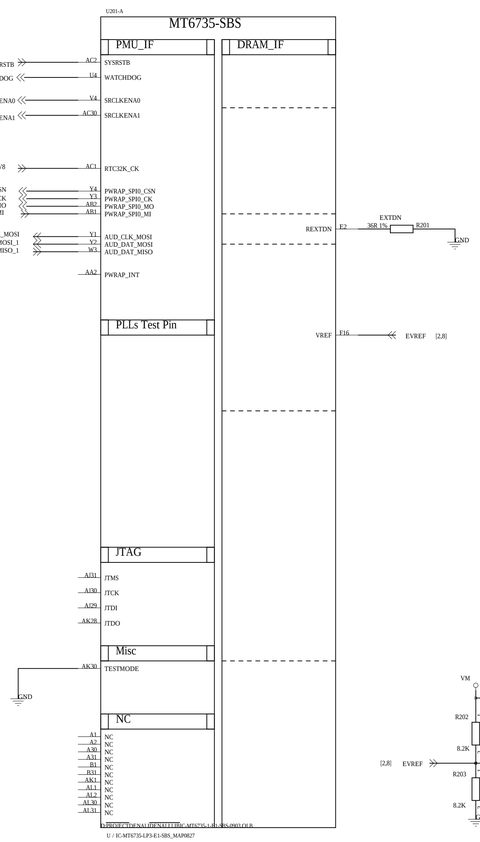
U201-A
MT6735-SBS
PMU_IF
DRAM_IF
[6] SYSRSTB AC2 SYSRSTB
[6] WATCHDOG U4 WATCHDOG
[6] SRCLKENA0 V4 SRCLKENA0
[6] SRCLKENA1 AC30 SRCLKENA1
[6] RTC32K1V8 AC1 RTC32K_CK
[6] PWRAP_SPI0_CSN Y4 PWRAP_SPI0_CSN
[6] PWRAP_SPI0_CK Y3 PWRAP_SPI0_CK
[6] PWRAP_SPI0_MO AB2 PWRAP_SPI0_MO
[6] PWRAP_SPI0_MI AB1 PWRAP_SPI0_MI
[6] AUD_CLK_MOSI Y1 AUD_CLK_MOSI
[6] AUD_DAT_MOSI_1 Y2 AUD_DAT_MOSI
[6] AUD_DAT_MISO_1 W3 AUD_DAT_MISO
AA2 PWRAP_INT
REXTDN F2 EXTDN 36R 1% R201 GND
PLLs Test Pin
VREF F16 EVREF [2,8]
JTAG
AJ31 JTMS
AJ30 JTCK
AJ29 JTDI
AK28 JTDO
Misc
AK30 TESTMODE
GND
NC
A1 NC
A2 NC
A30 NC
A31 NC
B1 NC
B31 NC
AK1 NC
AL1 NC
AL2 NC
AL30 NC
AL31 NC
VM
R202 8.2K
R203 8.2K
C201 100nF
C202 100nF
C203 1nF
[2,8] EVREF
GND
GND
GND
U / IC-MT6735-LP3-E1-SBS_MAP0827

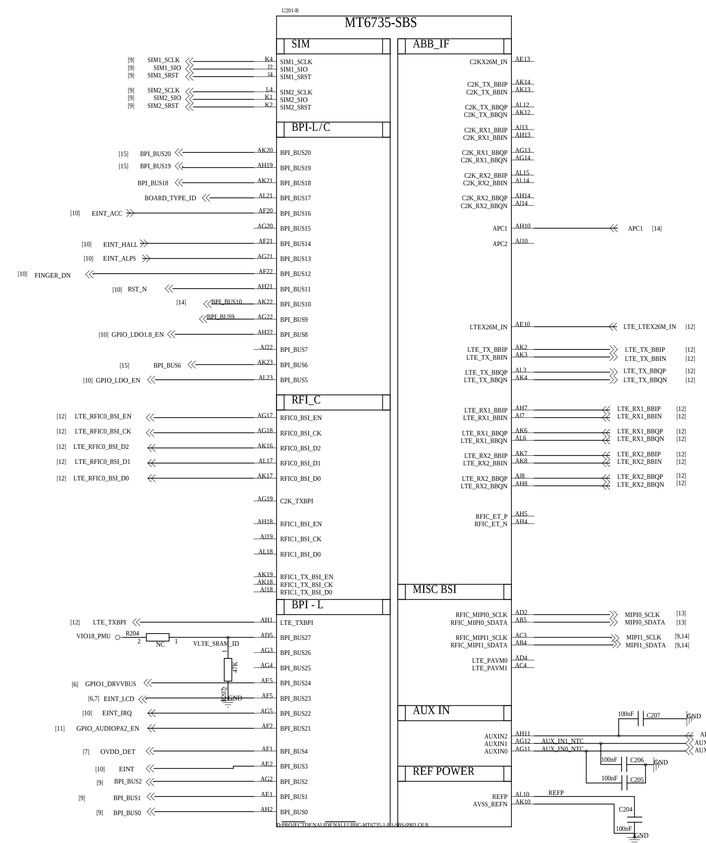
U201-B
MT6735-SBS
SIM
ABB_IF
[9] SIM1_SCLK K4 SIM1_SCLK
[9] SIM1_SIO J2 SIM1_SIO
[9] SIM1_SRST J4 SIM1_SRST
[9] SIM2_SCLK L4 SIM2_SCLK
[9] SIM2_SIO K1 SIM2_SIO
[9] SIM2_SRST K2 SIM2_SRST
C2KXO26M_IN AE13
C2K_TX_BBIP AK14
C2K_TX_BBIN AK13
C2K_TX_BBQP AL12
C2K_TX_BBQN AK12
C2K_RX1_BBIP AH13
C2K_RX1_BBIN AH13
C2K_RX1_BBQP AG13
C2K_RX1_BBQN AG14
C2K_RX2_BBIP AL15
C2K_RX2_BBIN AL14
C2K_RX2_BBQP AH14
C2K_RX2_BBQN AH14
APC1 AH10 APC1 [14]
APC2 AJ10
BPI-L/C
[15] BPI_BUS20 AK20 BPI_BUS20
[15] BPI_BUS19 AH19 BPI_BUS19
BPI_BUS18 AK21 BPI_BUS18
BOARD_TYPE_ID AL21 BPI_BUS17
[10] EINT_ACC AF20 BPI_BUS16
AG20 BPI_BUS15
[10] EINT_HALL AF21 BPI_BUS14
[10] EINT_ALPS AG21 BPI_BUS13
[10] FINGER_DN AF22 BPI_BUS12
[10] RST_N AH21 BPI_BUS11
[14] BPI_BUS10 AK22 BPI_BUS10
BPI_BUS9 AG22 BPI_BUS9
[10] GPIO_LDO1.8_EN AH22 BPI_BUS8
AJ22 BPI_BUS7
[15] BPI_BUS6 AK23 BPI_BUS6
[10] GPIO_LDO_EN AL23 BPI_BUS5
LTEXO26M_IN AE10 LTE_LTEXO26M_IN [12]
LTE_TX_BBIP AK2 LTE_TX_BBIP [12]
LTE_TX_BBIN AK3 LTE_TX_BBIN [12]
LTE_TX_BBQP AL3 LTE_TX_BBQP [12]
LTE_TX_BBQN AK4 LTE_TX_BBQN [12]
LTE_RX1_BBIP AH7 LTE_RX1_BBIP [12]
LTE_RX1_BBIN AJ7 LTE_RX1_BBIN [12]
LTE_RX1_BBQP AK6 LTE_RX1_BBQP [12]
LTE_RX1_BBQN AL6 LTE_RX1_BBQN [12]
LTE_RX2_BBIP AK7 LTE_RX2_BBIP [12]
LTE_RX2_BBIN AK8 LTE_RX2_BBIN [12]
LTE_RX2_BBQP AJ8 LTE_RX2_BBQP [12]
LTE_RX2_BBQN AH8 LTE_RX2_BBQN [12]
RFIC_ET_P AH5
RFIC_ET_N AH4
RFI_C
[12] LTE_RFIC0_BSI_EN AG17 RFIC0_BSI_EN
[12] LTE_RFIC0_BSI_CK AG18 RFIC0_BSI_CK
[12] LTE_RFIC0_BSI_D2 AK16 RFIC0_BSI_D2
[12] LTE_RFIC0_BSI_D1 AL17 RFIC0_BSI_D1
[12] LTE_RFIC0_BSI_D0 AK17 RFIC0_BSI_D0
AG19 C2K_TXBPI
AH18 RFIC1_BSI_EN
AJ19 RFIC1_BSI_CK
AL18 RFIC1_BSI_D0
AK19 RFIC1_TX_BSI_EN
AK18 RFIC1_TX_BSI_CK
AJ18 RFIC1_TX_BSI_D0
MISC BSI
RFIC_MIPI0_SCLK AD2 MIPI0_SCLK [13]
RFIC_MIPI0_SDATA AB5 MIPI0_SDATA [13]
RFIC_MIPI1_SCLK AC3 MIPI1_SCLK [9,14]
RFIC_MIPI1_SDATA AB4 MIPI1_SDATA [9,14]
LTE_PAVM0 AD4
LTE_PAVM1 AC4
BPI - L
[12] LTE_TXBPI AH1 LTE_TXBPI
VIO18_PMU R204 NC AD5 BPI_BUS27
VLTE_SRAM_ID 4K R205 GND AG3 BPI_BUS26
AG4 BPI_BUS25
[6] GPIO1_DRVVBUS AE5 BPI_BUS24
[6,7] EINT_LCD AF5 BPI_BUS23
[10] EINT_IRQ AG5 BPI_BUS22
[11] GPIO_AUDIOPA2_EN AF2 BPI_BUS21
[7] OVDD_DET AF1 BPI_BUS4
[10] EINT AF3 BPI_BUS3
[9] BPI_BUS2 AG2 BPI_BUS2
[9] BPI_BUS1 AF1 BPI_BUS1
[9] BPI_BUS0 AH2 BPI_BUS0
AUX IN
AUXIN2 AH11 ADC_LCD_ID [7]
AUXIN1 AG12 AUX_IN1_NTC AUX_IN1_NTC [13]
AUXIN0 AG11 AUX_IND_NTC AUX_IND_NTC [10]
100nF C207 GND
100nF C206 GND
100nF C205
REF POWER
REFP AL10 REFP
AVSS_REFN AK10
C204 100nF GND
U / IC-MT6735-LP3-E1-SBS_MAP0827

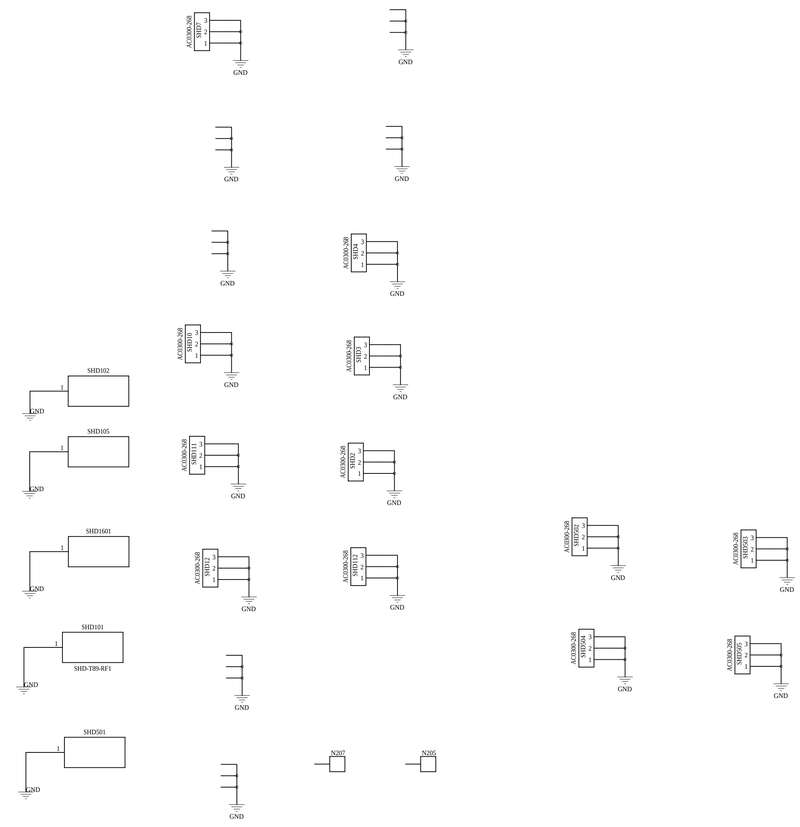
AC0300-208
SHD103
GND
GND
GND
GND
GND
GND
AC0300-208
SHD4
GND
GND
AC0300-208
SHD10
GND
AC0300-208
SHD3
GND
SHD102
GND
SHD105
GND
AC0300-208
SHD111
GND
AC0300-208
SHD2
GND
SHD1601
GND
AC0300-208
SHD112
GND
AC0300-208
SHD113
GND
AC0300-208
SHD101
SHD-TB9-RF1
GND
GND
AC0300-208
SHD502
GND
AC0300-208
SHD504
GND
AC0300-208
SHD505
GND
SHD501
GND
GND
N207
N205

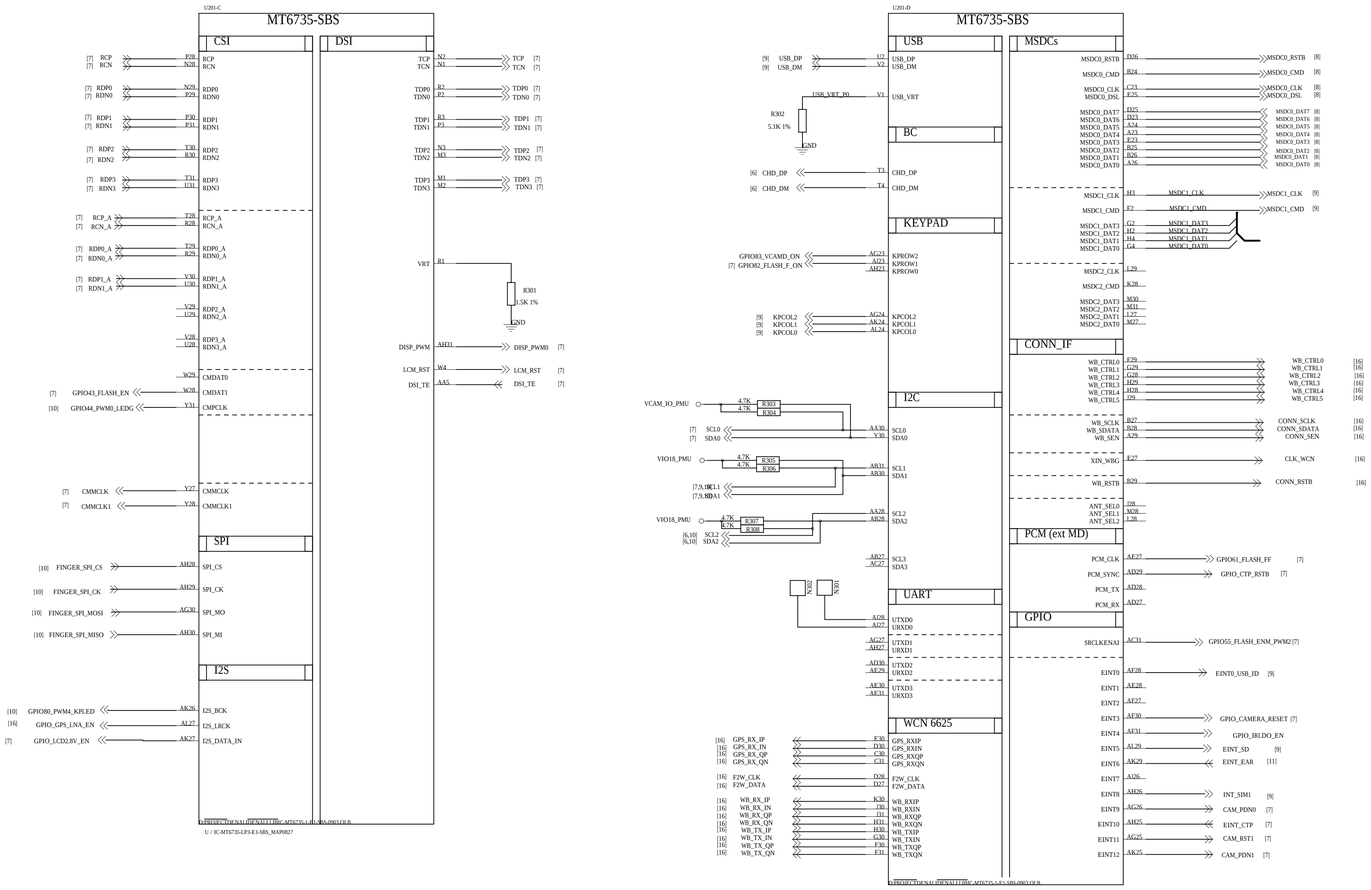
U201-C
MT6735-SBS
CSI
DSI
[7] RCP P28 RCP
[7] RCN N28 RCN
[7] RDP0 N29 RDP0
[7] RDN0 P29 RDN0
[7] RDP1 P30 RDP1
[7] RDN1 P31 RDN1
[7] RDP2 T30 RDP2
[7] RDN2 R30 RDN2
[7] RDP3 T31 RDP3
[7] RDN3 U31 RDN3
[7] RCP_A T28 RCP_A
[7] RCN_A R28 RCN_A
[7] RDP0_A T29 RDP0_A
[7] RDN0_A R29 RDN0_A
[7] RDP1_A V30 RDP1_A
[7] RDN1_A U30 RDN1_A
V29 RDP2_A
U29 RDN2_A
V28 RDP3_A
U28 RDN3_A
W29 CMDAT0
[7] GPIO43_FLASH_EN W28 CMDAT1
[10] GPIO44_PWM0_LEDG Y31 CMPCLK
[7] CMMCLK Y27 CMMCLK
[7] CMMCLK1 Y28 CMMCLK1
SPI
[10] FINGER_SPI_CS AH28 SPI_CS
[10] FINGER_SPI_CK AH29 SPI_CK
[10] FINGER_SPI_MOSI AG30 SPI_MO
[10] FINGER_SPI_MISO AH30 SPI_MI
I2S
[10] GPIO80_PWM4_KPLED AK26 I2S_BCK
[16] GPIO_GPS_LNA_EN AL27 I2S_LRCK
[7] GPIO_LCD2.8V_EN AK27 I2S_DATA_IN
TCP N2 TCP [7]
TCN N1 TCN [7]
TDP0 R2 TDP0 [7]
TDN0 P2 TDN0 [7]
TDP1 R3 TDP1 [7]
TDN1 P3 TDN1 [7]
TDP2 N3 TDP2 [7]
TDN2 M3 TDN2 [7]
TDP3 M1 TDP3 [7]
TDN3 M2 TDN3 [7]
VRT R1
R301
1.5K 1%
GND
DISP_PWM AH31 DISP_PWM0 [7]
LCM_RST W4 LCM_RST [7]
DSI_TE AA5 DSI_TE [7]
© PROTECTED(NAU,IPENAULT,HBC-MT6735-LP3-E1-SBS-0903.OF.B
U / IC-MT6735-LP3-E1-SBS_MAP0827
U201-D
MT6735-SBS
USB
MSDCs
[9] USB_DP U2 USB_DP
[9] USB_DM V2 USB_DM
USB_VRT_B0 V1 USB_VRT
R302
5.1K 1%
GND
BC
[6] CHD_DP T3 CHD_DP
[6] CHD_DM T4 CHD_DM
KEYPAD
GPIO83_VCAMD_ON AG23 KPROW2
[7] GPIO82_FLASH_F_ON AD23 KPROW1
AH23 KPROW0
[9] KPCOL2 AG24 KPCOL2
[9] KPCOL1 AK24 KPCOL1
[9] KPCOL0 AL24 KPCOL0
I2C
VCAM_IO_PMU
4.7K R303
4.7K R304
[7] SCL0 AA30 SCL0
[7] SDA0 Y30 SDA0
VIO18_PMU
4.7K R305
4.7K R306
AR31 SCL1
AR30 SDA1
[7,9,10] SCL1
[7,9,10] SDA1
VIO18_PMU
4.7K R307
4.7K R308
AA28 SCL2
AR28 SDA2
[6,10] SCL2
[6,10] SDA2
AR27 SCL3
AC27 SDA3
NR02
NR01
UART
AD8 UTXD0
AJ27 URXD0
AG27 UTXD1
AH27 URXD1
AD30 UTXD2
AE29 URXD2
AE30 UTXD3
AE31 URXD3
WCN 6625
[16] GPS_RX_IP F30 GPS_RXIP
[16] GPS_RX_IN D30 GPS_RXIN
[16] GPS_RX_QP C30 GPS_RXQP
[16] GPS_RX_QN C31 GPS_RXQN
[16] F2W_CLK D28 F2W_CLK
[16] F2W_DATA D27 F2W_DATA
[16] WB_RX_IP K30 WB_RXIP
[16] WB_RX_IN J30 WB_RXIN
[16] WB_RX_QP J31 WB_RXQP
[16] WB_RX_QN H31 WB_RXQN
[16] WB_TX_IP H30 WB_TXIP
[16] WB_TX_IN G30 WB_TXIN
[16] WB_TX_QP F30 WB_TXQP
[16] WB_TX_QN F31 WB_TXQN
MSDC0_RSTB D26 MSDC0_RSTB [8]
MSDC0_CMD B24 MSDC0_CMD [8]
MSDC0_CLK C23 MSDC0_CLK [8]
MSDC0_DSL E25 MSDC0_DSL [8]
MSDC0_DAT7 D25 MSDC0_DAT7 [8]
MSDC0_DAT6 D23 MSDC0_DAT6 [8]
MSDC0_DAT5 A24 MSDC0_DAT5 [8]
MSDC0_DAT4 A23 MSDC0_DAT4 [8]
MSDC0_DAT3 E23 MSDC0_DAT3 [8]
MSDC0_DAT2 B25 MSDC0_DAT2 [8]
MSDC0_DAT1 B26 MSDC0_DAT1 [8]
MSDC0_DAT0 A26 MSDC0_DAT0 [8]
MSDC1_CLK H3 MSDC1_CLK [9]
MSDC1_CMD F2 MSDC1_CMD [9]
MSDC1_DAT3 G2 MSDC1_DAT3
MSDC1_DAT2 H2 MSDC1_DAT2
MSDC1_DAT1 H4 MSDC1_DAT1
MSDC1_DAT0 G4 MSDC1_DAT0
MSDC2_CLK L29
MSDC2_CMD K28
MSDC2_DAT3 M30
MSDC2_DAT2 M31
MSDC2_DAT1 L27
MSDC2_DAT0 M27
CONN_IF
WB_CTRL0 F29 WB_CTRL0 [16]
WB_CTRL1 G29 WB_CTRL1 [16]
WB_CTRL2 G28 WB_CTRL2 [16]
WB_CTRL3 H29 WB_CTRL3 [16]
WB_CTRL4 H28 WB_CTRL4 [16]
WB_CTRL5 J29 WB_CTRL5 [16]
WB_SCLK B27 CONN_SCLK [16]
WB_SDATA A28 CONN_SDATA [16]
WB_SEN A29 CONN_SEN [16]
XIN_WBG E27 CLK_WCN [16]
WB_RSTB B29 CONN_RSTB [16]
ANT_SEL0 J28
ANT_SEL1 M28
ANT_SEL2 L28
PCM (ext MD)
PCM_CLK AE27 GPIO61_FLASH_FF [7]
PCM_SYNC AD29 GPIO_CTP_RSTB [7]
PCM_TX AD28
PCM_RX AD27
GPIO
SRCLKENAI AC31 GPIO55_FLASH_ENM_PWM2 [7]
EINT0 AF28 EINT0_USB_ID [9]
EINT1 AE28
EINT2 AF27
EINT3 AF30 GPIO_CAMERA_RESET [7]
EINT4 AF31 GPIO_IRLDO_EN
EINT5 AL29 EINT_SD [9]
EINT6 AK29 EINT_EAR [11]
EINT7 AD6
EINT8 AH26 INT_SIM1 [9]
EINT9 AG26 CAM_PDN0 [7]
EINT10 AH25 EINT_CTP [7]
EINT11 AG25 CAM_RST1 [7]
EINT12 AK25 CAM_PDN1 [7]
© PROTECTED(NAU,IPENAULT,HBC-MT6735-LP3-E1-SBS-0903.OF.B
U / IC-MT6735-LP3-E1-SBS_MAP0827

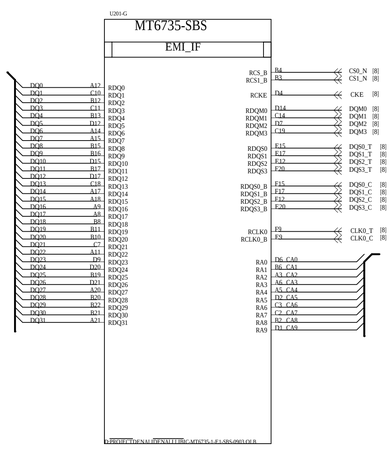
U201-G
MT6735-SBS
EMI_IF
DQ0 A17 RDQ0
DQ1 C10 RDQ1
DQ2 B17 RDQ2
DQ3 C11 RDQ3
DQ4 B13 RDQ4
DQ5 D17 RDQ5
DQ6 A14 RDQ6
DQ7 A15 RDQ7
DQ8 B15 RDQ8
DQ9 B16 RDQ9
DQ10 D15 RDQ10
DQ11 B17 RDQ11
DQ12 D17 RDQ12
DQ13 C18 RDQ13
DQ14 A17 RDQ14
DQ15 A18 RDQ15
DQ16 A9 RDQ16
DQ17 A8 RDQ17
DQ18 B8 RDQ18
DQ19 B11 RDQ19
DQ20 B10 RDQ20
DQ21 C7 RDQ21
DQ22 A11 RDQ22
DQ23 D9 RDQ23
DQ24 D20 RDQ24
DQ25 B19 RDQ25
DQ26 D21 RDQ26
DQ27 A20 RDQ27
DQ28 B20 RDQ28
DQ29 B22 RDQ29
DQ30 B21 RDQ30
DQ31 A21 RDQ31
RCS_B B4 CS0_N [8]
RCS1_B B3 CS1_N [8]
RCKE D4 CKE [8]
RDQM0 D14 DQM0 [8]
RDQM1 C14 DQM1 [8]
RDQM2 D2 DQM2 [8]
RDQM3 C19 DQM3 [8]
RDQS0 E15 DQS0_T [8]
RDQS1 E17 DQS1_T [8]
RDQS2 F12 DQS2_T [8]
RDQS3 F20 DQS3_T [8]
RDQS0_B F15 DQS0_C [8]
RDQS1_B F17 DQS1_C [8]
RDQS2_B F12 DQS2_C [8]
RDQS3_B F20 DQS3_C [8]
RCLK0 F9 CLK0_T [8]
RCLK0_B F3 CLK0_C [8]
RA0 D6 CA0
RA1 B6 CA1
RA2 A3 CA2
RA3 A6 CA3
RA4 A5 CA4
RA5 D2 CA5
RA6 C3 CA6
RA7 C2 CA7
RA8 B2 CA8
RA9 D1 CA9
U / IC-MT6735-LF3-E1-SBS_MAP0027

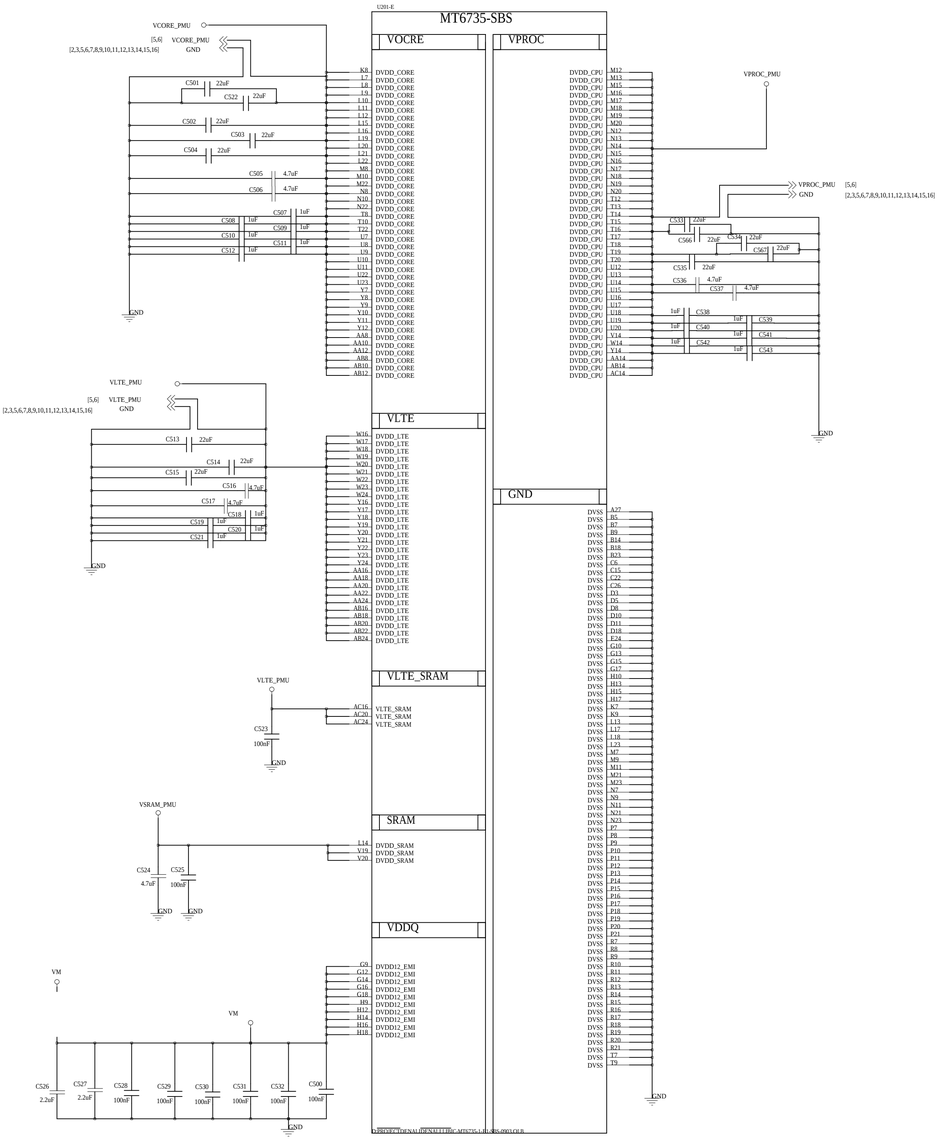

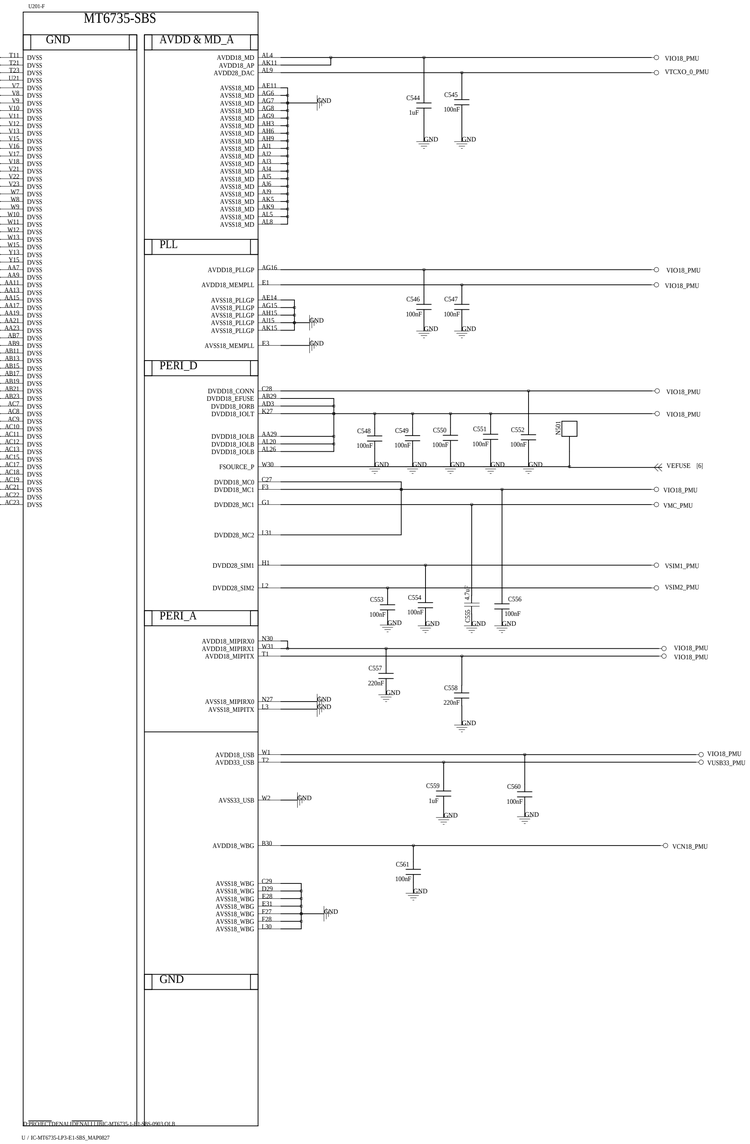

U / IC-MT6735-LP3-E1-SBS_MAP0827

U / IC-MT6735-LP3-E1-SBS_MAP0827

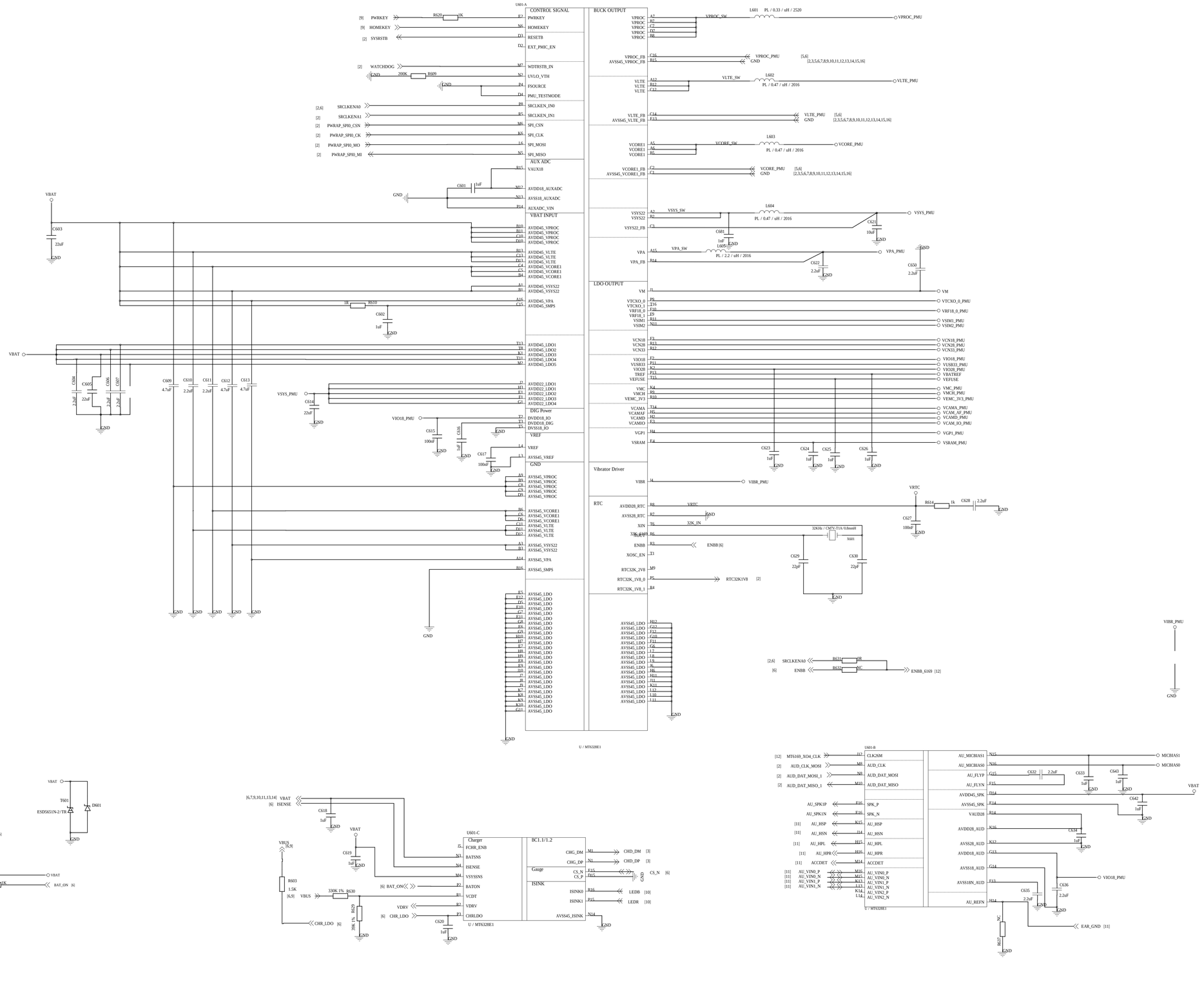
U601-A
CONTROL SIGNAL
PWRKEY
HOMEKEY
RESETB
EXT_PMIC_EN
WDTRSTB_IN
UVLO_VTH
FSOURCE
PMU_TESTMODE
SRCLKEN_IN0
SRCLKEN_IN1
SPI_CSN
SPI_CLK
SPI_MOSI
SPI_MISO
AUX ADC
VAUXI8
AVDD18_AUXADC
AVSS18_AUXADC
AUXADC_VIN
VBAT INPUT
AVDD45_VPROC
AVDD45_VLTE
AVDD45_VCORE1
AVDD45_VCORE1
AVDD45_VSYS22
AVDD45_VSYS22
AVDD45_VPA
AVDD45_SMPS
AVDD45_LDO1
AVDD45_LDO2
AVDD45_LDO3
AVDD45_LDO4
AVDD45_LDO5
AVDD22_LDO1
AVDD22_LDO1
AVDD22_LDO2
AVDD22_LDO3
AVDD22_LDO4
DIG Power
DVDD18_IO
DVDD18_DIG
DVSS18_IO
VREF
AVSS45_VREF
GND
AVSS45_VPROC
AVSS45_VCORE1
AVSS45_VLTE
AVSS45_VSYS22
AVSS45_VPA
AVSS45_SMPS
AVSS45_LDO
U / MT6328E1
BUCK OUTPUT
VPROC
VPROC_SW
L601 PL / 0.33 / uH / 2520
VPROC_PMU
VPROC_FB
AVSS45_VPROC_FB
[5,6]
[2,3,5,6,7,8,9,10,11,12,13,14,15,16]
VLTE
VLTE_SW
L602
PL / 0.47 / uH / 2016
VLTE_PMU
VLTE_FB
AVSS45_VLTE_FB
VCORE1
VCORE_SW
L603
PL / 0.47 / uH / 2016
VCORE_PMU
VCORE1_FB
AVSS45_VCORE1_FB
VSYS22
VSYS_SW
L604
PL / 0.47 / uH / 2016
VSYS_PMU
VSYS22_FB
VPA
VPA_SW
L605
PL / 2.2 / uH / 2016
VPA_PMU
VPA_FB
LDO OUTPUT
VM
VTCXO_0
VTCXO_1
VRF18_0
VRF18_1
VSIM1
VSIM2
VCN18
VCN28
VCN33
VIO18
VUSB33
VIO28
TREF
VEFUSE
VMC
VMCH
VEMC_3V3
VCAMA
VCAMAF
VCAMD
VCAMIO
VGP1
VSRAM
VTCXO_0_PMU
VRF18_0_PMU
VSIM1_PMU
VSIM2_PMU
VCN18_PMU
VCN28_PMU
VCN33_PMU
VIO18_PMU
VUSB33_PMU
VIO28_PMU
VBATREF
VMC_PMU
VMCH_PMU
VEMC_3V3_PMU
VCAMA_PMU
VCAM_AF_PMU
VCAMD_PMU
VCAM_IO_PMU
VGP1_PMU
VSRAM_PMU
Vibrator Driver
VIBR_PMU
RTC
AVDD28_RTC
AVSS28_RTC
XIN
XOUT
ENBB
XOSC_EN
RTC32K_2V8
RTC32K_1V8_0
RTC32K_1V8_1
VRTC
32K_IN
32KHz / CMTY-T1A/0.8mmH
X601
ENBB [6]
RTC32K1V8 [2]
SRCLKENA0 [2,6]
ENBB [6]
ENBB_6169 [12]
VIBR_PMU
GND
VBAT
CON601
AXF461500
N602
N603
N604
VBATREF [6]
BAT_ON [6]
CS_N [6]
R608
0.01R_1206
T601
ESD5651N-2/TR
D601
U601-C
Charger
FCHR_ENB
BATSNS
ISENSE
VSYSSNS
BATON
VCDT
VDRV
CHRLDO
U / MT6328E1
BC1.1/1.2
CHG_DM
CHG_DP
Gauge
CS_N
CS_P
ISINK
ISINK0
ISINK1
AVSS45_ISINK
LEDB [10]
LEDR [10]
[6,7,9,10,11,13,14] VBAT
[6] ISENSE
[6] BAT_ON
[6] CHR_LDO
VBUS [6,9]
R603 1.5K
R630 330K 1%
R629 39K 1%
U601-B
CLK26M
AUD_CLK
AUD_DAT_MOSI
AUD_DAT_MISO
SPK_P
SPK_N
AU_HSP
AU_HSN
AU_HPL
AU_HPR
ACCDET
AU_VIN0_P
AU_VIN0_N
AU_VIN1_P
AU_VIN1_N
AU_VIN2_P
AU_VIN2_N
U / MT6328E1
MT6169_XO4_CLK [12]
AUD_CLK_MOSI [2]
AUD_DAT_MOSI_1 [2]
AUD_DAT_MISO_1 [2]
AU_SPK1P
AU_SPK1N
[11] AU_HSP
[11] AU_HSN
[11] AU_HPL
[11] AU_HPR
[11] ACCDET
[11] AU_VIN0_P
[11] AU_VIN0_N
[11] AU_VIN1_P
[11] AU_VIN1_N
AU_MICBIAS1
AU_MICBIAS0
AU_FLYP
AU_FLYN
AVDD45_SPK
AVSS45_SPK
VAUD28
AVDD28_AUD
AVSS28_AUD
AVDD18_AUD
AVSS18_AUD
AVSS18N_AUD
AU_REFN
MICBIAS1
MICBIAS0
VIO18_PMU
EAR_GND [11]

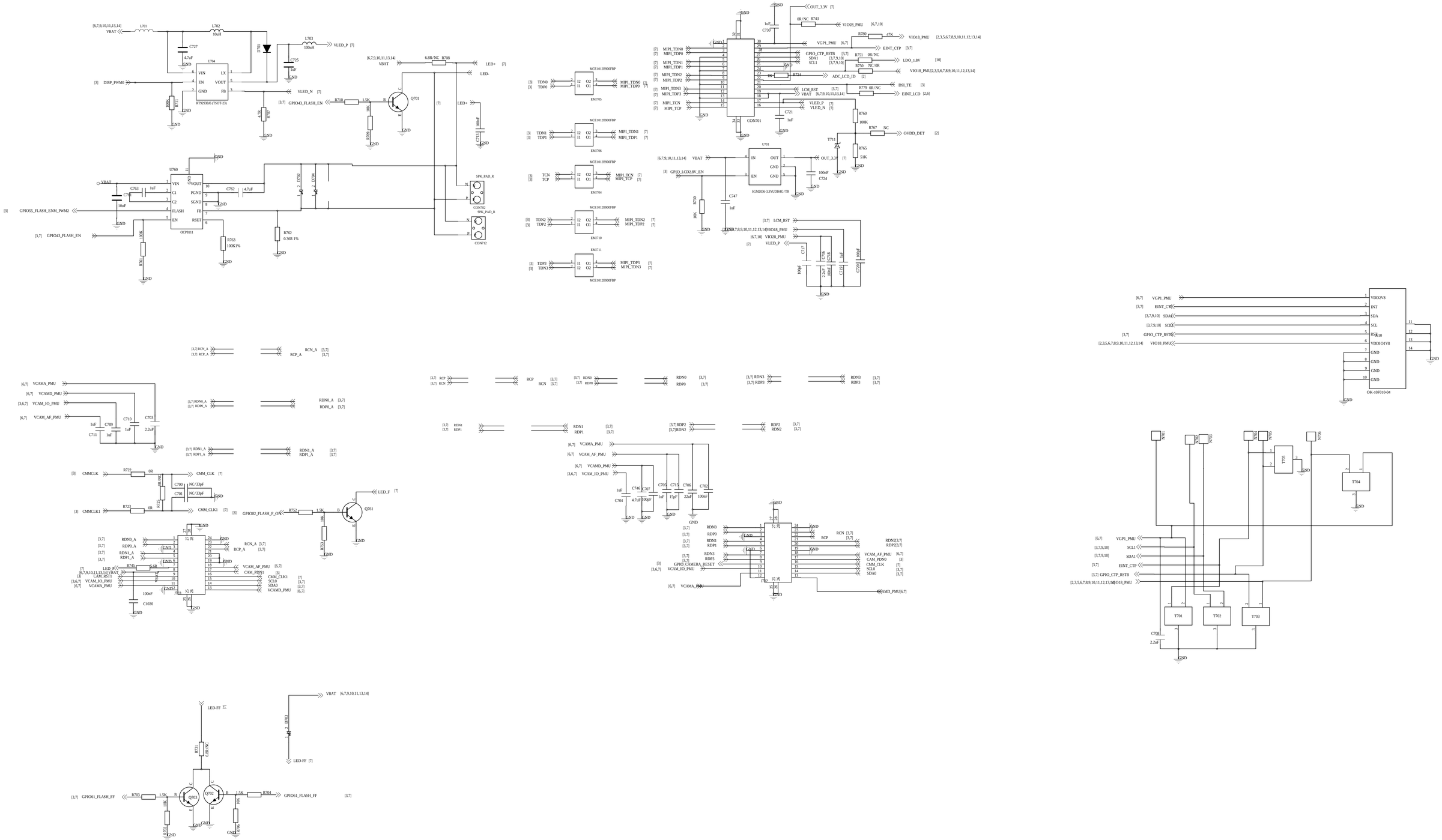
VBAT
L701
L702
10uH
L703
100uH
VLED_P
C727
4.7uF
U704
VIN
EN
GND
LX
VOUT
FB
RT9293BA6 (TSOT-23)
D701
C725
1uF
DISP_PWM0
VLED_N
R711
100K
R707
4.7K
GPIO43_FLASH_EN
R710
1.5K
Q701
R709
LED+
LED-
6.8R/NC R708
C713
100nF
U760
VOUT
PGND
SGND
FLASH
RSET
OCP8111
C763
1uF
C761
10uF
C762
4.7uF
D702
D704
GPIO55_FLASH_ENM_PWM2
R714
R763
100K1%
R762
0.36R 1%
SPK_PAD_R
CON702
CON712
OUT_3.3V
0R/NC R743
VIO28_PMU
C730
VGPI_PMU
R780
47K
VIO18_PMU
EINT_CTP
GPIO_CTP_RSTB
SDA1
SCL1
R751 0R/NC
LDO_1.8V
R750 NC/0R
ADC_LCD_ID
LCM_RST
R779 0R/NC
DSI_TE
EINT_LCD
VLED_P
VLED_N
C721
1uF
CON701
R760
100K
R767 NC
OVDD_DET
T711
R765
51K
U701
IN
OUT
EN
GND
SGM2036-3.3YUDH4G/TR
C724
100nF
GPIO_LCD2.8V_EN
R730
10K
C747
1uF
C717
C716
2.2uF
C718
1uF
C719
100nF
C720
100nF
MIPI_TDN0
MIPI_TDP0
MIPI_TDN1
MIPI_TDP1
MIPI_TDN2
MIPI_TDP2
MIPI_TDN3
MIPI_TDP3
MIPI_TCN
MIPI_TCP
MCE10128908FBP
EM705
EM706
EM704
EM710
EM711
RCN_A
RCP_A
RDN0_A
RDP0_A
RDN1_A
RDP1_A
RCP
RCN
RDN0
RDP0
RDN1
RDP1
RDN3
RDP3
RDP2
RDN2
VGPI_PMU
EINT_CTP
SDA1
SCL1
GPIO_CTP_RSTB
VIO28_PMU
VIO18_PMU
VDD2V8
INT
SDA
SCL
RSTB
VDDIO1V8
GND
OK-10F010-04
VCAMA_PMU
VCAMD_PMU
VCAM_IO_PMU
VCAM_AF_PMU
C709
1uF
C710
1uF
C703
2.2uF
C711
1uF
CMMCLK
R722
0R
CMM_CLK
R725
0R/NC
C700
NC/33pF
C701
NC/33pF
CMMCLK1
R723
0R
CMM_CLK1
GPIO82_FLASH_F_OK
R752
1.5K
Q761
LED_F
R713
10K
LED_K
R745
6.8R
CAM_RST1
VCAM_IO_PMU
VCAMA_PMU
C1020
100nF
CAM_PDN1
CAM_CLK1
SCL0
SDA0
VCAMD_PMU
GPIO_CAMERA_RESET
VCAM_AF_PMU
CAM_PDN0
CMM_CLK
SDA0
RDN23,7]
RDP23,7]
C746
1uF
C704
4.7uF
C707
100pF
C705
1uF
C715
15pF
C706
22uF
C702
100nF
N701
N702
N703
N704
N705
N706
T705
T704
T701
T702
T703
C708
2.2uF
LED-FF
R721
6.8R/NC
D703
GPIO61_FLASH_FF
R703
1.5K
Q703
Q702
R704
R702
R706

U801
Power
eMMC
LP-DDR3
DVDD18_EMI
VIO18_PMU
0R
R801
DVDD18_EMI
VM
C801
2.2uF
C804
2.2uF
C805
100nF
C806
100nF
C807
100nF
C808
100nF
C802
100nF
C803
1uF
GND
2400
R817
2400
R818
VEMC_3V3_PMU
VIO18_PMU
C809
100nF
C810
1uF
C811
4.7uF
C812
220nF
C813
4.7uF
C814
100nF
MSDC0_DSL
MSDC0_CLK
MSDC0_RSTB
MSDC0_CMD
MSDC0_DAT7
MSDC0_DAT6
MSDC0_DAT5
MSDC0_DAT4
MSDC0_DAT3
MSDC0_DAT2
MSDC0_DAT1
MSDC0_DAT0
CS0_N
CS1_N
CKE
CLK0_T
CLK0_C
DQS0_T
DQS0_C
DQS1_T
DQS1_C
DQS2_T
DQS2_C
DQS3_T
DQS3_C
DQM0
DQM1
DQM2
DQM3
EVREF
C815
1uF
C816
100nF
U / H9TQ17AB3TMCUR-KUM / FBGA221

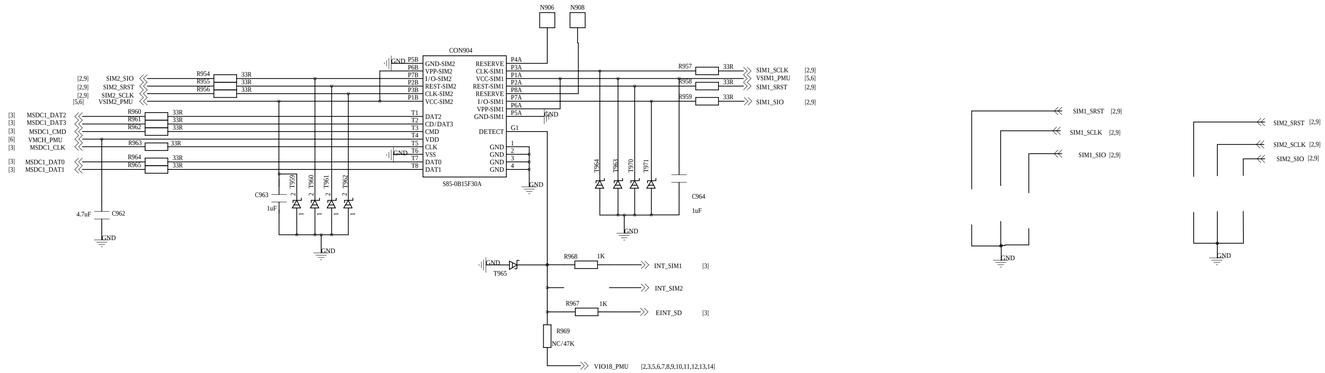
CON904
SIM2_SIO
SIM2_SRST
SIM2_SCLK
VSIM2_PMU
MSDC1_DAT2
MSDC1_DAT3
MSDC1_CMD
VMCH_PMU
MSDC1_CLK
MSDC1_DAT0
MSDC1_DAT1
SIM1_SCLK
VSIM1_PMU
SIM1_SRST
SIM1_SIO
INT_SIM1
INT_SIM2
EINT_SD
VIO18_PMU
SIM1_SRST
SIM1_SCLK
SIM1_SIO
SIM2_SRST
SIM2_SCLK
SIM2_SIO

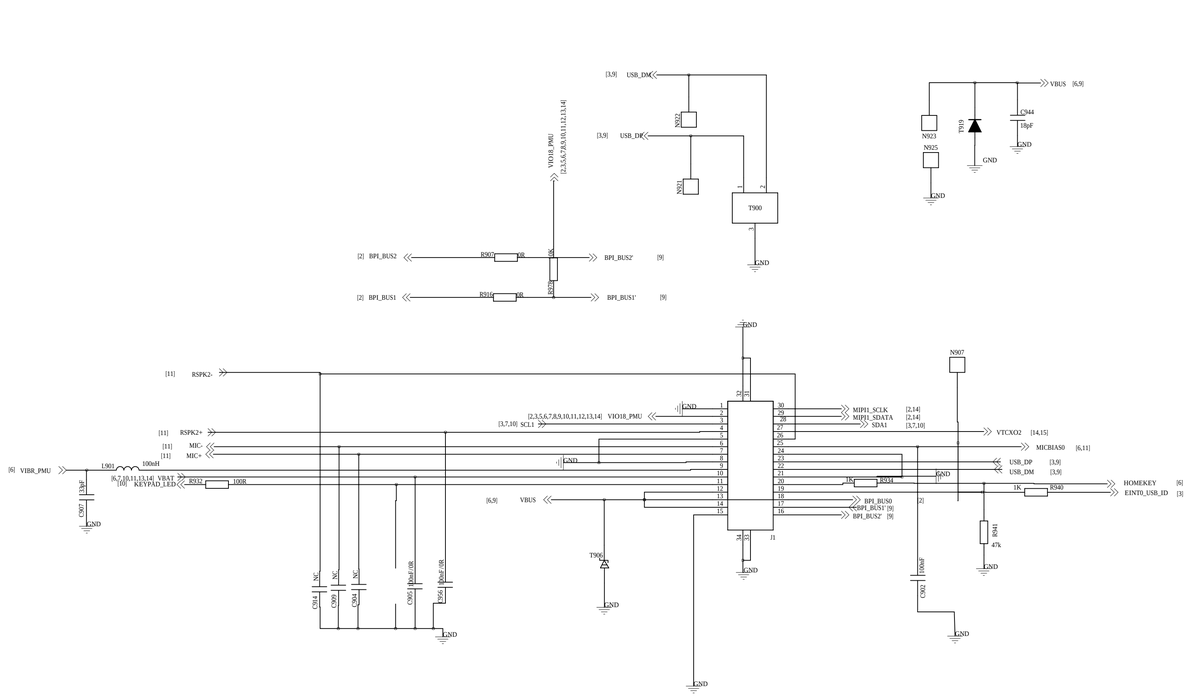
USB_DM
USB_DP
VIO18_PMU
VBUS
BPI_BUS2
BPI_BUS1
RSPK2-
RSPK2+
MIC-
MIC+
VIBR_PMU
VBAT
KEYPAD_LED
SCL1
SDA1
VTCXO2
MICBIAS0
HOMEKEY
EINT0_USB_ID
BPI_BUS0
BPI_BUS1'
BPI_BUS2'
J1

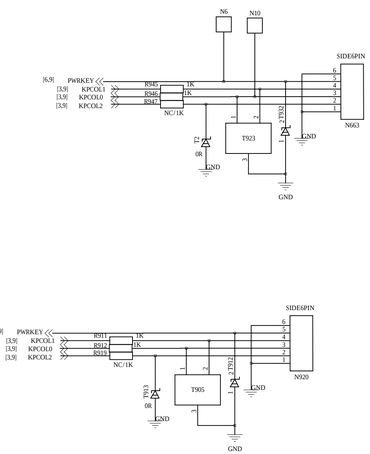
SIDE6PIN
PWRKEY
KPCOL1
KPCOL0
KPCOL2
N663
N920

DEVICE	I2C ADDRESS 8bit
EXTI2-1609	0XAC
BMA222E	0xF8
MC3430	0x98
BMC156	G:0x20; M:0x24

7bit

SDO	I2C address
GND	0X68
VDDIO	0X69

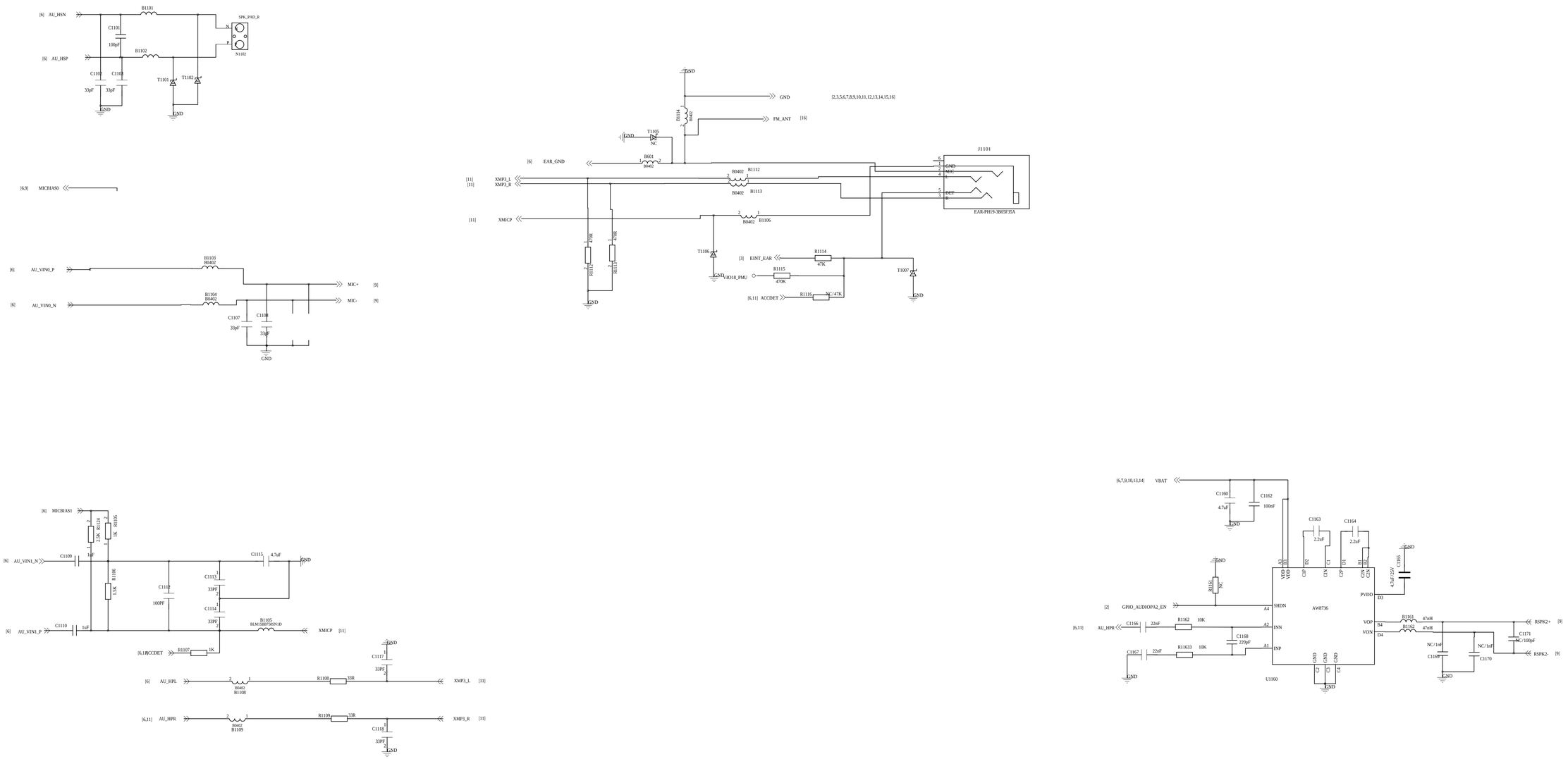
[6] AU_HSN
B1101
SPK_PAD_R
C1101
100pF
N
P
N1102
[6] AU_HSP
B1102
C1102
C1103
33pF
33pF
T1101
T1102
GND
GND
[6,9] MICBIAS0
[6] AU_VIN0_P
B1103
B0402
MIC+ [9]
[6] AU_VIN0_N
B1104
B0402
MIC- [9]
C1107
33pF
C1108
33pF
GND
GND
GND
GND
[2,3,5,6,7,8,9,10,11,12,13,14,15,16]
B1114
0R
FM_ANT [16]
T1105
NC
[6] EAR_GND
B601
B0402
J1101
[11] XMP3_L
[11] XMP3_R
B0402
B1112
B0402
B1113
GND
MIC
DET
EAR-PH19-3805F35A
[11] XMICP
B0402
B1106
4.70R
4.70R
R1112
R1113
T1106
[3] EINT_EAR
R1114
47K
GND
VIO18_PMU
R1115
470K
T1007
[6,11] ACCDET
R1116
NC/47K
GND
GND
[6] MICBIAS1
R1104
2.5K
R1105
1K
[6] AU_VIN1_N
C1109
1uF
R1106
1.5K
C1112
100PF
C1113
33PF
C1114
33PF
C1115
4.7uF
GND
[6] AU_VIN1_P
C1110
1uF
B1105
BLM18BF58RNID
XMICP [11]
[6,11] ACCDET
R1107
1K
GND
C1117
33PF
[6] AU_HPL
B0402
B1108
R1108
33R
XMP3_L [11]
[6,11] AU_HPR
B0402
B1109
R1109
33R
XMP3_R [11]
C1118
33PF
GND
[6,7,9,10,13,14] VBAT
C1160
4.7uF
C1162
100nF
GND
C1163
2.2uF
C1164
2.2uF
GND
C1165
4.7uF/25V
GND
R1163
NC
[2] GPIO_AUDIOPA2_EN
[6,11] AU_HPR
C1166
22nF
R1162
10K
C1168
220pF
C1167
22nF
R1163
10K
GND
AW8736
U1160
VBAT
VDD
VDD
C1P
C1N
C2P
C2N
C2N
PVDD
SHDN
INN
INP
VOP
VON
GND
GND
GND
GND
GND
GND
GND
[6,11] AU_HPR
R1161
47nH
R1162
47nH
RSPK2+ [9]
RSPK2- [9]
C1171
NC/100pF
NC/1nF
C1169
NC/1nF
C1170
GND

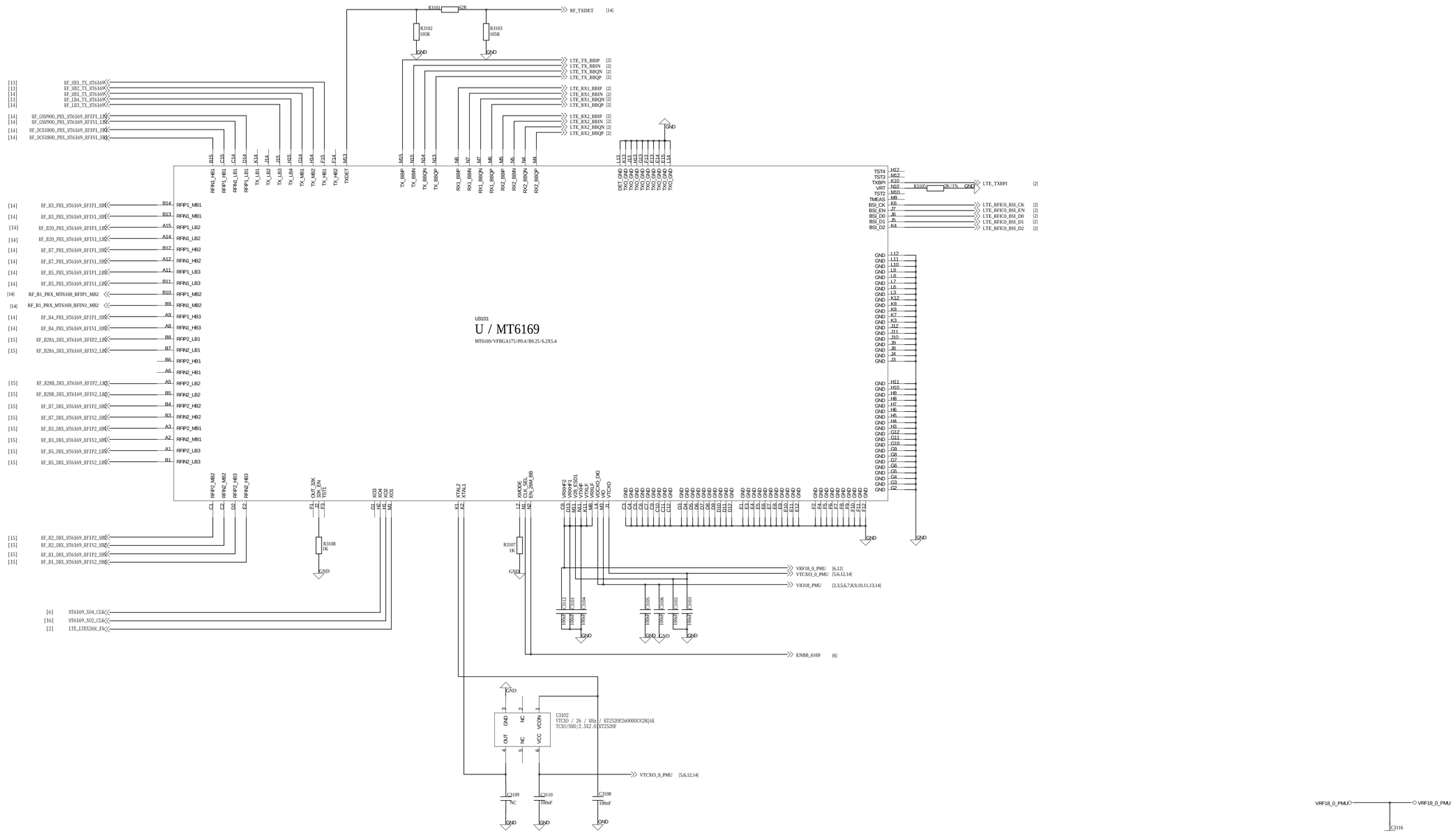
U3101
U / MT6169
MT6169/VFBGA175/P0.4/B0.25/6.2X5.4
U3102
VTCXO / 26 / MHz / KT2520F26000DCF28QAX
TCXO/SMD/2.5X2.0/KT2520F
R3101 52R
R3102 10SR
R3103 10SR
R3107 1K
R3108 1K
R3105 2K/1%
C3109 NC
C3110 100nF
C3108 100nF
C3116 2.2uF/0402
RF_TXDET [14]
LTE_TX_BBIP [2]
LTE_TX_BBIN [2]
LTE_TX_BBQN [2]
LTE_TX_BBQP [2]
LTE_RX1_BBIP [2]
LTE_RX1_BBIN [2]
LTE_RX1_BBQN [2]
LTE_RX1_BBQP [2]
LTE_RX2_BBIP [2]
LTE_RX2_BBIN [2]
LTE_RX2_BBQN [2]
LTE_RX2_BBQP [2]
LTE_TXBPI [2]
LTE_RFIO3_BSI_CK [2]
LTE_RFIO3_BSI_EN [2]
LTE_RFIO3_BSI_D0 [2]
LTE_RFIO3_BSI_D1 [2]
LTE_RFIO3_BSI_D2 [2]
VRF18_0_PMU [6,12]
VTCXO_0_PMU [5,6,12,14]
VIO18_PMU [2,3,5,6,7,8,9,10,11,13,14]
ENB8_6169 [6]
MT6169_3D4_CLK
MT6169_3D2_CLK
LTE_LTBX26M_EN

U3203
SKY77643
LP/HP PA
L3218 3nH
RF_B28B_PA_DPX [14]
C3297 NC
C3296 NC
L3216 3nH
RF_B28A_PA_DPX [14]
C3295 NC
C3294 NC
L3217 3nH
RF_B5_PA_DPX [14]
C3257 NC
C3260 NC
C3207 3nH
RF_B1_PA_DPX [14]
C3211 NC
C3210 NC
C3206 3nH
RF_B4_PA_DPX [14]
C3204 NC
C3201 NC
L3206 3nH
RF_B3_PA_DPX [14]
C3216 NC
C3215 NC
VPA_PMU [6,13]
VPA_PMU [6,13]
VPA_PMU [6,13]
C3223 100nF
C3243 100pF
C3245 100pF
C3242 100pF
C3205 1uF
L3209 3nH
RF_B7_PA_DPX [14]
C3289 NC
C3255 NC
[12] RF_LB4_TX_MT6169
C3225 33pF
R3214 9.1nH
R3226 1.3pF
C3226 1.3pF
[12] RF_MB2_TX_MT6169
C3217 33pF
L3215 4.7nH
C3254 1.0pF
C3228 1.0pF
[6,7,9,10,11,14] VBAT
C3248 10mF
C3249 100pF
[2] MIPI0_SCLK
[2] MIPI0_SDATA
[2,3,5,6,7,8,9,10,11,12,13,14] VIO18_PMU
[12] RF_HB1_TX_MT6169
R3209 0Ω
R3210 0Ω
C3256 8.2pF
R3230 3.6nH
R3231 1.2pF
R3201 1.2pF
C3241 1nF
GND
15 GND
14 GND
13 RFIN_L
12 RFIN_M
11 NC
10 NC
9 NC
8 VBAT
7 VIO
6 SCLK
5 SDATA
4 NC
3 RFIN_H
2 GND
1 GND
L6 L7 L8 L9 L10 L11 L12 L13 MB2
GND 22
MB3 23
GND 24
MB5 25
MB4 26
GND 27
VCC2_2 28
VCC1 29
VCC2 30
GND 31
B34/29 32
HB1 33
GND 34
HB2 35
GND 36
S1 GND
S2 GND
S3 GND
A8 GND
A7 GND
A6 GND
A5 GND
A4 GND
A3 GND
A2 RC2
A1 RC1
A0 GND
B0 HB4
B1 HB5
B2 HB3

VIO18_PMU
R3232
390K 1%
[2] AUX_IN1_NTC
NTC3201
NTC / NTCG064EF104F / 0201
R0201
GND

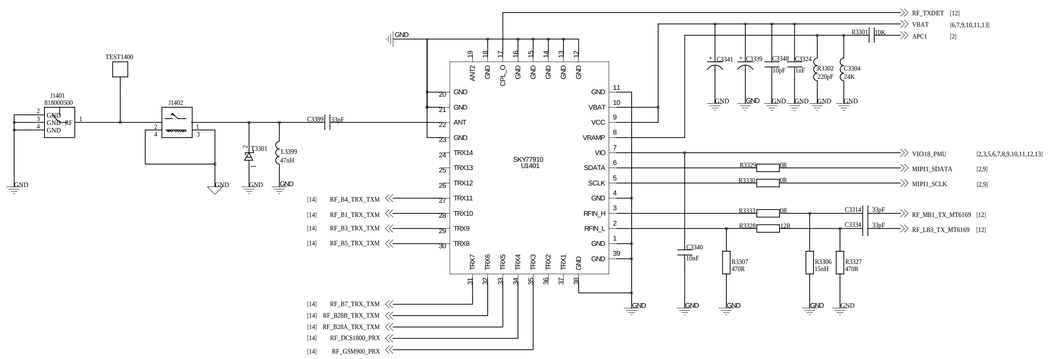
J1401
818000500
TEST1400
J1402
C3399 33pF
L3399
47nH
L3301
SKY77910
U1401
RF_TXDET [12]
VBAT [6,7,9,10,11,13]
APC1 [2]
R3301 10K
VIO18_PMU [2,3,5,6,7,8,9,10,11,12,13]
MIPI1_SDATA [2,9]
MIPI1_SCLK [2,9]
RF_MB1_TX_MT6169 [12]
RF_LB3_TX_MT6169 [12]
C3314 33pF
C3334 33pF
C3341
C3339
C3348 18pF
C3324 12pF
R3302 220pF
C3304 24K
C3340 18pF
R3307 470R
R3306 15nH
R3327 470R
R3329 0R
R3330 0R
R3333 0R
R3328 0R
RF_B4_TRX_TXM [14]
RF_B1_TRX_TXM [14]
RF_B3_TRX_TXM [14]
RF_B5_TRX_TXM [14]
RF_B7_TRX_TXM [14]
RF_B28B_TRX_TXM [14]
RF_B28A_TRX_TXM [14]
RF_DCS1800_PRX [14]
RF_GSM900_PRX [14]

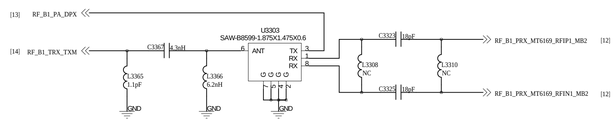
U3303
SAW-B8599-1.875X1.475X0.6
RF_B1_PA_DPX [13]
RF_B1_TRX_TXM [14]
C3365 4.3nH
L3365 1.1pF
L3366 6.2nH
C3324 18pF
L3308 NC
L3310 NC
RF_B1_PRX_MT6169_RFIP1_MB2 [12]
RF_B1_PRX_MT6169_RFIN1_MB2 [12]

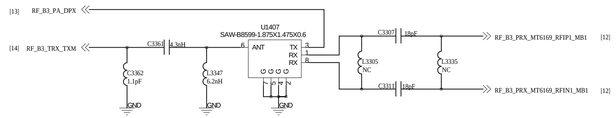
U1407
SAW-B8599-1.875X1.475X0.6
RF_B3_PA_DPX [13]
RF_B3_TRX_TXM [14]
C3363 4.3nH
C3362 1.1pF
L3347 6.2nH
C3307 18pF
L3305 NC
L3335 NC
C3311 18pF
RF_B3_PRX_MT6169_RFIP1_MB1 [12]
RF_B3_PRX_MT6169_RFIN1_MB1 [12]

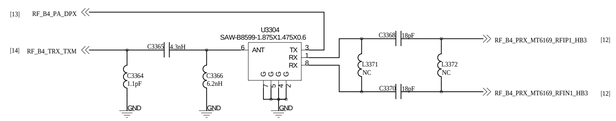
U3304
SAW-B8599-1.875X1.475X0.6
RF_B4_PA_DPX [13]
RF_B4_TRX_TXM [14]
C3362 4.3nH
C3364 1.1pF
L3366 6.2nH
C3368 18pF
L3371 NC
L3372 NC
C3375 18pF
RF_B4_PRX_MT6169_RFIP1_HB3 [12]
RF_B4_PRX_MT6169_RFIN1_HB3 [12]

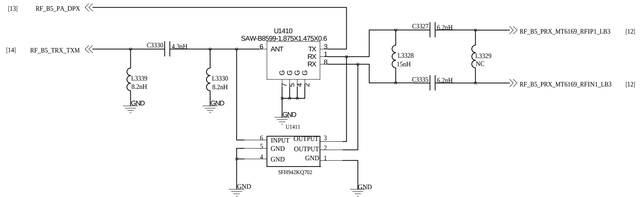
U1410
SAW-B8599-1.875X1.475X0.6
RF_B5_PA_DPX [13]
RF_B5_TRX_TXM [14]
C3330 4.3nH
L3339 8.2nH
L3330 8.2nH
C3327 6.2nH
L3328 15nH
L3329 NC
C3335 6.2nH
RF_B5_PRX_MT6169_RFIP1_LB3 [12]
RF_B5_PRX_MT6169_RFIN1_LB3 [12]
U1411
SFH9426QT02
INPUT
OUTPUT
GND

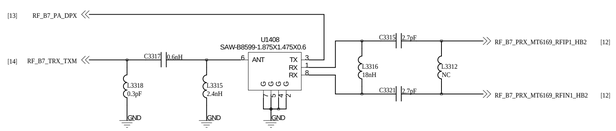
U1408
SAW-B8599-1.875X1.475X0.6
RF_B7_PA_DPX [13]
RF_B7_TRX_TXM [14]
C3313 6.6nH
L3318 0.3pF
L3315 2.4nH
C3315 0.7nF
L3316 18nH
L3312 NC
C3321 0.7nF
RF_B7_PRX_MT6169_RFIP1_HB2 [12]
RF_B7_PRX_MT6169_RFIN1_HB2 [12]

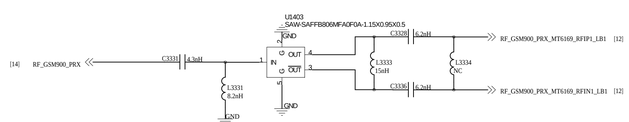
U1403
SAW-SAFFB806MFA0F0A-1.15X0.95X0.5
RF_GSM900_PRX [14]
C3331 4.3nH
L3331 8.2nH
C3335 6.2nH
L3333 15nH
L3334 NC
C3336 6.2nH
RF_GSM900_PRX_MT6169_RFIP1_LB1 [12]
RF_GSM900_PRX_MT6169_RFIN1_LB1 [12]

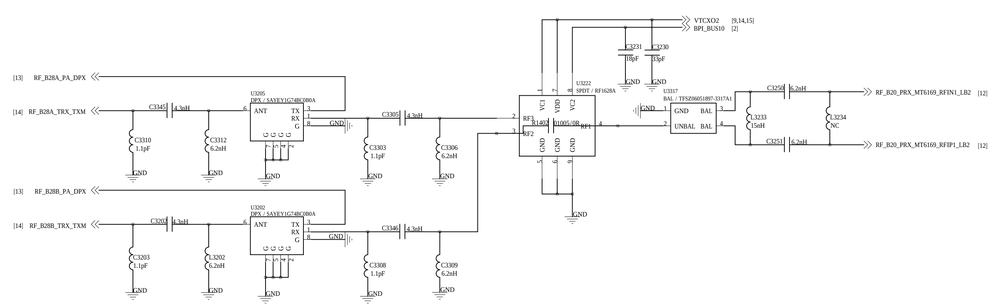
VTCXO2 [9,14,15]
BPI_BUS10 [2]
U3205
DPX / SAYEYG74BC080A
RF_B28A_PA_DPX [13]
RF_B28A_TRX_TXM [14]
C3345 4.3nH
C3310 1.1pF
C3312 6.2nH
C3305 4.3nH
C3303 1.1pF
C3306 6.2nH
U3202
DPX / SAYEYG74BC080A
RF_B28B_PA_DPX [13]
RF_B28B_TRX_TXM [14]
C3205 4.3nH
C3203 1.1pF
C3202 6.2nH
C3346 4.3nH
C3308 1.1pF
C3309 6.2nH
U3222
SP3T / RF1628A
U1403
U3317
BAL / TPS206051087-3317A1
C3231 18pF
C3230 33pF
C3250 6.2nH
L3233 15nH
L3234 NC
C3251 6.2nH
RF_B20_PRX_MT6169_RFIN1_LB2 [12]
RF_B20_PRX_MT6169_RFIP1_LB2 [12]

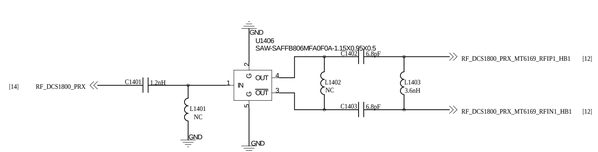
U1406
SAW-SAFFB806MFA0F0A-1.15X0.95X0.5
RF_DCS1800_PRX [14]
C1401 1.2nH
L1401 NC
C1402 6.8pF
L1402 NC
L1403 5.6nH
C1403 6.8pF
RF_DCS1800_PRX_MT6169_RFIP1_HB1 [12]
RF_DCS1800_PRX_MT6169_RFIN1_HB1 [12]

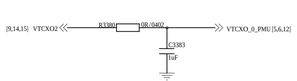
[9,14,15] VTCXO2
R3380 0R /0402
VTCXO_0_PMU [5,6,12]
C3383 1nF

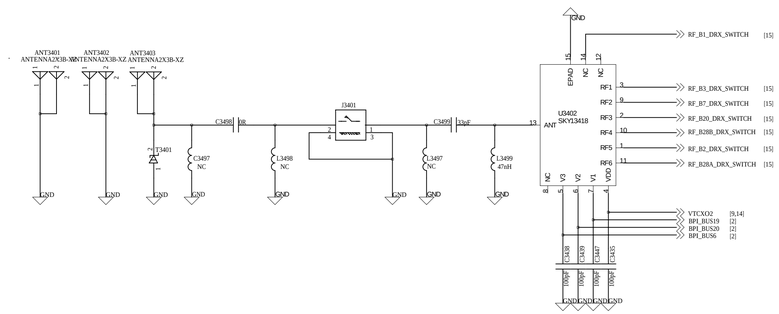
ANT3401
ANTENNA2X3B-XZ
ANT3402
ANTENNA2X3B-XZ
ANT3403
ANTENNA2X3B-XZ
T3401
C3497
NC
L3498
NC
J3401
C3498
18
C3499
33nF
L3497
NC
L3499
47nH
GND
U3402
SKY13418
ANT
EPAD
NC
RF1
RF2
RF3
RF4
RF5
RF6
VDD
V1
V2
V3
RF_B1_DRX_SWITCH [15]
RF_B3_DRX_SWITCH [15]
RF_B7_DRX_SWITCH [15]
RF_B20_DRX_SWITCH [15]
RF_B28B_DRX_SWITCH [15]
RF_B2_DRX_SWITCH [15]
RF_B28A_DRX_SWITCH [15]
VTCXO2 [9,14]
BPI_BUS19 [2]
BPI_BUS20 [2]
BPI_BUS6 [2]
C3430
C3439
C3447
C3435
100pF

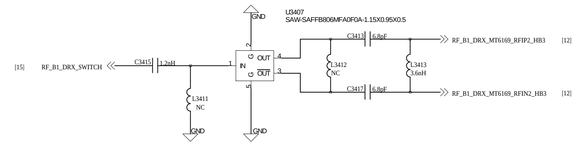
U3407
SAW-SAFFB806MFA0F0A-1.15X0.95X0.5
[15] RF_B1_DRX_SWITCH
C3415 1.2nH
L3411
NC
IN
OUT
C3413 6.8pF
L3412
NC
L3413
1.6nH
C3417 6.8pF
RF_B1_DRX_MT6169_RFIP2_HB3 [12]
RF_B1_DRX_MT6169_RFIN2_HB3 [12]

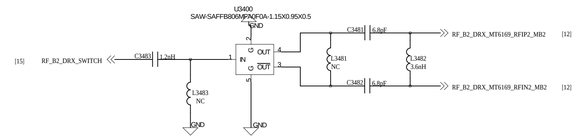
U3400
SAW-SAFFB806MPA0F0A-1.15X0.95X0.5
[15] RF_B2_DRX_SWITCH
C3483 1.2nH
L3483
NC
IN
OUT
C3481 6.8pF
L3481
NC
L3482
1.6nH
C3482 6.8pF
RF_B2_DRX_MT6169_RFIP2_MB2 [12]
RF_B2_DRX_MT6169_RFIN2_MB2 [12]

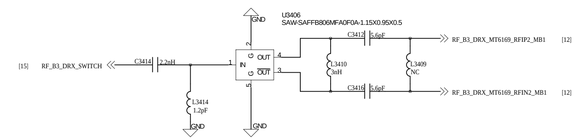
U3406
SAW-SAFFB806MFA0F0A-1.15X0.95X0.5
[15] RF_B3_DRX_SWITCH
C3414 2.2nH
L3414
1.2pF
IN
OUT
C3412 5.6pF
L3410
2nH
L3409
NC
C3416 5.6pF
RF_B3_DRX_MT6169_RFIP2_MB1 [12]
RF_B3_DRX_MT6169_RFIN2_MB1 [12]

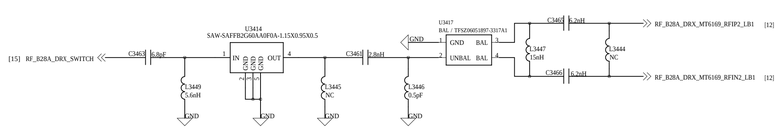
U3414
SAW-SAFFB2G660AA0F0A-1.15X0.95X0.5
[15] RF_B28A_DRX_SWITCH
C3463 6.8pF
L3449
1.6nH
IN
GND
GND
GND
OUT
C3461 0.8nH
L3445
NC
L3446
0.5pF
U3417
BAL / TFSZ00051897-3317A1
GND
UNBAL
BAL
C3465 6.2nH
L3447
15nH
L3444
NC
C3466 6.2nH
RF_B28A_DRX_MT6169_RFIP2_LB1 [12]
RF_B28A_DRX_MT6169_RFIN2_LB1 [12]

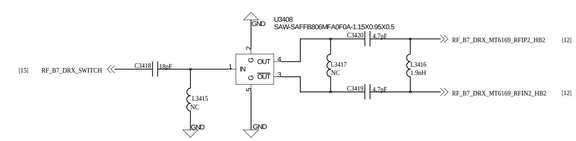
U3408
SAW-SAFFB806MFA0F0A-1.15X0.95X0.5
[15] RF_B7_DRX_SWITCH
C3418 18pF
L3415
NC
IN
OUT
C3420 4.7pF
L3417
NC
L3416
1.9nH
C3419 4.7pF
RF_B7_DRX_MT6169_RFIP2_HB2 [12]
RF_B7_DRX_MT6169_RFIN2_HB2 [12]

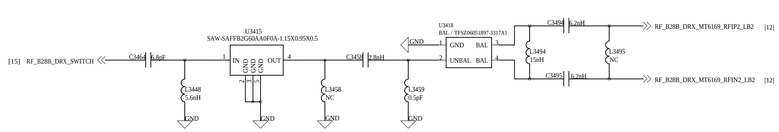
U3415
SAW-SAFFB2G660AA0F0A-1.15X0.95X0.5
[15] RF_B28B_DRX_SWITCH
C3464 6.8pF
L3448
1.6nH
IN
GND
GND
GND
OUT
C3462 0.8nH
L3458
NC
L3459
0.5pF
U3418
BAL / TFSZ00051897-3317A1
GND
UNBAL
BAL
C3494 6.2nH
L3494
15nH
L3495
NC
C3495 6.2nH
RF_B28B_DRX_MT6169_RFIP2_LB2 [12]
RF_B28B_DRX_MT6169_RFIN2_LB2 [12]

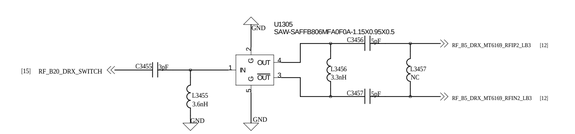
U1305
SAW-SAFFB806MFA0F0A-1.15X0.95X0.5
[15] RF_B20_DRX_SWITCH
C3455 3pF
L3455
1.6nH
IN
OUT
C3456 5pF
L3456
1.3nH
L3457
NC
C3457 5pF
RF_B5_DRX_MT6169_RFIP2_LB3 [12]
RF_B5_DRX_MT6169_RFIN2_LB3 [12]

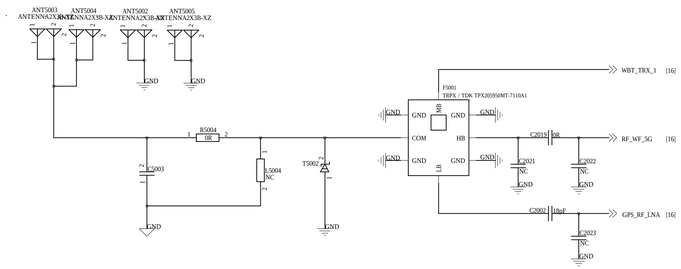
ANT5003
ANTENNA2X3B-XZ
ANT5004
ANTENNA2X3B-XZ
ANT5002
ANTENNA2X3B-XZ
ANT5005
ANTENNA2X3B-XZ
GND
WBT_TRX_1 [16]
F5001
TBPX / TDK TPX205950MT-7110A1
GND
COM
MB
HB
LB
RF_WF_5G [16]
GPS_RF_LNA [16]
R5004
0R
C5003
L5004
NC
T5002
C2019
0R
C2021
NC
C2022
NC
C2002
10nF
C2023
NC

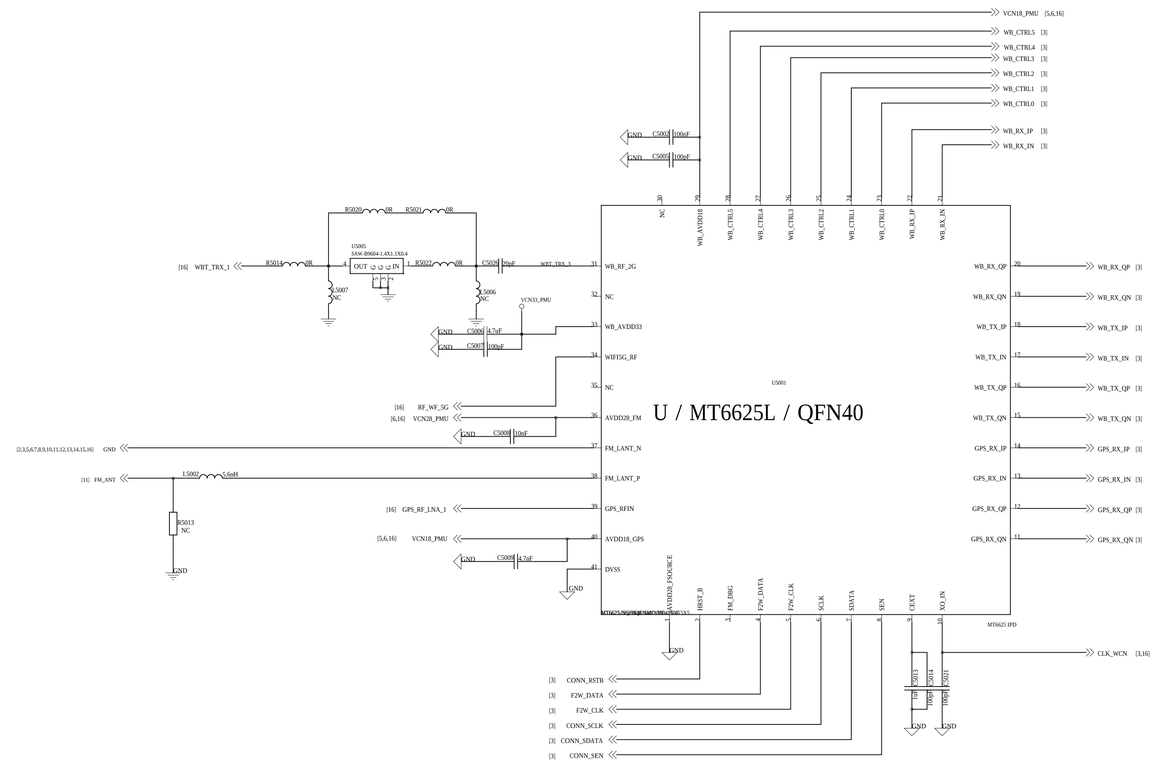
U / MT6625L / QFN40
U5001
VCN18_PMU [5,6,16]
WB_CTRL5 [3]
WB_CTRL4 [3]
WB_CTRL3 [3]
WB_CTRL2 [3]
WB_CTRL1 [3]
WB_CTRL0 [3]
WB_RX_IP [3]
WB_RX_IN [3]
C5004 100nF
C5005 100nF
R5020 0R
R5021 0R
U5005
SAW-89604-1.4X1.1X0.4
R5014 0R
R5022 0R
C5028 10nF
L5007 NC
L5006 NC
VCN33_PMU
C5006 4.7uF
C5007 100nF
[16] WBT_TRX_1
[16] RF_WF_5G
[6,16] VCN28_PMU
C5008 10nF
[2,3,5,6,7,8,9,10,11,12,13,14,15,16] GND
[11] FM_ANT
L5002 5.6nH
R5013 NC
[16] GPS_RF_LNA_1
[5,6,16] VCN18_PMU
C5009 4.7uF
NC
WB_AVDD18
WB_CTRL5
WB_CTRL4
WB_CTRL3
WB_CTRL2
WB_CTRL1
WB_CTRL0
WB_RX_IP
WB_RX_IN
WB_RF_2G
NC
WB_AVDD33
WIFI5G_RF
NC
AVDD28_FM
FM_LANT_N
FM_LANT_P
GPS_RFIN
AVDD18_GPS
DVSS
WB_RX_QP
WB_RX_QN
WB_TX_IP
WB_TX_IN
WB_TX_QP
WB_TX_QN
GPS_RX_IP
GPS_RX_IN
GPS_RX_QP
GPS_RX_QN
HRST_B
PM_DBG
F2W_DATA
F2W_CLK
SCLK
SDATA
SEN
CEXT
XO_IN
MT6625 IPD
CLK_WCN [3,16]
C5023 1uF
C5024 100pF
C5025 100pF
[3] CONN_RSTB
[3] F2W_DATA
[3] F2W_CLK
[3] CONN_SCLK
[3] CONN_SDATA
[3] CONN_SEN

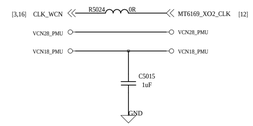
[3,16] CLK_WCN
R5024 0R
MT6169_XO2_CLK [12]
VCN28_PMU
VCN28_PMU
VCN18_PMU
VCN18_PMU
C5015
1uF
GND

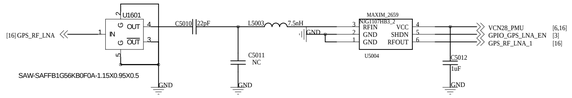
[16] GPS_RF_LNA
U5601
IN
OUT
OUT
SAW-SAFFB1G56KB0F0A-1.15X0.95X0.5
C5010 12nF
L5003 7.5nH
C5011
NC
GND
MAXIM_2659
WLCSP9B3-2
RFIN
GND
GND
VCC
SHDN
RFOUT
U5604
VCN28_PMU [6,16]
GPIO_GPS_LNA_EN [3]
GPS_RF_LNA_1 [16]
C5012
1uF