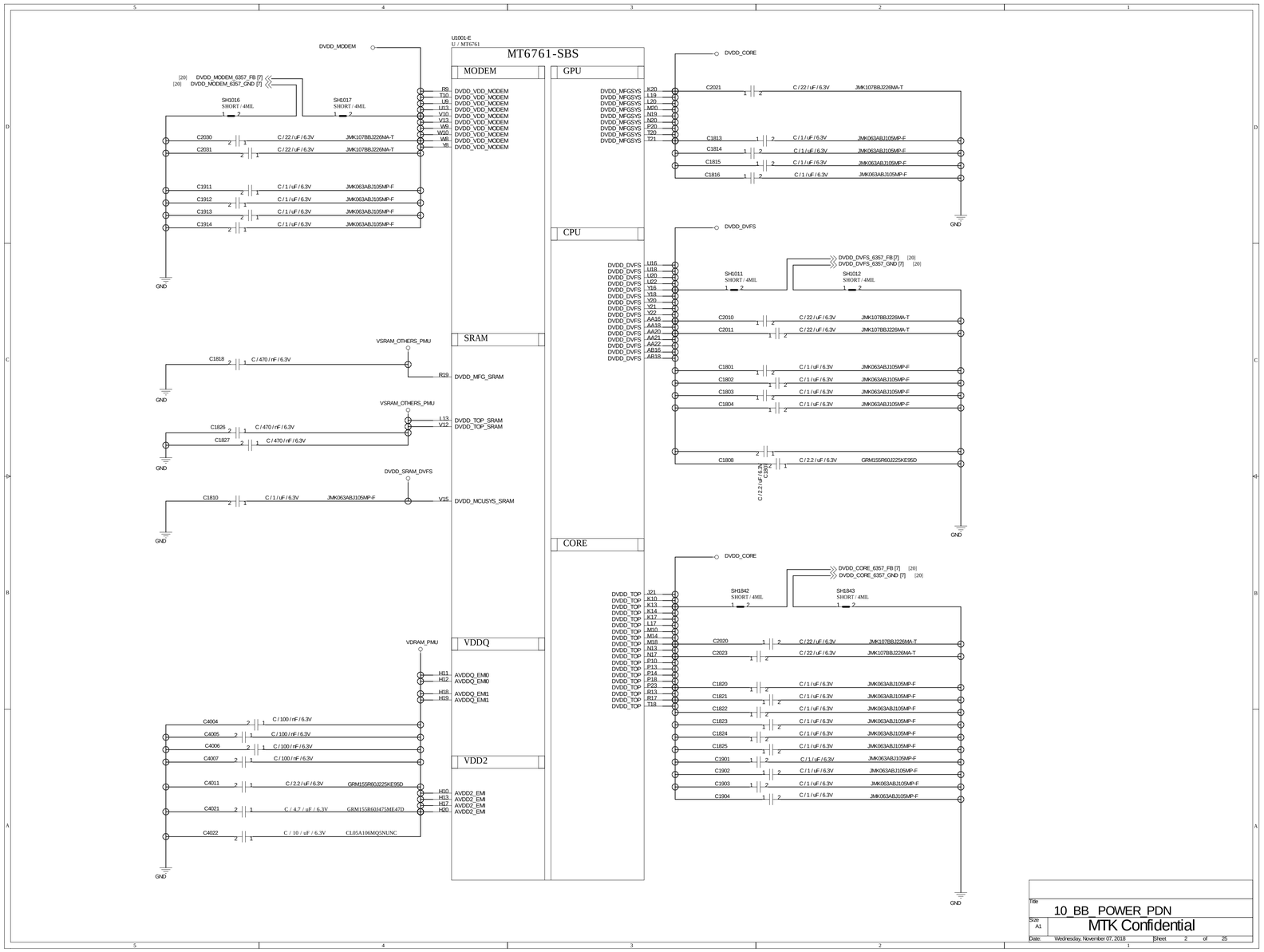

Title
10_BB_POWER_PDN

Size A1

MTK Confidential

Date: Wednesday, November 07, 2018 Sheet 2 of 25

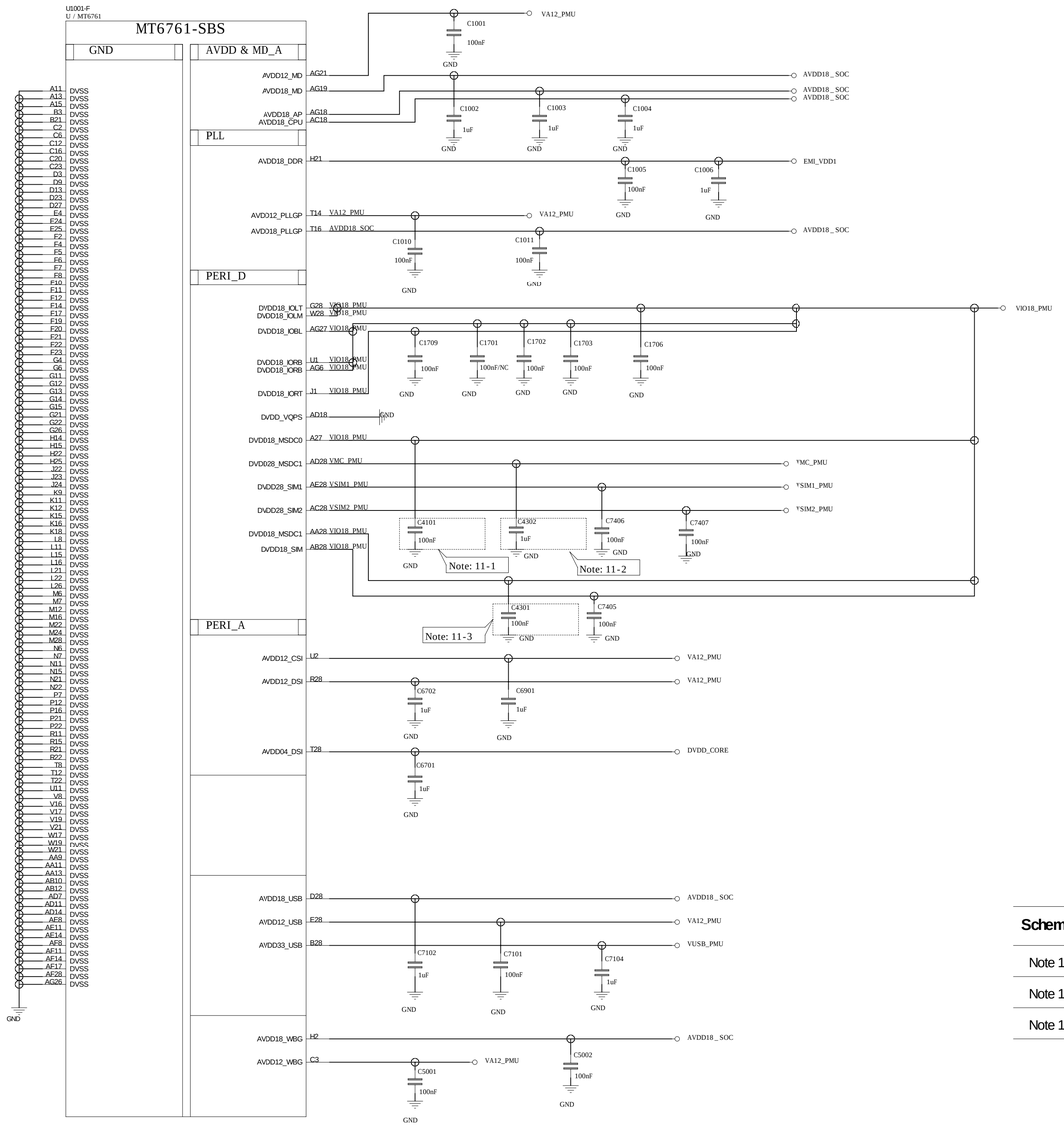

Schematic design notice of "11_BB_POWER_IO" page.

Note 11-1: C4101 closed DVDD18_MSDC0 150mil

Note 11-2: C4302 closed DVDD28_MSDC1 150mil

Note 11-3: C4301 closed DVDD18_MSDC1 150mil

Title	11_BB_POWER_PDN
Size A1	MTK Confidential
Date: Wednesday, November 07, 2018	Sheet 3 of 25

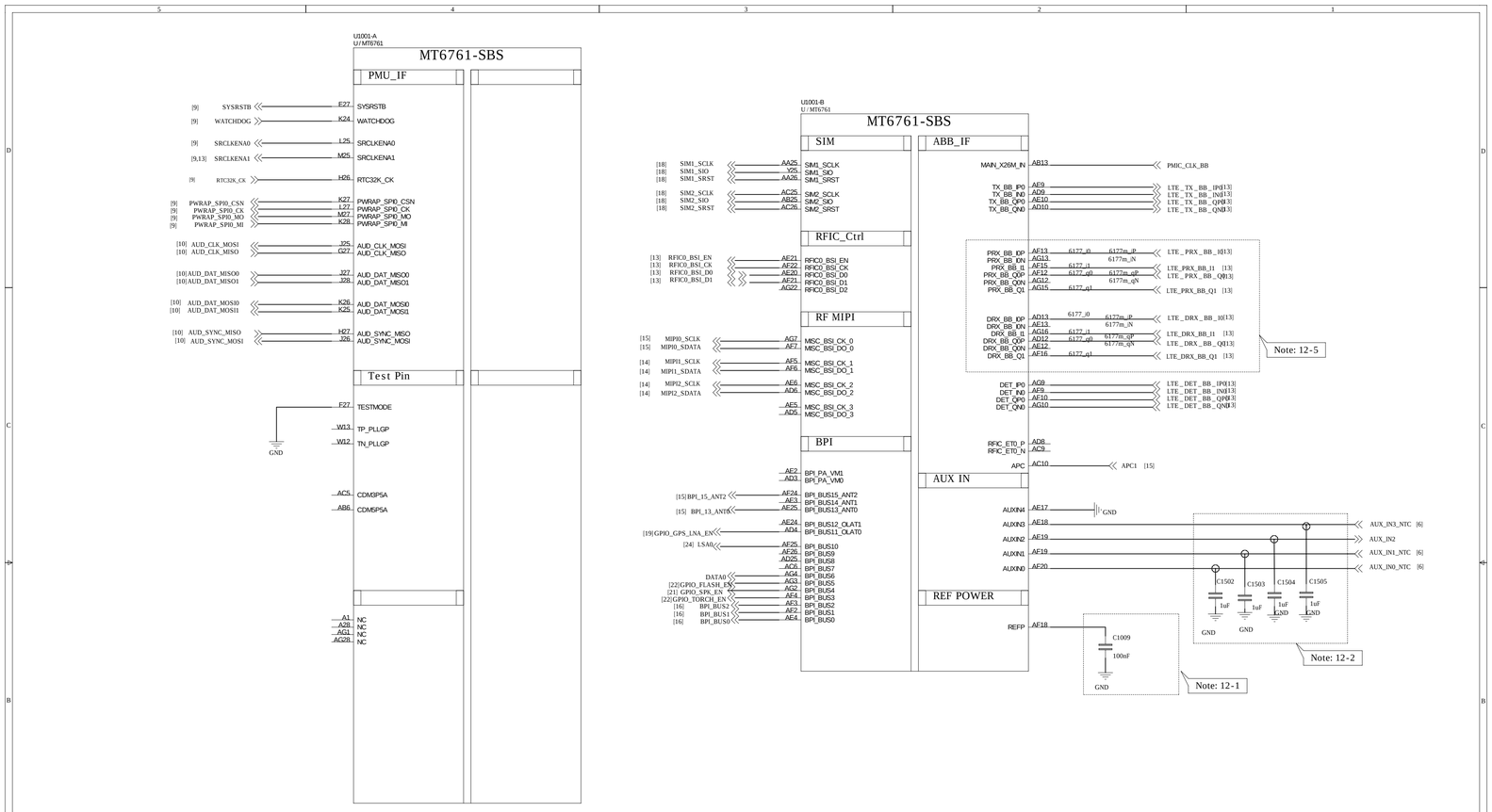

Schematic design notice of "12_BB_1" page.

Note 12-1: The de-coupling cap. for REFP (AF18 ball) have to be placed as close to BB as possible.

Note 12-2: To shunt a 1uF capacitor in the AUXIN ADC input to prevent noise coupling. It should be placed as close to BB as possible. Connect the unused AUX ADC input to GND.

Note 12-5: Please set unused IQ pins in NC

Title	12_BB_1
Size A1	MTK Confidential
Date: Friday, November 09, 2018	Sheet 4 of 25

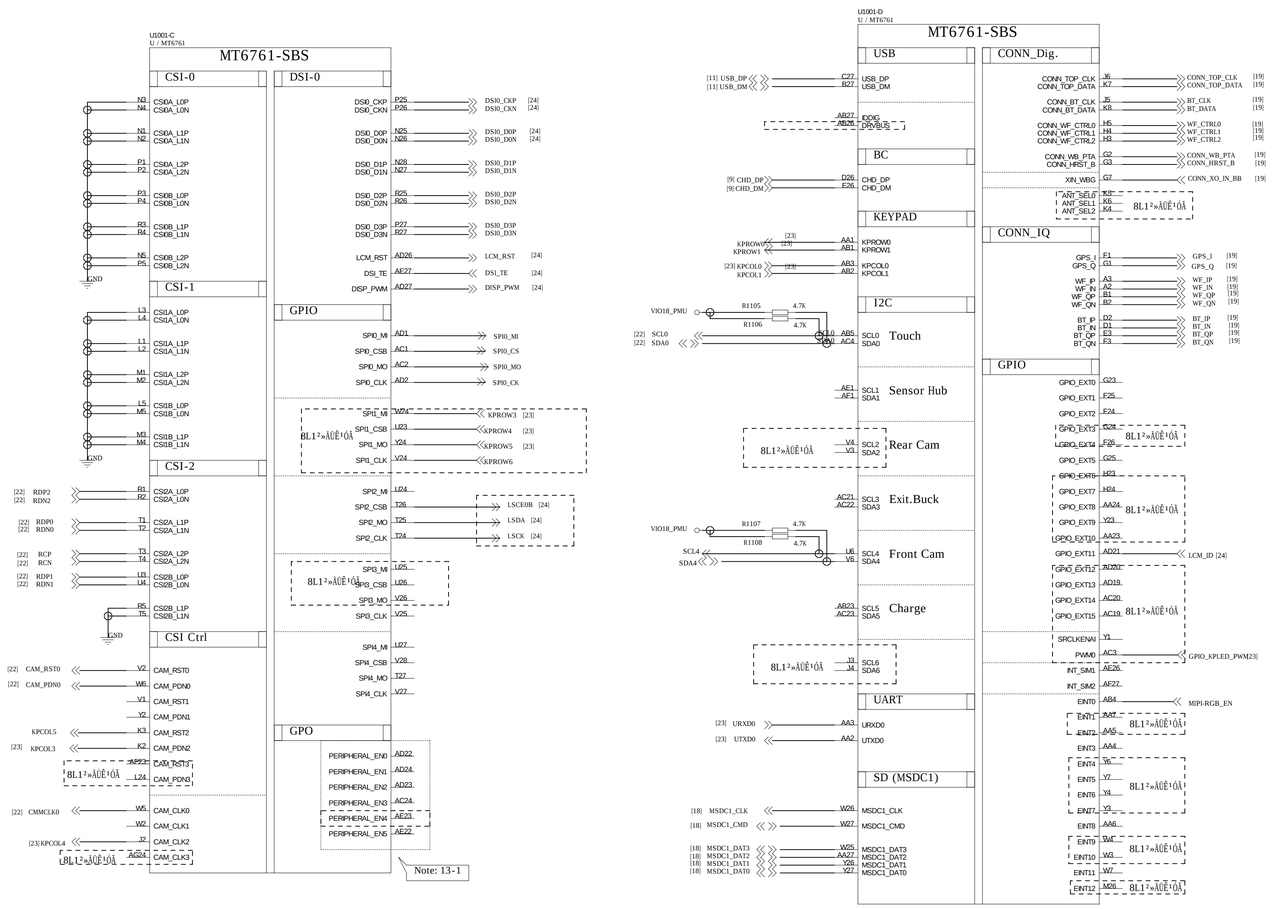

Schematic design notice of "13_BB_2" page.

Note 13-1: The enable pin of acoustic or optoelectronic devices (e.g. SPK AMP/Backlight/Charger OCP/OVP) suggest to use Peripheral_EN[0:5]
If use other GPIOs as enable pin, suggest to reserve 0201 NC to GND

Title	4_BB_2
Size A1	MTK Confidential
Date: Friday, December 08, 2017	Sheet 5 of 25

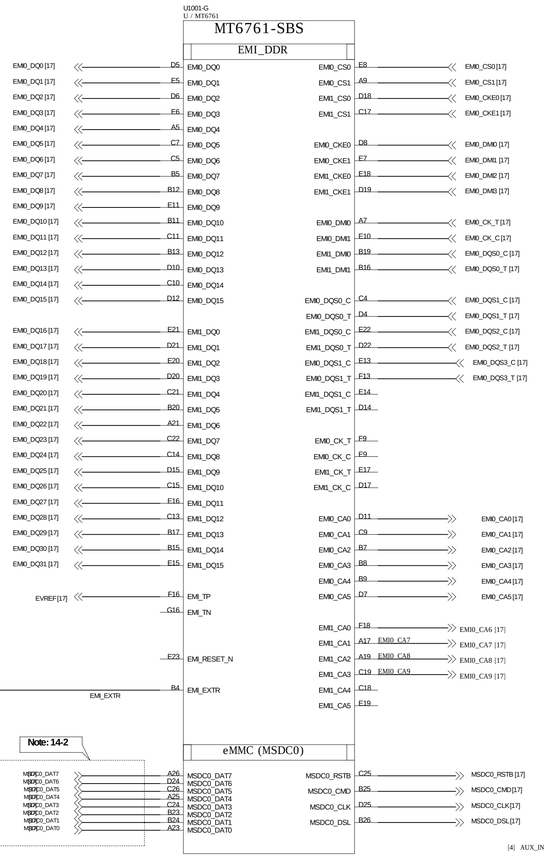

Thermistor to sense Board Edges

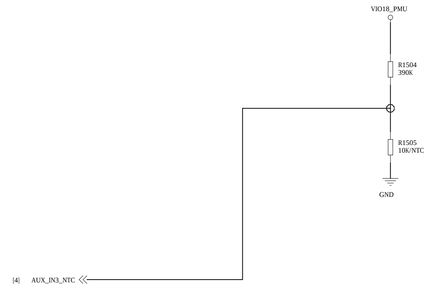

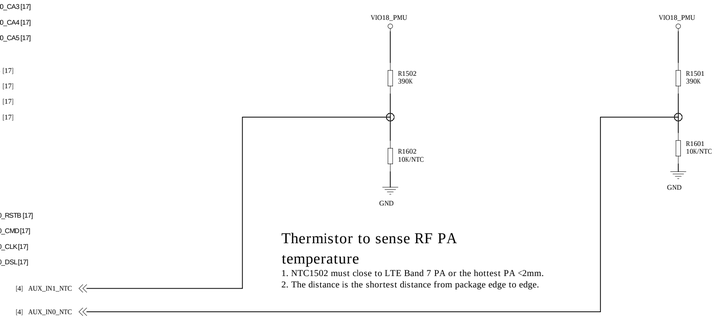

Thermistor to sense RF PA temperature

1. NTC1502 must close to LTE Band 7 PA or the hottest PA <2mm.
2. The distance is the shortest distance from package edge to edge.

Thermistor to sense AP temperature

1. NTC1501must keep a distance about 6~8 mm away from AP and far from other heat sources 10 mm at least.
2. The distance is the shortest distance from package edge to edge.

Schematic design notice of "14_BB_3" page.

Note 14-1: R4001 please select 60.4 ohm (1%) resistor

Note 14-2: Please check eMCP LP3 and eMCP LP4X/LP4 pin mux

Title	14_BB_3
Size A1	MTK Confidential
Date: Friday, November 09, 2018	Sheet 6 of 25

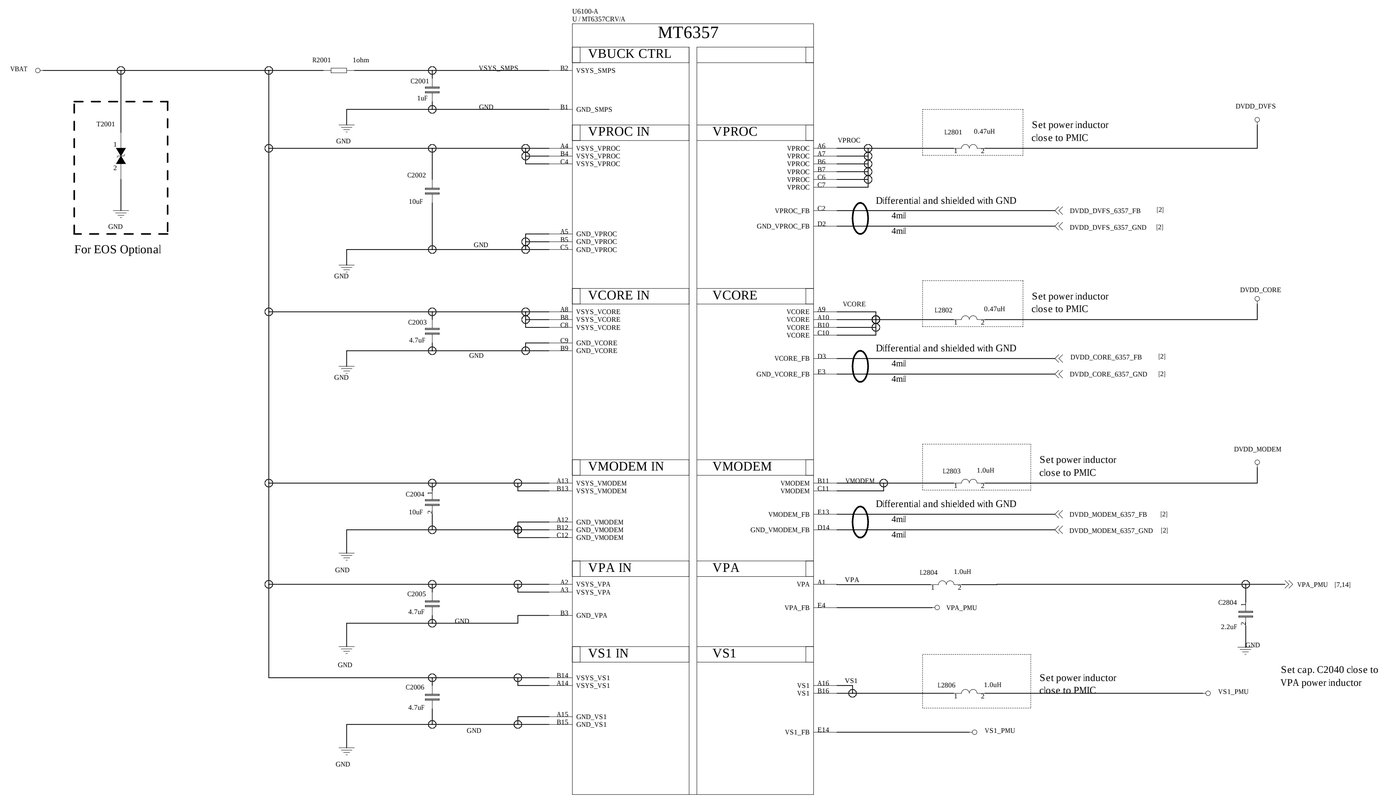

Schematic design notice of "20_POWER_MT6357_Buck"

Note 20-1: C2040, please choose 0603 size

Title	6 _ POWER _ MT6357-Buck
Size A1	MTK Confidential
Date: Friday, December 08, 2017	Sheet 7 of 25

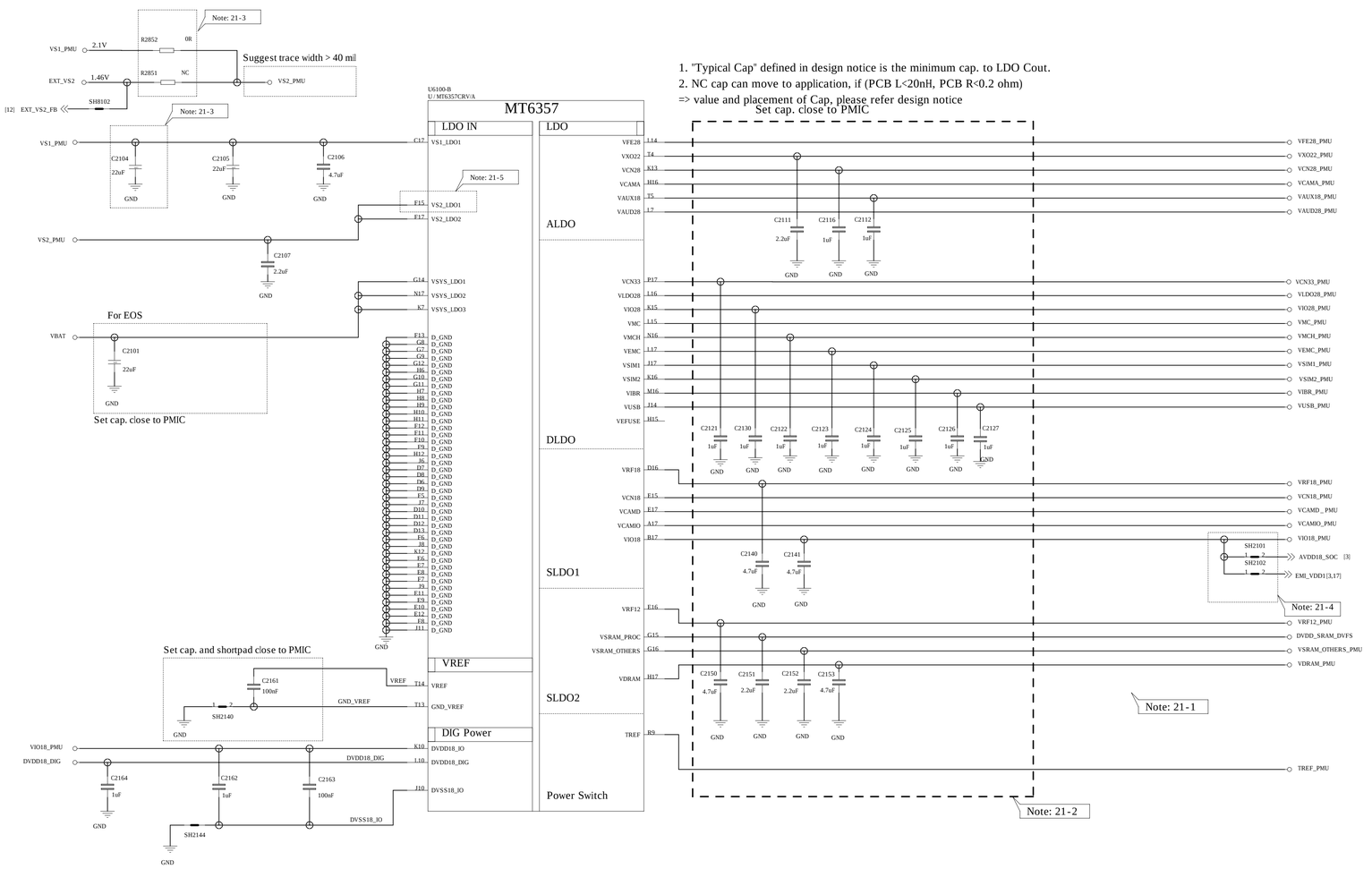

1. "Typical Cap" defined in design notice is the minimum cap. to LDO Cout.
2. NC cap can move to application, if (PCB L<20nH, PCB R<0.2 ohm)
=> value and placement of Cap, please refer design notice

Schematic design notice of "21_POWER_MT6357_LDO"

Note 21-1: If these power trace can meet LDO layout constraint, these CAP can be NC or removed. Please refer to MT6357 design notice.

Note 21-2: Output cap range please follow MT6357CRV LDO design notice

Note 21-3: Ext Buck BOM option

	Ext. buck option	
	w/ EXT VS2 Buck	w/o EXT VS2 Buck
C2104	10uF	22uF
R2851	0-ohm , 0603	NC
R2852	NC	0-ohm , 0603

Note 21-4: Please set SH2101 and SH2102 close to C2141, making star connection among VIO18_PMU, AVDD18_SOC, and EMI_VDD1 near to LDO cap. C2141

Please also refer to MT6357 design notice for further detail design information

Note 21-5: Please connect VS2_LDO1(F15) to VS1_PMU if voltage applied to VCAMD(E17) >= 1.3 V

Title: 7 _ POWER _ MT6357-LDO

Size: A1

MTK Confidential

Date: Friday, December 08, 2017 Sheet 8 of 25

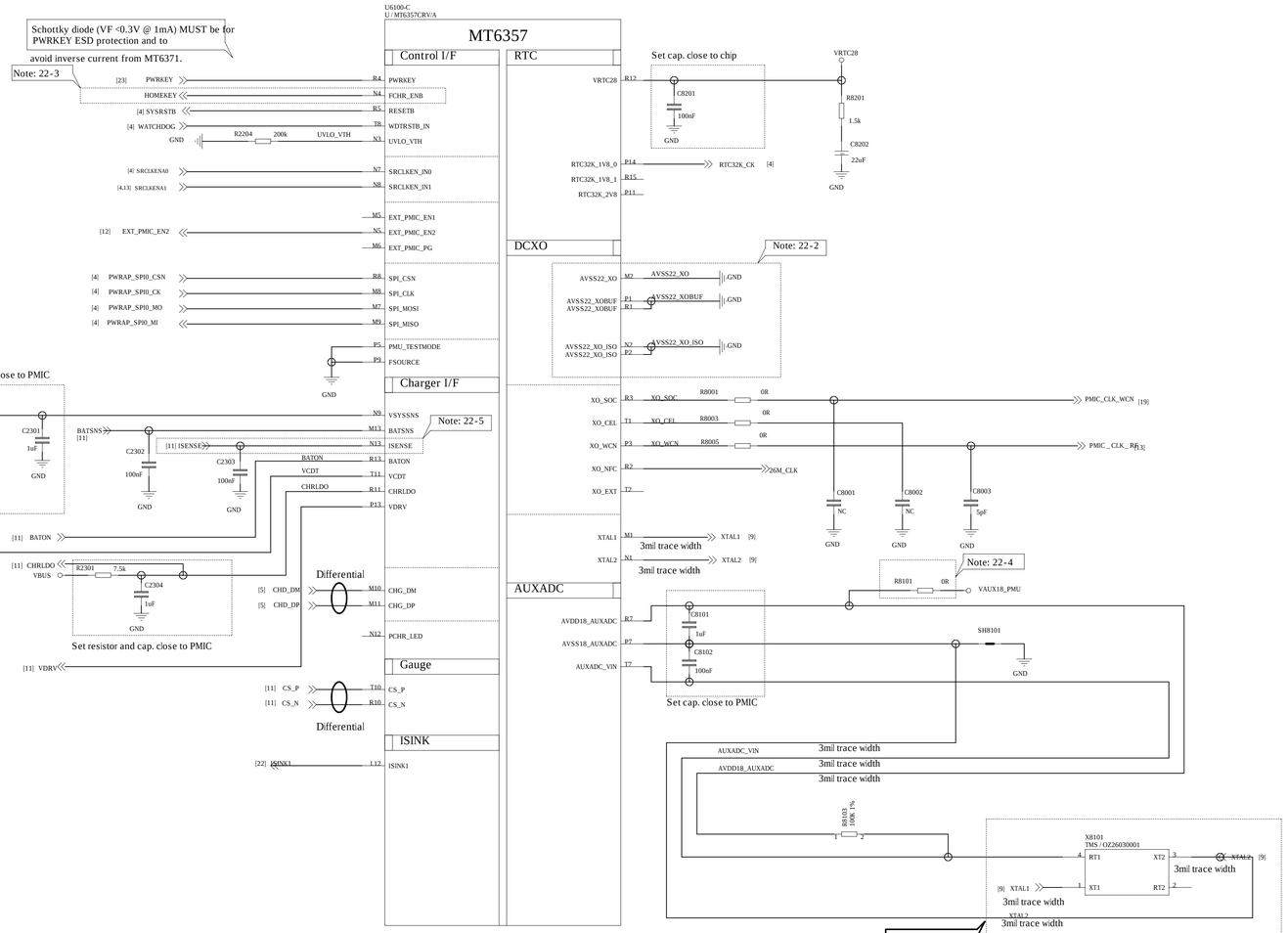

Route AVDD18_AUXADC, AUXADC_VIN, and AVSS18_AUXADC with 3mils width traces and well GND shielding

Schematic design notice of "22_POWER_MT6357-IF"	
Note 22-1:	Please implement 2520 & 2016 Size TMS PCB co-layout.
Note 22-2:	Please refer to MT6765_MT6357 Co-Clock Design Notice for co-layout guide 1. Please Connect P1 and R1 ball first and then to GND 2. Please Connect P2 and N2 ball first and then to GND 3. Please connect DCXO GND to main GND by independent L1-2 GND via.; DO NOT connect it through L1 GND
Note 22-3:	Let floating if disable HOMEKEY function
Note 22-4:	Please follow MT6765_MT6357 Co-Clock Design Notice for Layout guide of VAUX18, then R8101 can use 0 ohm to replace BEAD.
Note 22-5:	Please connect to battery connector

Title: 8_POWER_MT6357-IF

Size: A1

MTK Confidential

Date: Friday, December 08, 2017 Sheet 9 of 25

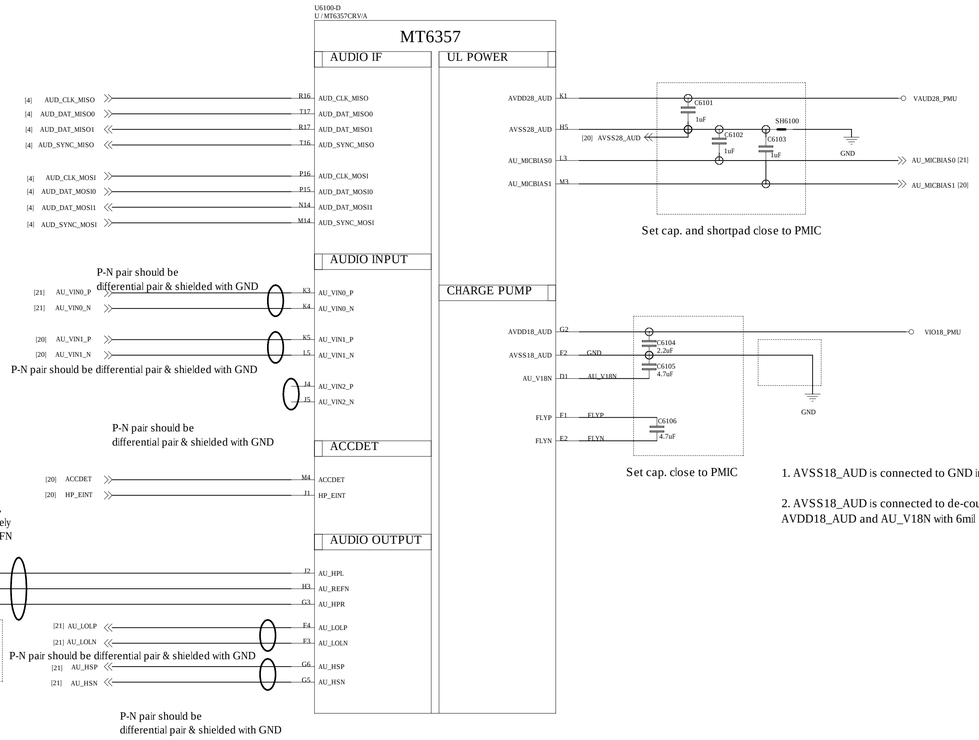

1. AVSS18_AUD is connected to GND in very short trace

2. AVSS18_AUD is connected to de-couple cap of AVDD18_AUD and AU_V18N with 6mil trace respectively

- AU_HPL and AU_HPR should be routed as single end signal, and be guarded by GND, up and down, left and right respectively
- The suggested layout pattern of AU_HPL/ AU_HPR/ AU_REFN is " GND AU_HPL AU_REFN AU_HPR GND"

Title	9 _ POWER _ MT6357-Audio
Size A1	MTK Confidential
Date: Friday, December 08, 2017	Sheet 10 of 25

Charger

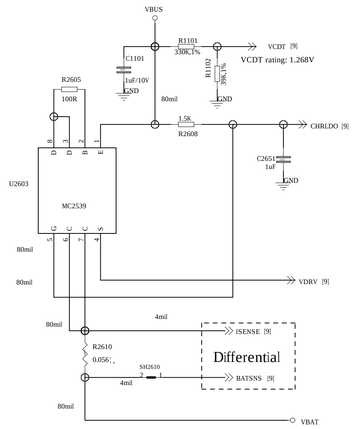

Close To Bat Connector

Care about thermal

BATTERY CONNECTOR

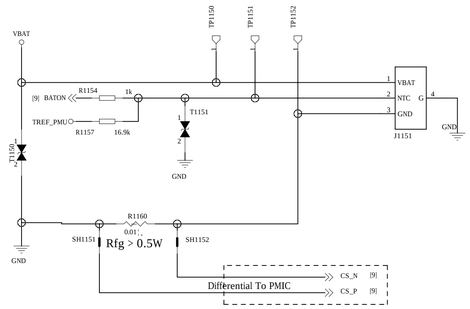

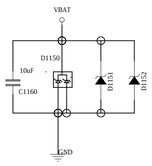

USB

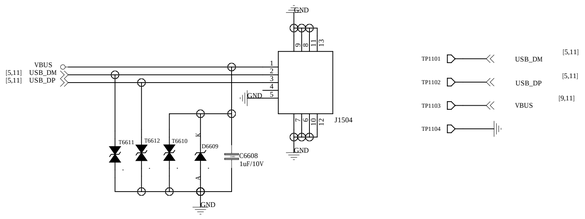

Pedestal

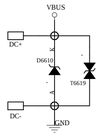

Title	11 _ POWER _ SubPMIC-Charger
Size A1	MTK Confidential
Date: Friday, December 08, 2017	Sheet 11 of 25

LDO for VA12

1.2V LDO

Note: 28-1

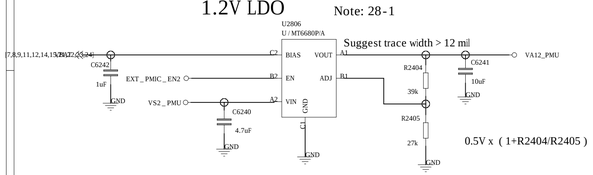

Ext. Bulk for VS2

Note: 28-2

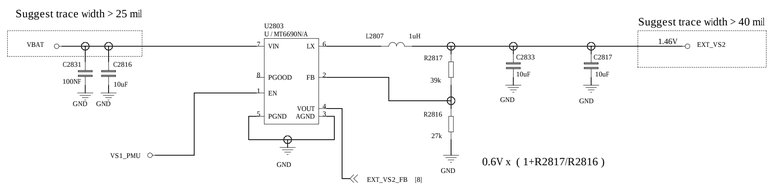

LDO for VCN33

Note: 28-3

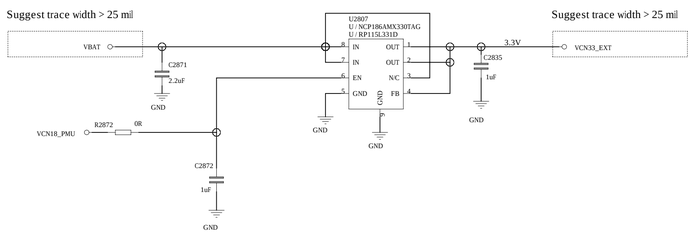

Schematic design notice of "28_POWER_ThirdParty-Power"

Note 28-1:	VA12 Layout placement please close to AP
Note 28-2:	VS2 Buck Layout placement please close to PMIC MT6357
Note 28-3:	VCN33 LDO Layout placement please close to MT6631
Note 28-4:	1.MT6691OOP/A Buck Layout Placement please close to LP4X/LP4 2.MT6691ZXP/A Buck Layout Placement please close to LP4X 3.If DRAM Application is LPDDR4 , MT6691ZXP/A NC
Note 28-5:	U2810 LDO Layout Placement Please close to LPDDR4X/LPDDR4 VDD1 power ball
Note 28-6:	For EMI_VDD2_FB and EMI_VDDQ_FB, please follow MMD rule

Title: 13 _ POWER _ ThirdParty _ Powers

Size: A1

MTK Confidential

Date: Friday, December 08, 2017 Sheet 12 of 25

PRX/DRX1~8:LMB:600M~2.025G
PRX/DRX9~12:MHB:1.805M~2.69G

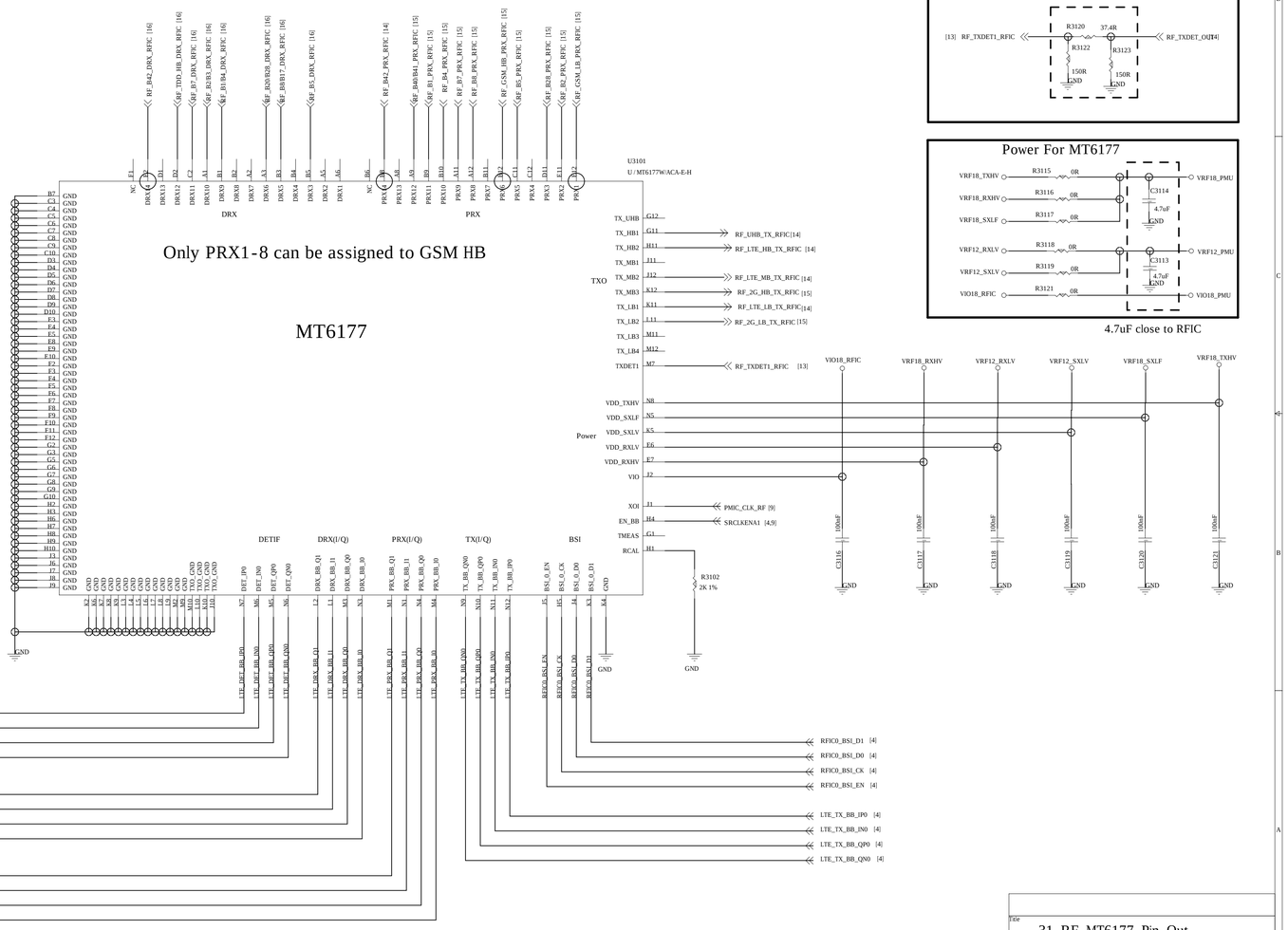

Title	31_RF_MT6177_Pin_Out
Size A1	MTK Confidential
Date: Friday, November 09, 2018	Sheet 13 of 25

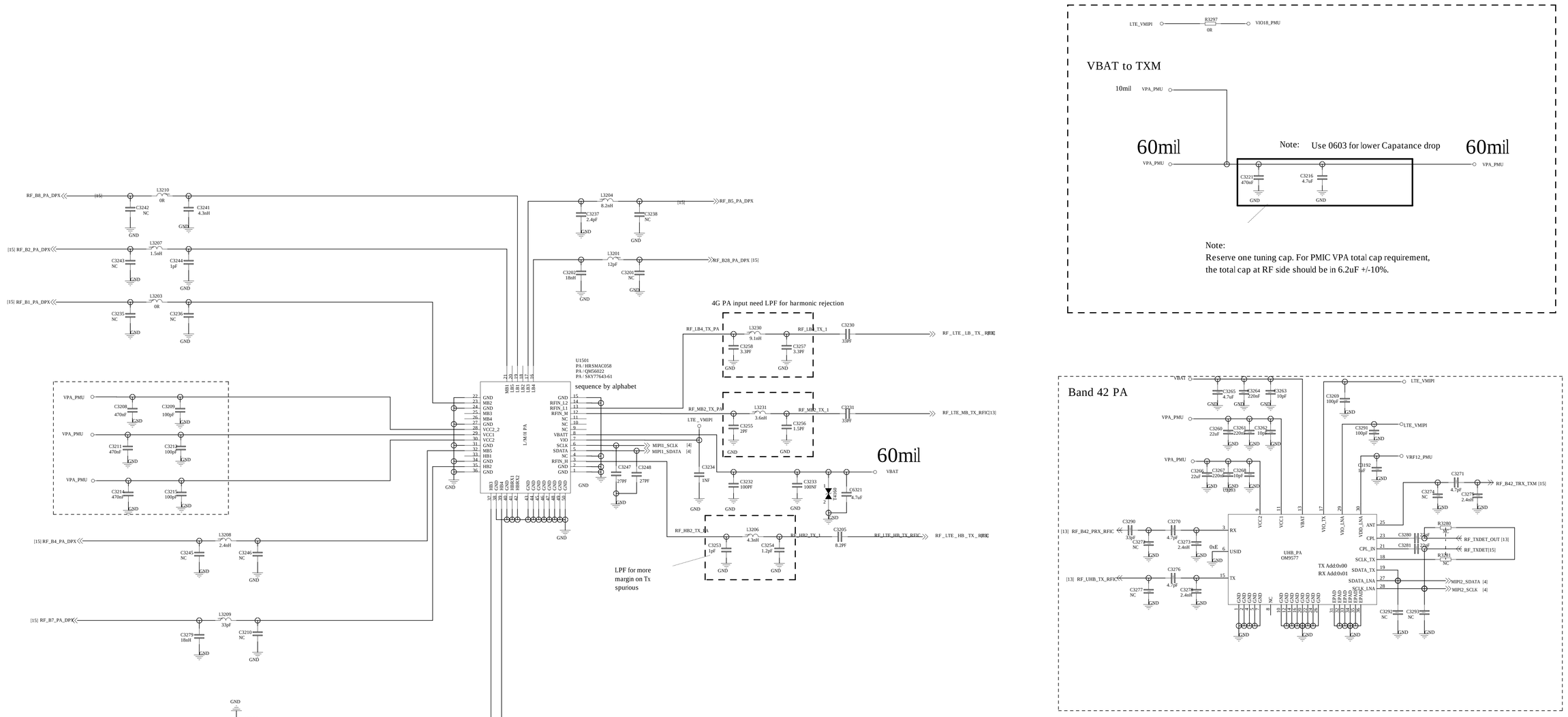

Title	15 _RF _ MT6177M _ RF _ TX
Size A1	MTK Confidential
Date: Monday, August 14, 2017	Sheet 14 of 25

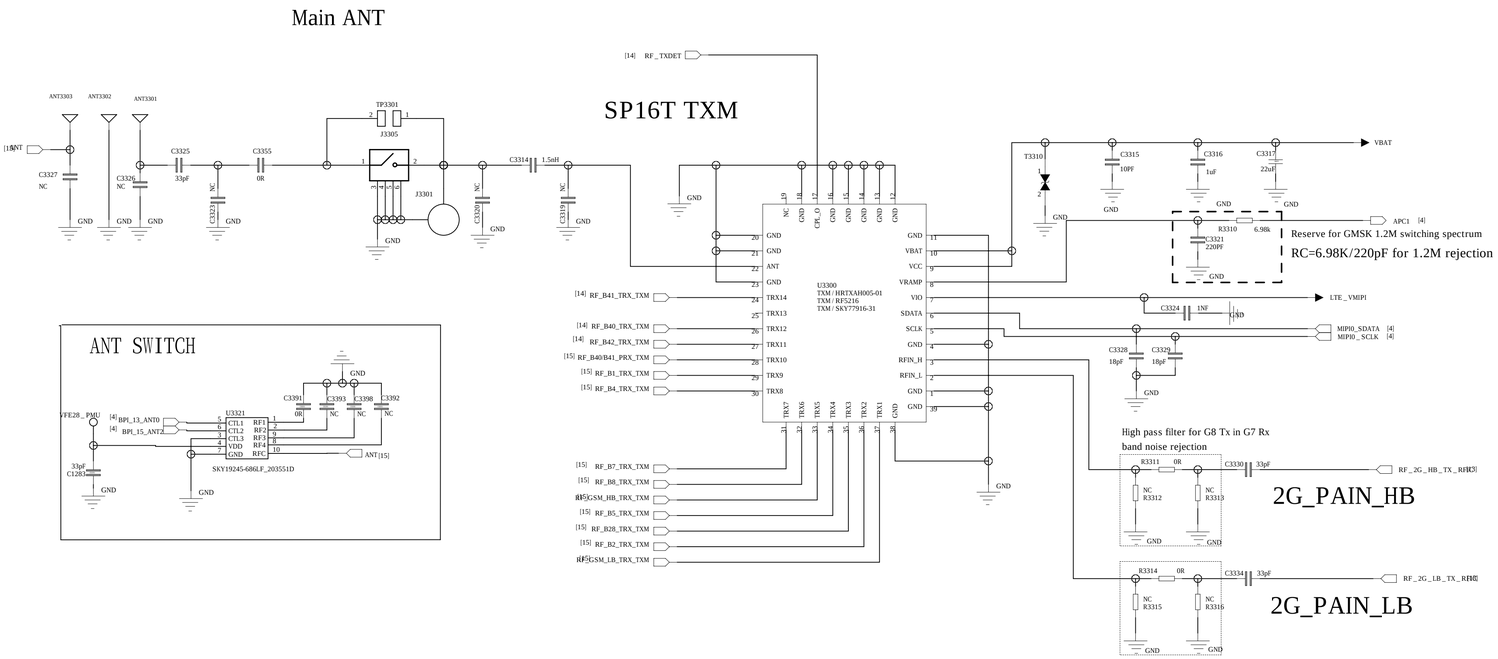
Main ANT
SP16T TXM
ANT SWITCH
U3300
TXM / HRTXAH005-01
TXM / RF5216
TXM / SKY77916-31
SKY19245-686LF_203551D
Reserve for GMSK 1.2M switching spectrum
RC=6.98K/220pF for 1.2M rejection
High pass filter for G8 Tx in G7 Rx
band noise rejection
2G_PAIN_HB
2G_PAIN_LB

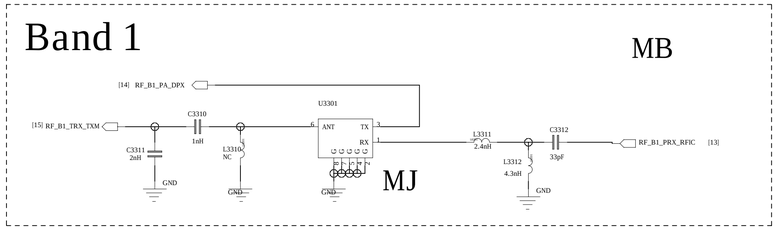
Band 1
MB
MJ

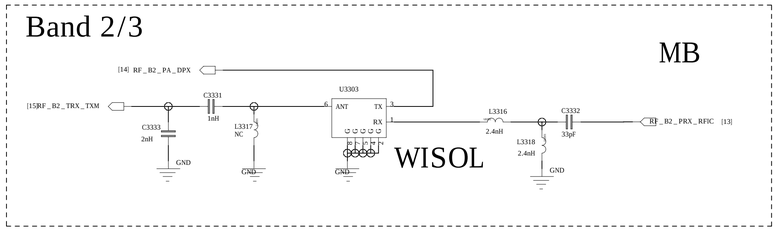
Band 2/3
MB
WISOL

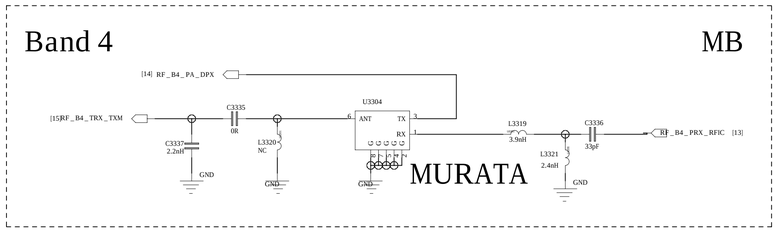
Band 4
MB
MURATA

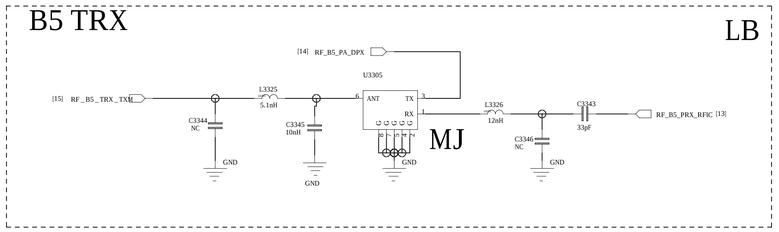
B5 TRX
LB
MJ

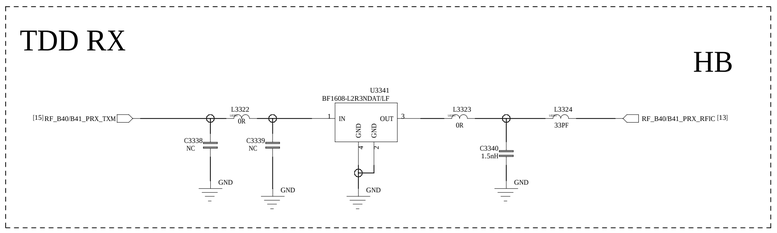
TDD RX
HB

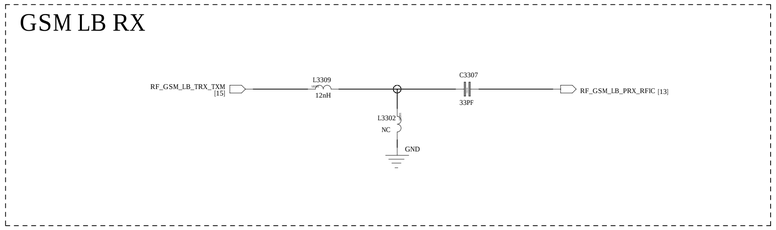
GSM LB RX

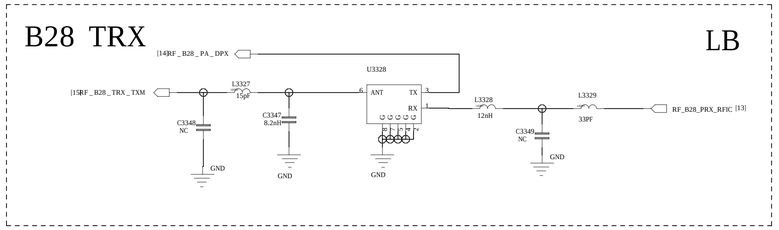
B28 TRX
LB

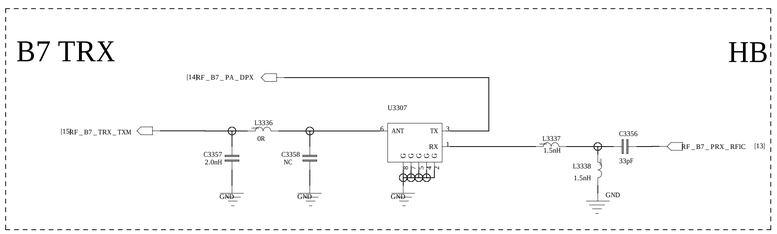
B7 TRX
HB

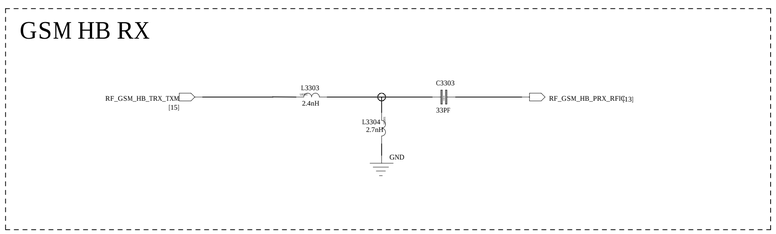
GSM HB RX

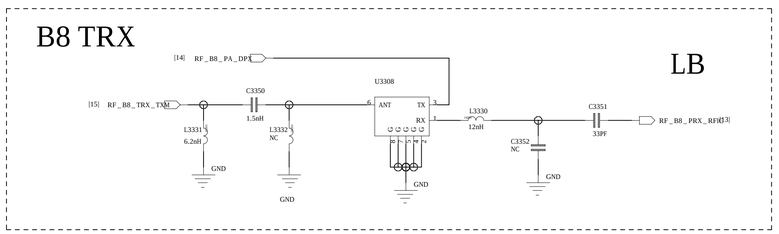
B8 TRX
LB

DRX Antenna

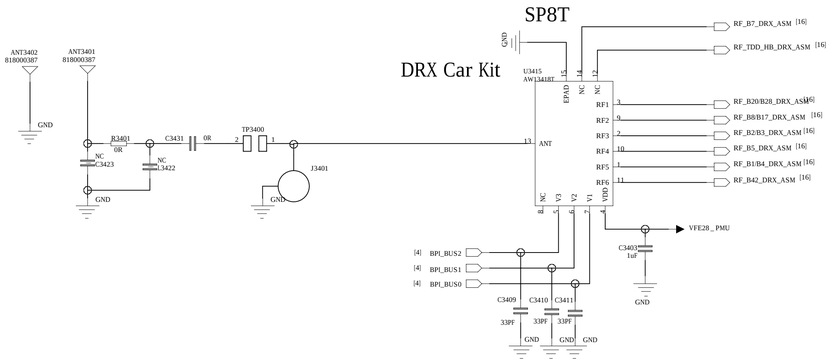

Band 1/4

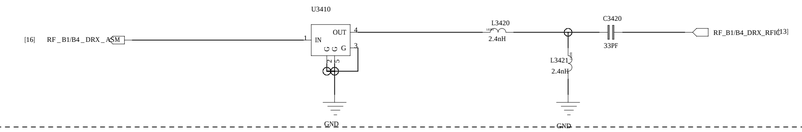

Band 2/3

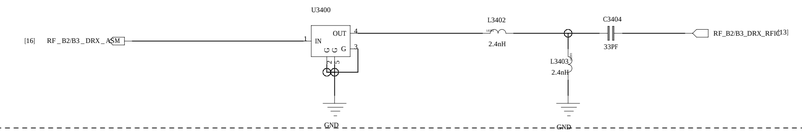

Band 5

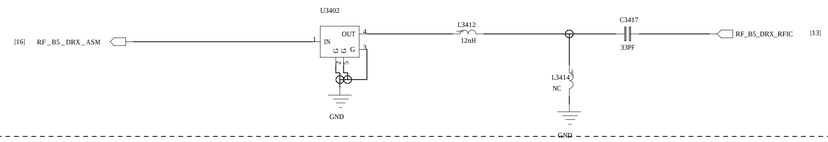

Band 7

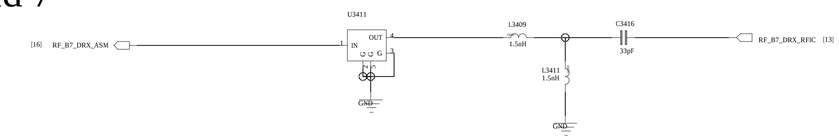

Band 40/41

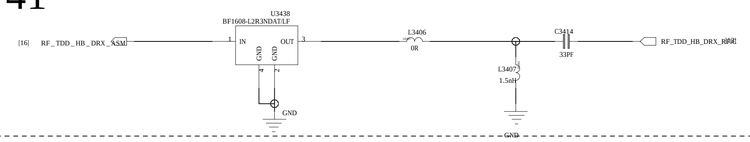

Band 8/17

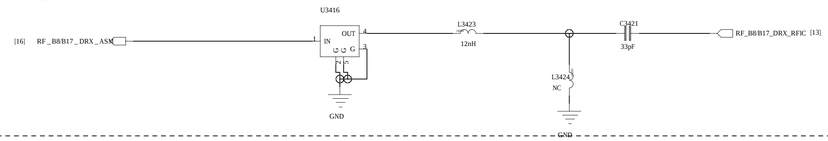

Band 42

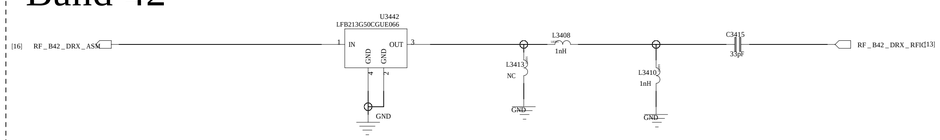

Band 20/28

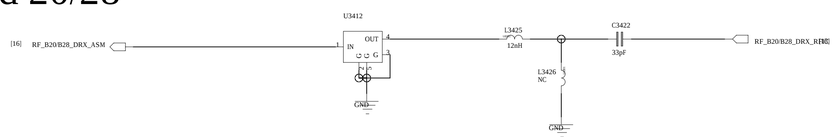

Title	17 _ RF _ MT6177M _ RF _ DRX
Size A1	MTK Confidential
Date: Monday, August 14, 2017	Sheet 16 of 25

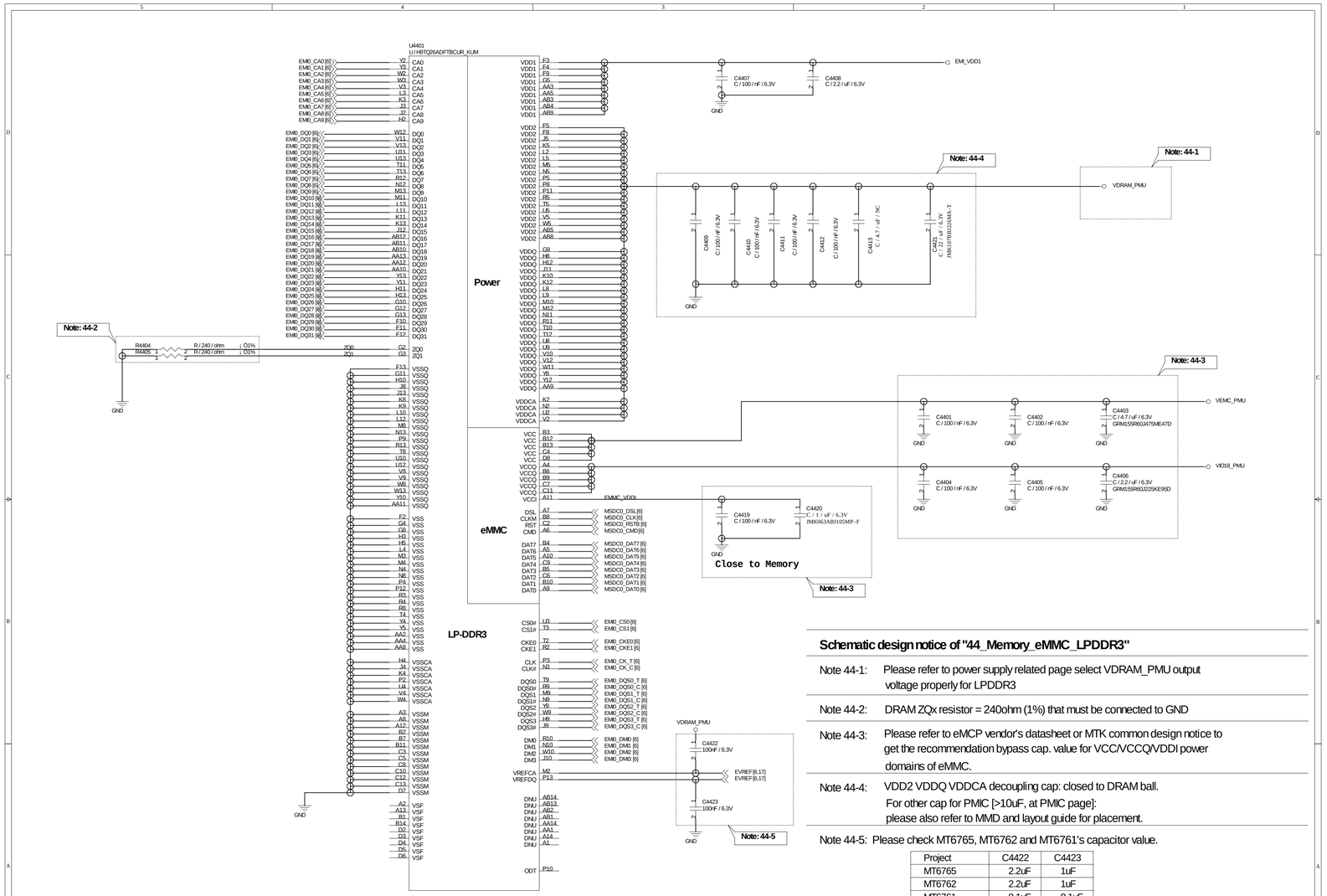

Schematic design notice of "44_Memory_eMMC_LPDDR3"

Note 44-1:	Please refer to power supply related page select VDRAM_PMU output voltage properly for LPDDR3
Note 44-2:	DRAM ZQx resistor = 240ohm (1%) that must be connected to GND
Note 44-3:	Please refer to eMCP vendor's datasheet or MTK common design notice to get the recommendation bypass cap. value for VCC/VCCQ/VDDI power domains of eMMC.
Note 44-4:	VDD2 VDDQ VDDCA decoupling cap: closed to DRAM ball. For other cap for PMIC [>10uF, at PMIC page]: please also refer to MMD and layout guide for placement.

Note 44-5: Please check MT6765, MT6762 and MT6761's capacitor value.

Project	C4422	C4423
MT6765	2.2uF	1uF
MT6762	2.2uF	1uF
MT6761	0.1uF	0.1uF

Title: 44_Memory_eMMC_LPDDR3

Size: A1 — MTK Confidential

Date: Wednesday, November 07, 2018 — Sheet 17 of 25

NANO _ SIM1

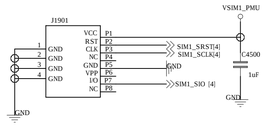

NANO _ SIM2

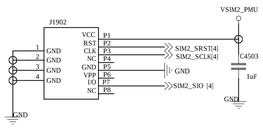

T _ Card

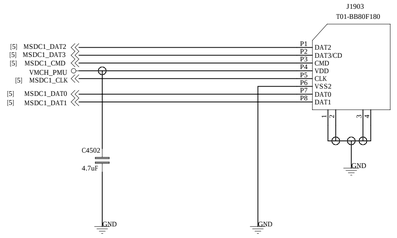

Title	19 _ SIM _ SD Card _ LED
Size: A1	MTK Confidential
Date: Friday, December 08, 2017	Sheet 18 of 25

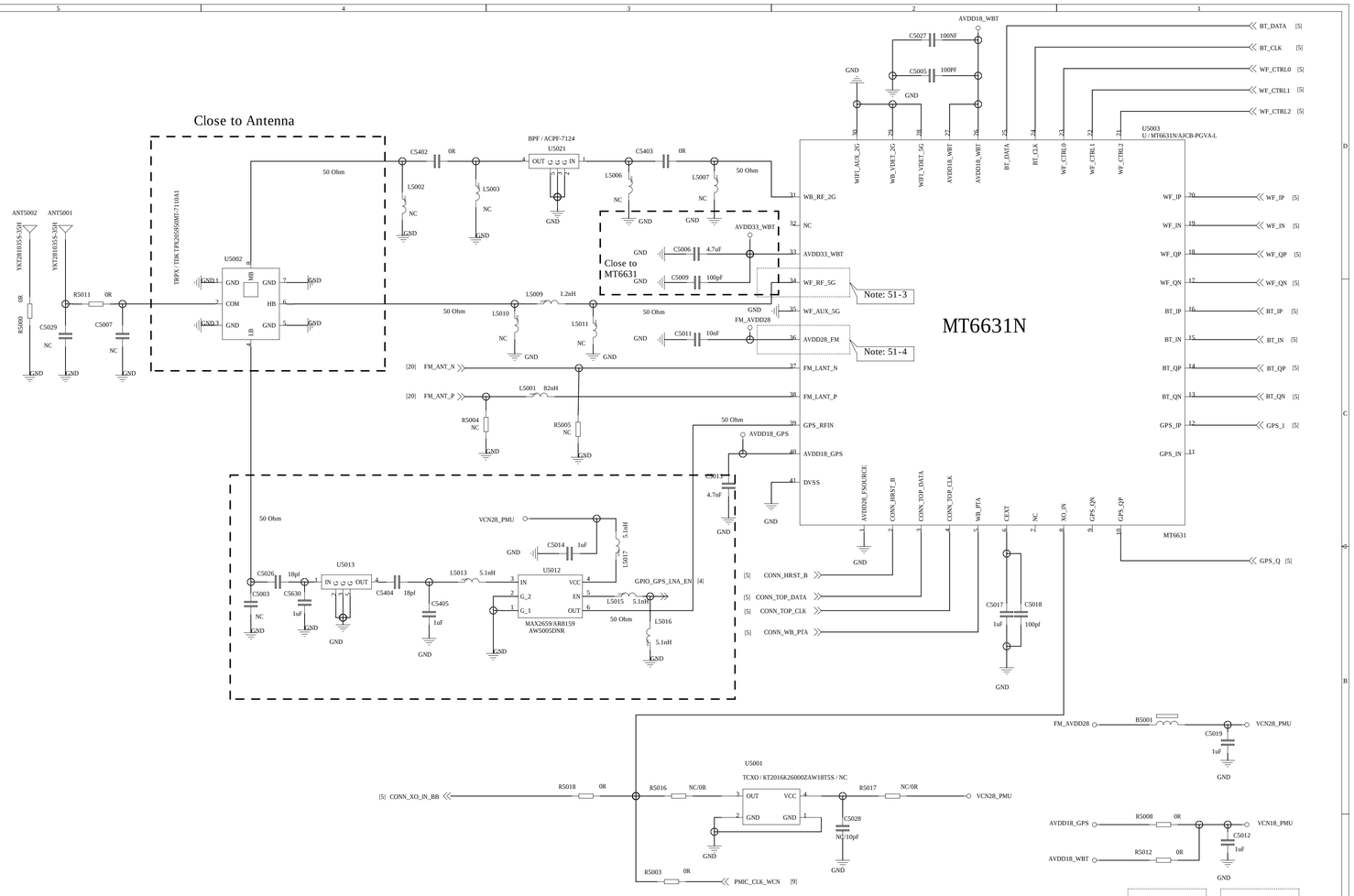

PMIC R5016/R5017 NC, R5003/R8005 0ohm
TCXO R5016/R5017 0ohm, R5003/R8005 NC

Schematic design notice of "51_CONNECTIVITY_CONSYS_MT6631"

Note 51-1:	For R5015 size, please select 0402 size or larger one
Note 51-2:	Please refer to MT6765 Baseband design notice for VCN33 LDO selection guide
Note 51-3:	If WiFi 5G not support, connect pin 34(WF_RF_5G) to GND
Note 51-4:	Pin 36 (AVDD28_FM) must be connected to VCN28 even if FM not support

Title: 20 _CONNECTIVITY _CONSYS _MT6631

Size: A1

MTK Confidential

Date: Friday, December 08, 2017 Sheet 19 of 25

Earphone Audio

Earphone EINT

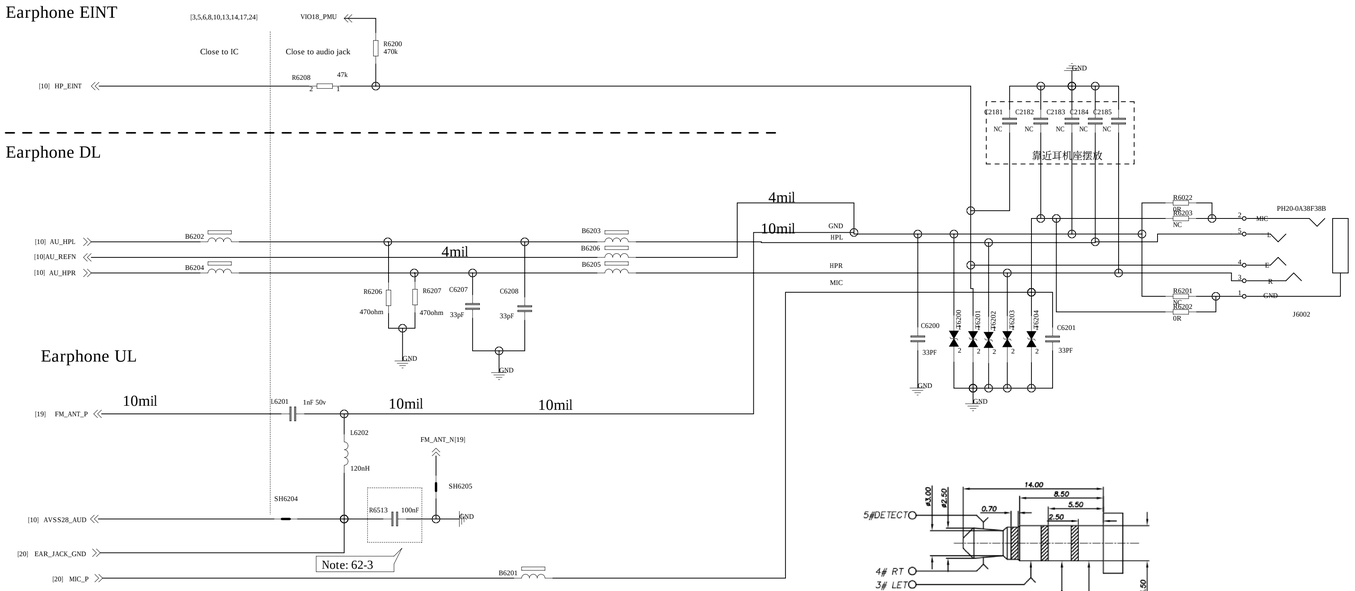

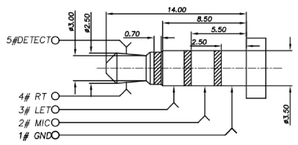

Earphone DL

Earphone Microphone

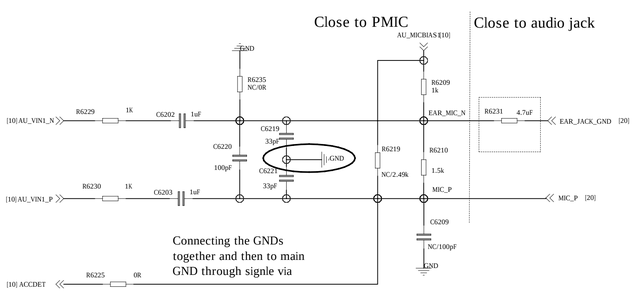

Note 62-3:

	Earphone Jack @ Main board	Earphone Jack @ Sub board
R6513	0 ohm	100nF

Title	21 _ EARPHONE
Size A1	MTK Confidential
Date: Friday, December 08, 2017	Sheet 20 of 25

Receiver

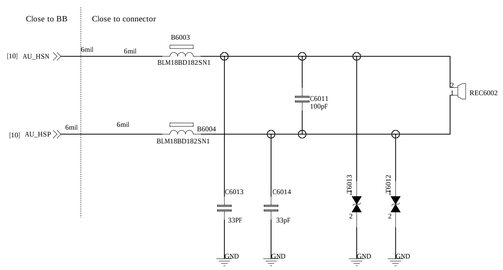

Microphone

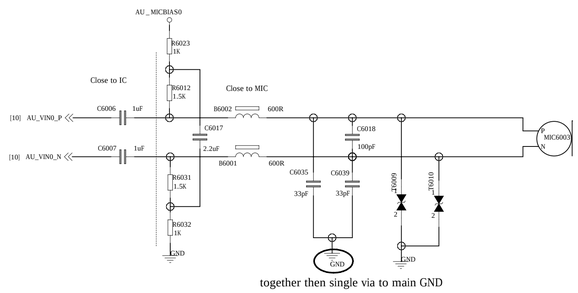

AW8733
Speaker

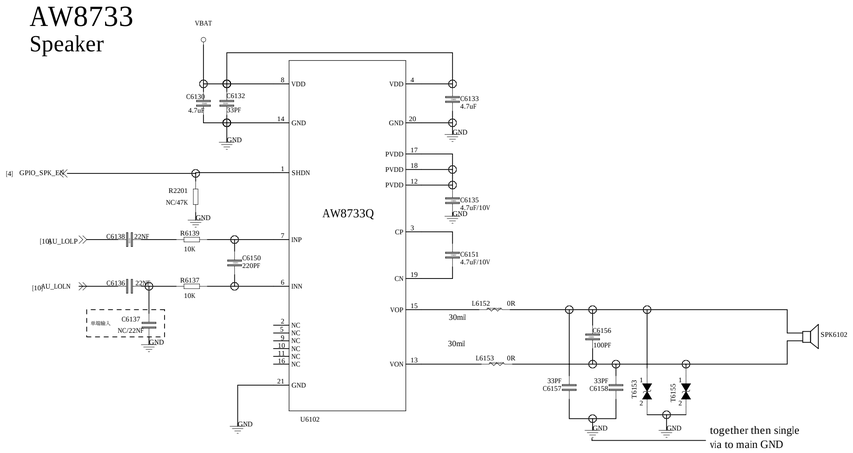

Title	22_MIC_AUDIO_VIBR
Size A1	MTK Confidential
Date: Friday, December 08, 2017	Sheet 21 of 25

Rear and Front Camera

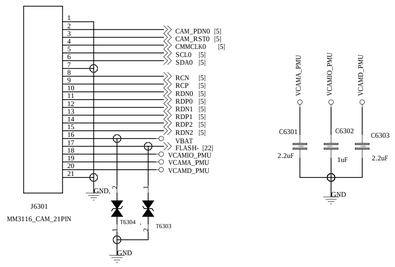

³äµçÖ¸Ê¾µÆ

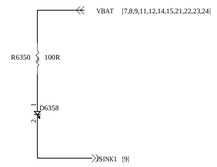

VIBRATOR

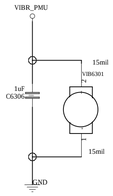

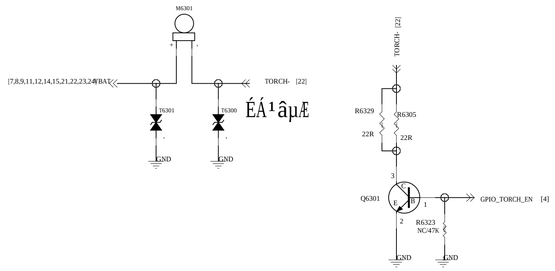

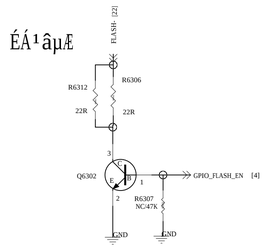

Title	63_PERI_CAMERA
Size A1	MTK Confidential
Date: Wednesday, November 28, 2018	Sheet 22 of 25

REVISION RECORD			
LTR	ECO NO:	APPROVED:	DATE:

KEYPAD

KEYPAD LED

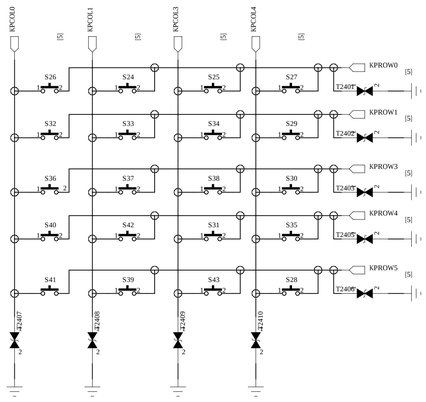

Power Key

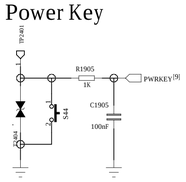

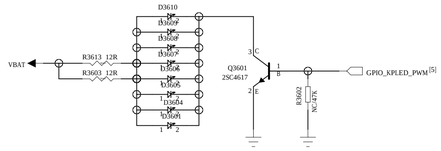

Debug

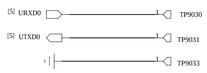

Hole

DRAWN: <Drawn By>	DATED: <Drawn Date>	COMPANY: <Company Name>		
		TITLE: <Title>		
CHECKED: <Checked By>	DATED: <Checked Date>	CODE: <Code>	SIZE: A1	DRAWING NO: <Drawing Number> REV: <Revision>
QUALITY CONTROL: <QC By>	DATED: <QC Date>			
RELEASED: <Released By>	DATED: <Release Date>	SCALE: <Scale>		SHEET: 23 25

REVISION RECORD			
LTR	ECO NO:	APPROVED:	DATE:

SPI Display

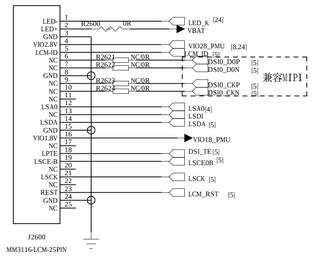

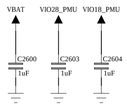

BackLight

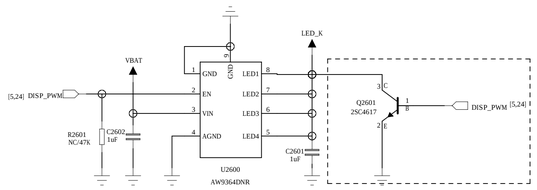

DRAWN: <Drawn By>	DATED: <Drawn Date>	COMPANY: <Company Name>			
		TITLE: <Title>			
CHECKED: <Checked By>	DATED: <Checked Date>	CODE: <Code>	SIZE: A1	DRAWING NO: <Drawing Number>	REV: <Revision>
QUALITY CONTROL: <QC By>	DATED: <QC Date>				
RELEASED: <Released By>	DATED: <Release Date>	SCALE: <Scale>		SHEET: 24 25	