DWG. NO.: A3
020678114-2813

ALL DIMENSIONS IN MILLIMETERS UNLESS OTHERWISE STATED. DO NOT SCALE - IF IN DOUBT, ASK!! SEE COVER SHEET FOR PERTINENT INFORMATION

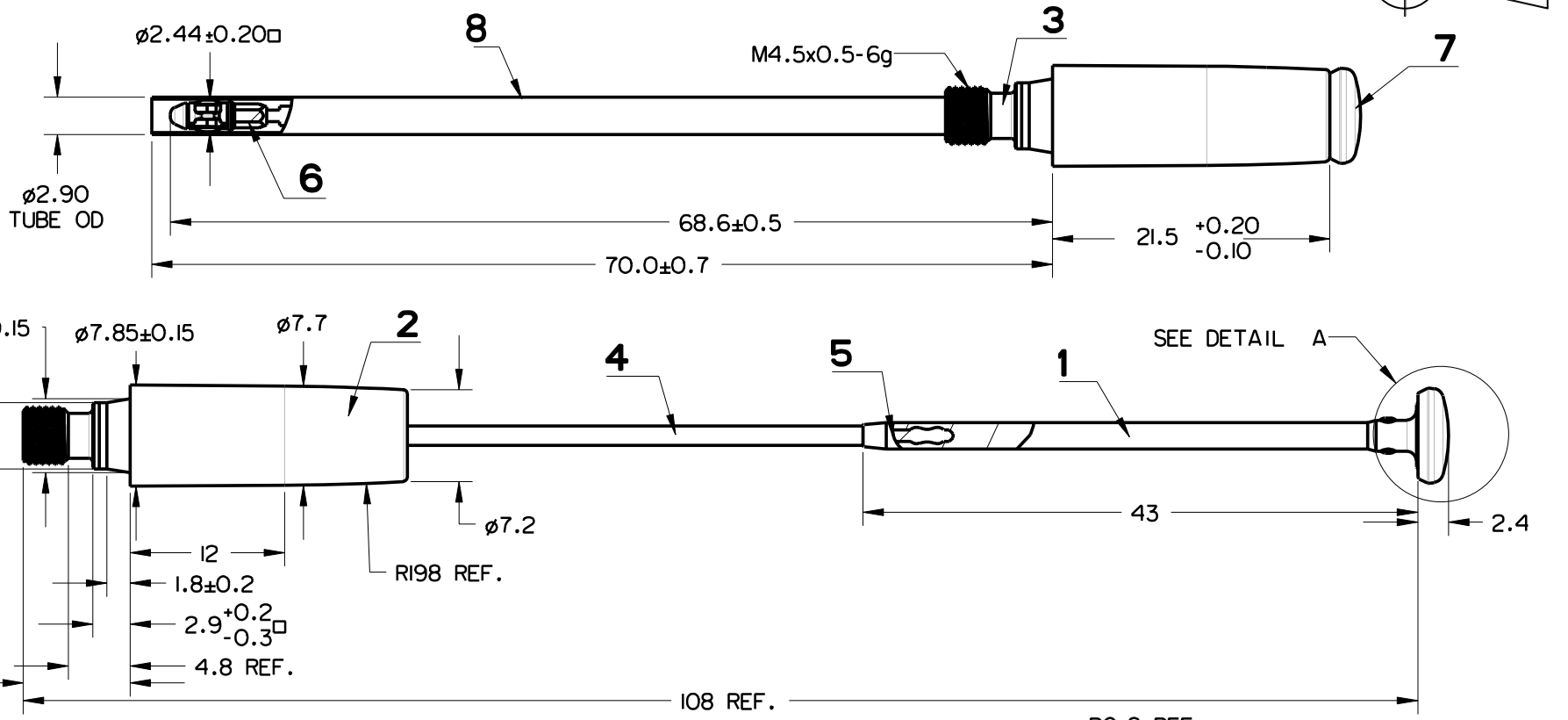

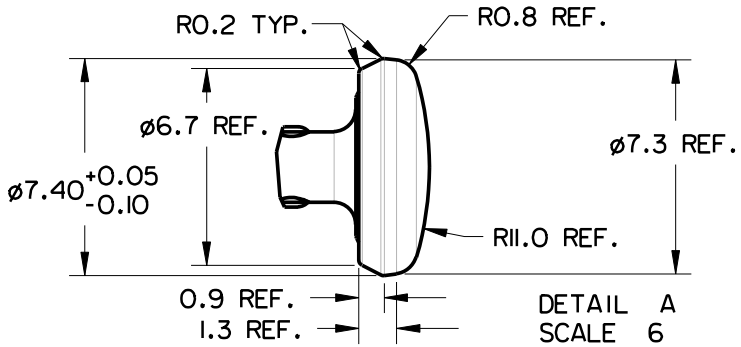

NO	MATERIAL	FINISH
8	Plastic: PA12	Color: Black
7	Free Cutting Brass ISO CuZn39Pb3 (MS 58A)	Sn-Co Plating
6	Free Cutting Brass ISO CuZn39Pb3 (MS 58A)	
5	Ni-Ti-Cr Super Elastic Alloy	
4	Plastic: Poliurethane-Shore 40D	Color: Cool Gray 7C
3	Free Cutting Brass ISO CuZn39Pb3 (MS 58A)	
2	Plastic: Grilamid ELY	Color: Silver, UV Coating
1	Plastic: Nylon 6/6	Color: Cool Gray 7C

CAD FILE: 020678114-2813CLOSE

GALTRONICS CONFIDENTIAL PROPRIETARY INFORMATION - MAY NOT BE COPIED OR DISCLOSED

GALTRONICS
THIS PRINT IS GALTRONICS CONFIDENTIAL

ENGINEER	OS	CHECKED	
DRAWN	MB	APPVD.	
DATE	23.6.04	DATE	

ANTENNA M4.5 STUD
CDMA/AMPS/PCS/GPS
CURITEL TX160C

DWG. NO.: A3
020678114-2813

REV. P3