TX6201

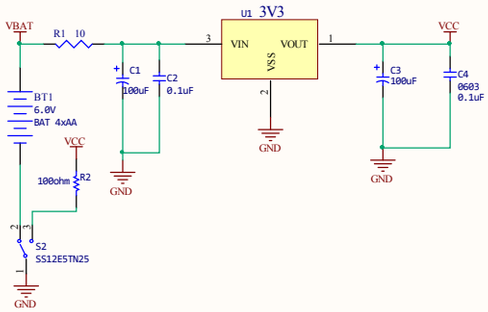

2425MHz,2431MHz,2434MHz and 2445MHz

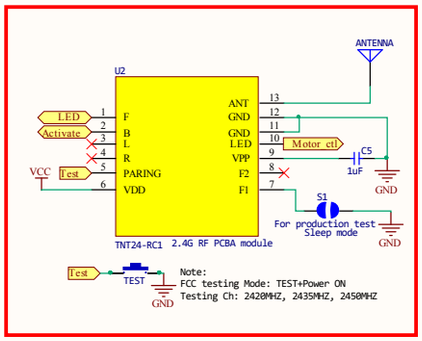

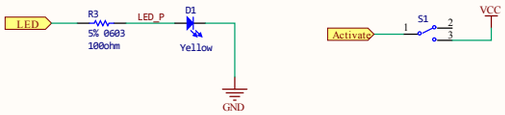

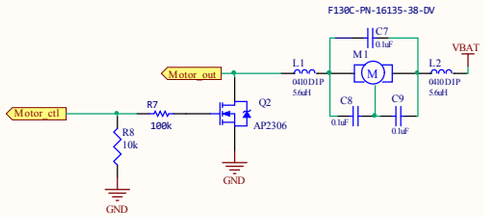

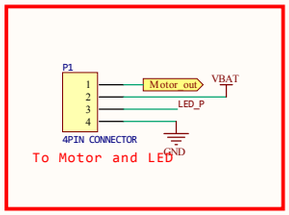

Standard Common part for master

Capacitor
(1st priority)

No:	Part Value
1	10PF chip 50v +80-20% SMD 0603
2	20pF chip 50v +80-20% SMD 0603
3	25pF chip 50v +80-20% SMD 0603
4	1000pF chip 50v +80-20% SMD 0603
5	0.1uF chip 50V +80-20% Y5V, 50V SMD0603 0.1uF 25V +80-20% Y5V, PKG: Ceramic dia 6mm x 3.5
6	0.033uF 25V,Y5V ,PKG: dia 4mm x 3.5
7	10uF 25V +/-20% AL EL PKG:5x11mm
8	47uF 25V +/-20% AL EL PKG:5x11mm
9	100uF 25V +/-20% AL EL PKG:5x11mm
10	220uF 25V +/-20% AL ELPKG:5x11mm
Resistor:	
1	10 ohm +/-5% 0603
2	100 ohm +/-5% 0603
3	1K ohm +/-5% 0603
4	4.7Kohm +/-5% 0603
5	10k ohm +/-5% 0603
6	47k ohm +/-5% 0603
7	100kohm +/-5% 0603
8	220k ohm +/-5% 0603
9	1M ohm +/-5% 0603
10	2.2M ohm +/-5% 0603
Diode:	
1	IN4001PKG: DO-41 50V
2	IN4148 PKG: DO-35 50V
3	1N5817: DO-41 50V
4	BAT54 SOT23 30V
Transistor	
1	S8050DNPN (1.5A)SOT-23.V: 40; W: 0.3;
2	S8550D PNP(1.5A)SOT-23.V: 40; W: 0.3;
3	S9014D NPN (1.5A)SOT-23.V: 40; W: 0.3;
4	B772 PNP A: 3; V: 40; Max. W: 1.25; PKG: TO-126;
5	D882 NPN A: 3; V: 40; Max. W: 1.25; PKG: TO-126;
Inductor	
1	Choke Coil DESC: 5.6uH 10% 1/2W
PTC	
1	MF-R400-0-99

Non Standard parts Guide Line (2nd priority)
Using E3 value for resistor, capacitor and inductor
Standard IEC E3 Decade Value = 100, 220 & 470
Non Standard parts Guide Line (3rd priority)
Using E6 value for resistor, capacitor and inductor
Standard IEC E6 Decade value =100,150,220,330,470 & 680

TEST MODE:	REMARKS:	IC information:	History

MATTEL MAPS All rights reserved

Size	Number	Project Name :	Revision
A3	CHT62	Mega City RX	R1
	MAPS Engineer : Rain Wang		
Date : 12/18/2015		Sheet of	

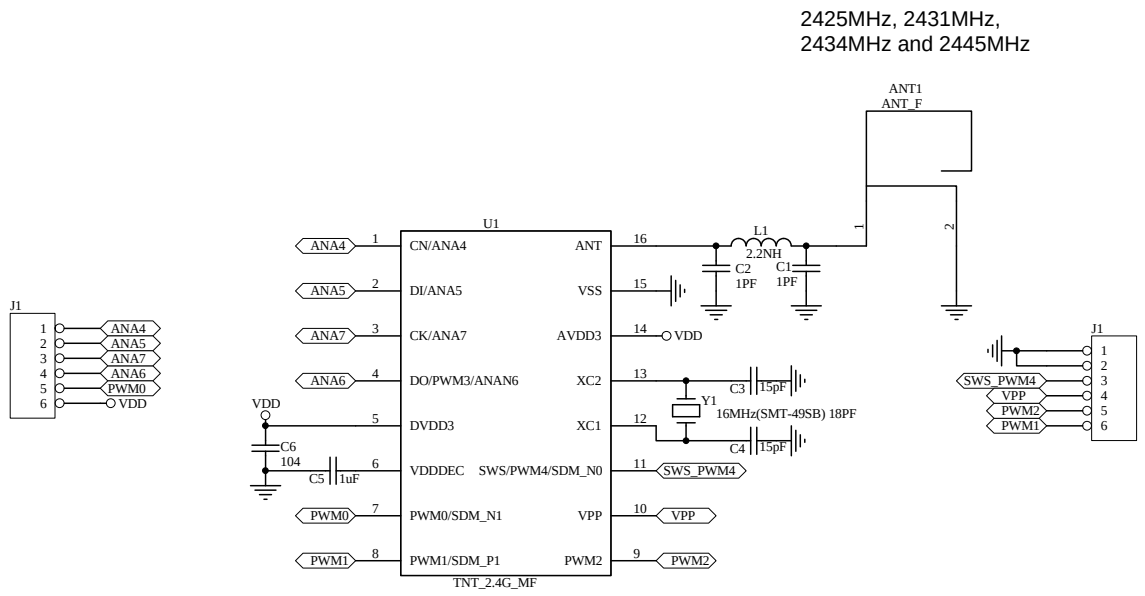

Title	TNT24-MF MODULE SCH	
Size A4	Number T14A70	Revision A1E
Date: 19-Aug-2015	Sheet of 1 / 1	
File: D:\项目文件\泰凌微\TNT24-MF MODULE.DSCH	Drawn By: JEFF	