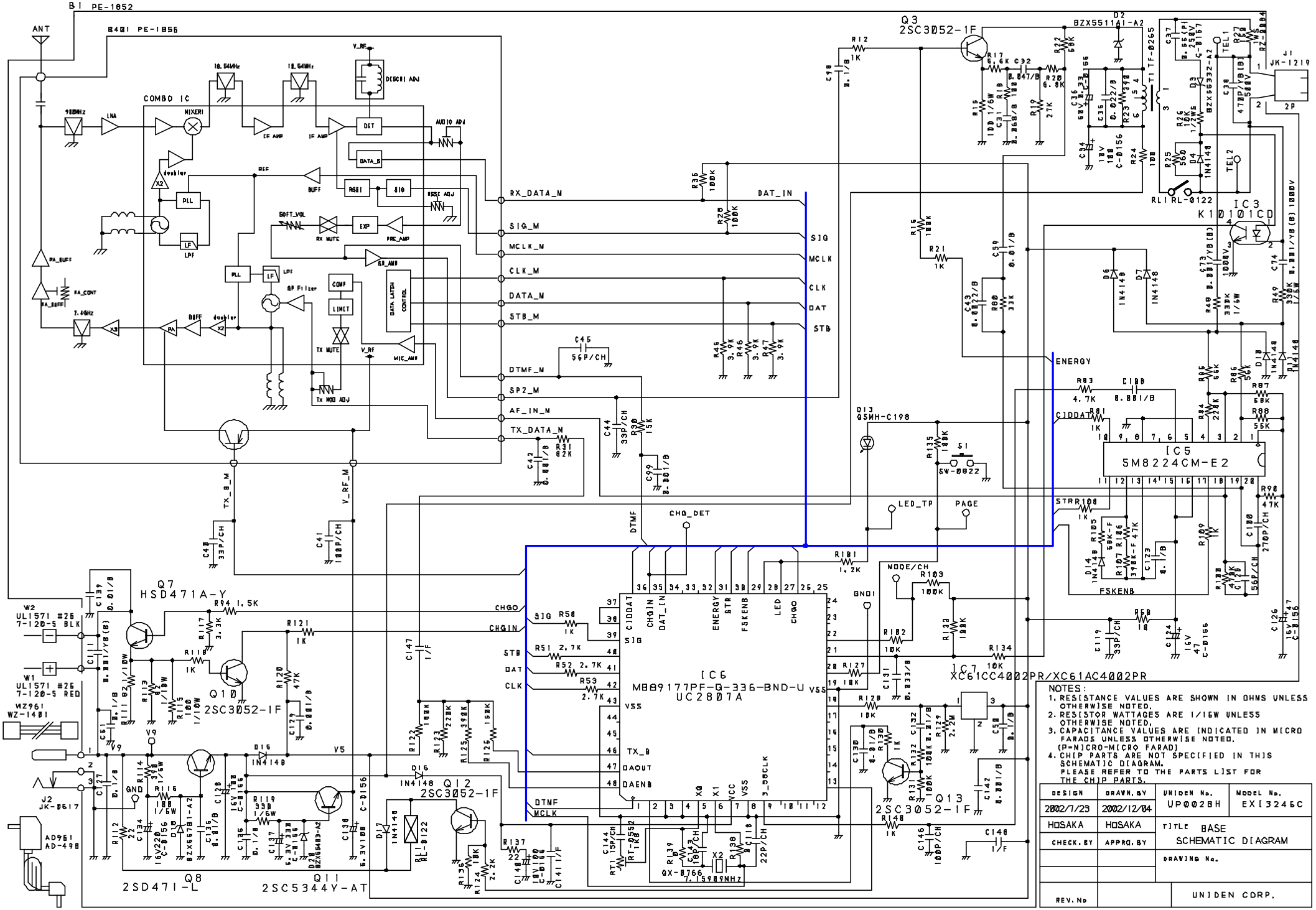
B1 PE-1052
B401 PE-1056
ANT
COMBO IC
MIXER1
LNA
DET
DATA_S
RSSI
SIO
DLL
LF
LPF
EXP
PRE_AMP
BUFF
doubler
PA_BUFF
PA_CONT
PA
COMP
LIMIT
TX MUTE
TX MOD ADJ
MIC_AMP
DATA LATCH CONTROL
RX_DATA_N
SIG_M
MCLK_N
CLK_M
DATA_N
STB_M
DTMF_N
SP2_M
AF_IN_N
TX_DATA_N
DAT_IN
SIG
MCLK
CLK
DAT
STB
ENERGY
CIDDAT
LED_TP
PAGE
CHG_DET
DTMF
CHGO
CHGIN
MODE/CH
FSKENB
GND1
IC6
M88917PF-0-336-BND-U
UC2807A
IC5
5M8224CM-E2
IC3
K1010CD
IC7
XC61CC4002PR/XC61AC4002PR
Q3
2SC3052-1F
Q7
HSD471A-Y
Q10
2SC3052-1F
Q12
2SC3052-1F
Q13
2SC3052-1F
Q8
2SD471-L
Q11
2SC5344Y-AT
RL1 RL-0122
J1
JK-1219
J2
JK-0617
W1
UL1571 #26
7-120-5 RED
W2
UL1571 #26
7-120-5 BLK
WZ961
WZ-1401
AD961
AD-498
NOTES:
1. RESISTANCE VALUES ARE SHOWN IN OHMS UNLESS OTHERWISE NOTED.
2. RESISTOR WATTAGES ARE 1/16W UNLESS OTHERWISE NOTED.
3. CAPACITANCE VALUES ARE INDICATED IN MICRO FARADS UNLESS OTHERWISE NOTED. (P=MICRO-MICRO FARAD)
4. CHIP PARTS ARE NOT SPECIFIED IN THIS SCHEMATIC DIAGRAM. PLEASE REFER TO THE PARTS LIST FOR THE CHIP PARTS.
DESIGN
2002/7/23
DRAWN. BY
2002/12/04
UNIDEN No.
UP00208H
MODEL No.
EXI3245C
HOSAKA
HOSAKA
TITLE
BASE SCHEMATIC DIAGRAM
CHECK. BY
APPRO. BY
DRAWING No.
REV. No
UNIDEN CORP.

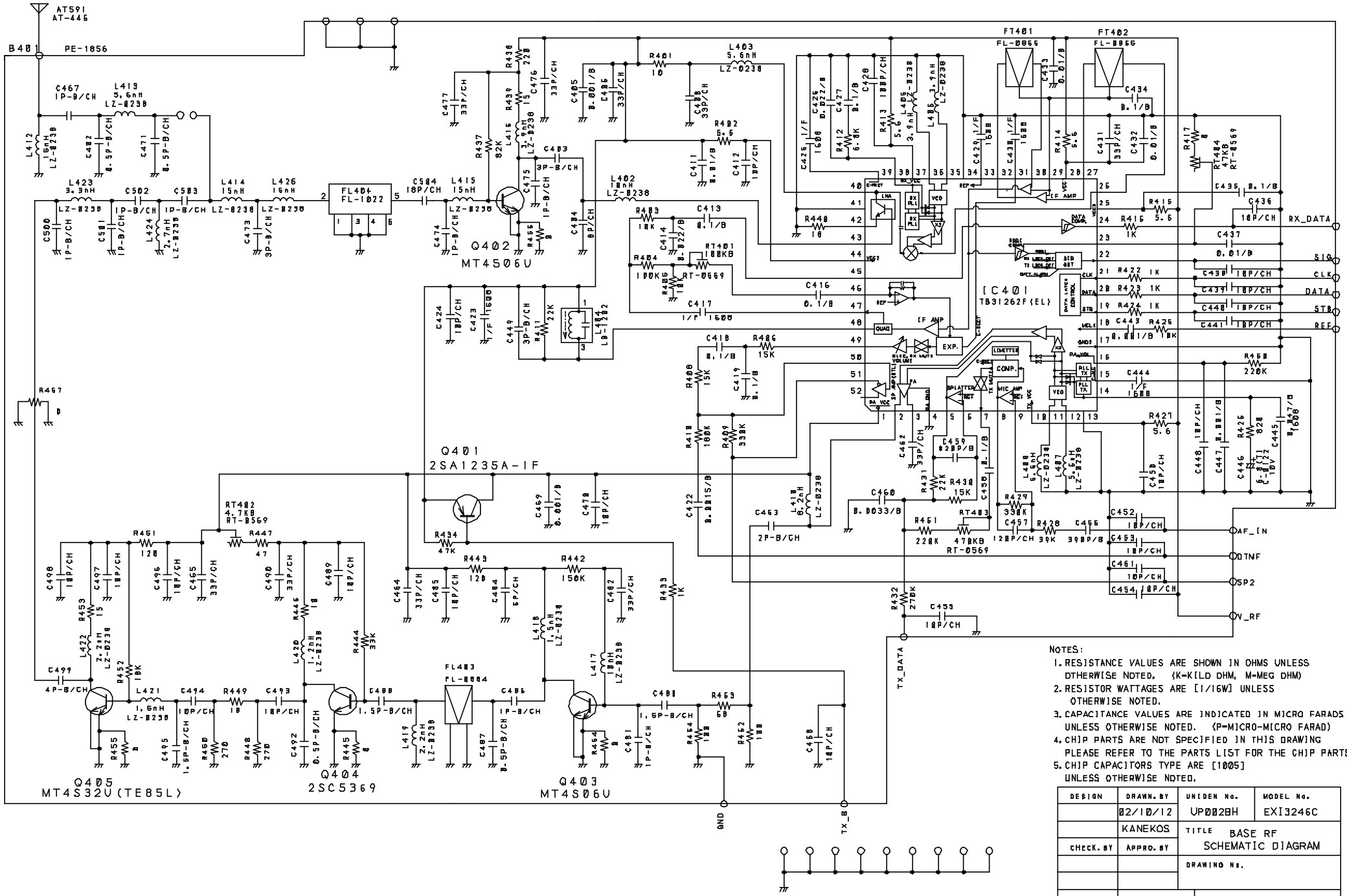

NOTES:

1. RESISTANCE VALUES ARE SHOWN IN OHMS UNLESS OTHERWISE NOTED. (K=KILO OHM, M=MEG OHM)
2. RESISTOR WATTAGES ARE [1/16W] UNLESS OTHERWISE NOTED.
3. CAPACITANCE VALUES ARE INDICATED IN MICRO FARADS UNLESS OTHERWISE NOTED. (P=MICRO-MICRO FARAD)
4. CHIP PARTS ARE NOT SPECIFIED IN THIS DRAWING PLEASE REFER TO THE PARTS LIST FOR THE CHIP PARTS.
5. CHIP CAPACITORS TYPE ARE [1005] UNLESS OTHERWISE NOTED.

DESIGN	DRAWN. BY	UNIDEN No.	MODEL No.
	02/10/12	UP0028H	EXI3246C
	KANEKOS	TITLE BASE RF SCHEMATIC DIAGRAM	
CHECK. BY	APPRO. BY		
		DRAWING No.	
REV. No		UNIDEN CORP.	