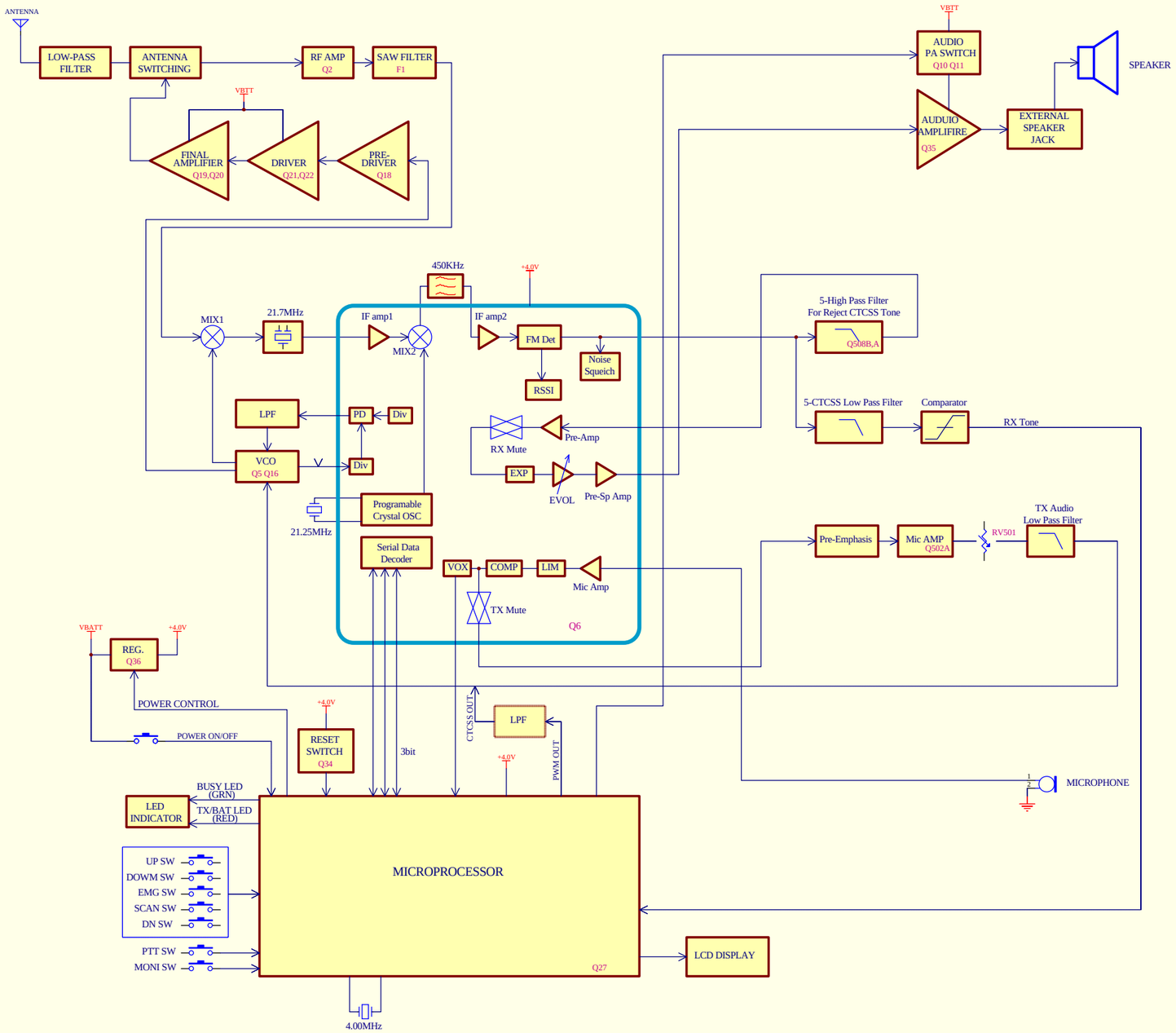

Title	GMRS-1200L BLOCK DIAGRAM		Kyosey Co., Ltd.
Size: A2	Number: E72-00024Z	Revision:	
File:		Date: MAR 22, 2002 Time:	Sheet 1 of 1
Drw: Nakamura	Chk:	Apr:	