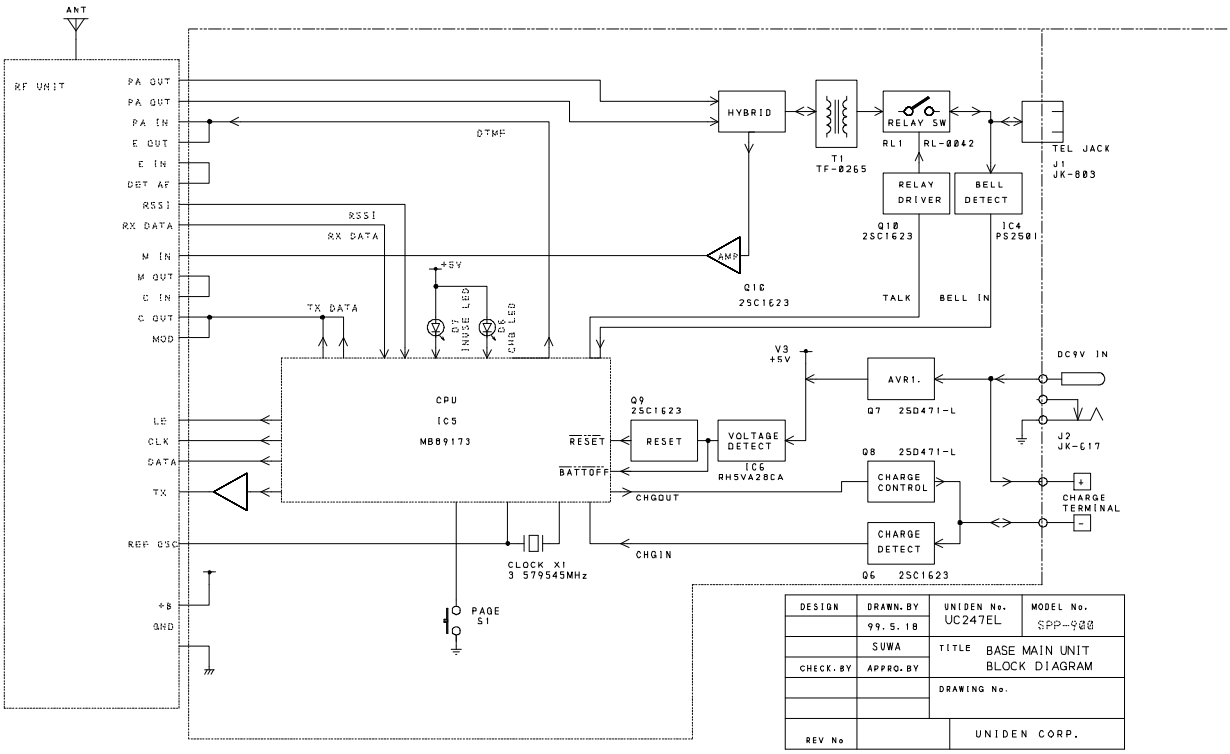

DESIGN	DRAWN. BY	UNIDEN No.	MODEL No.
	99.5.18	UC247EL	SPP-900
	SUWA	TITLE	BASE MAIN UNIT BLOCK DIAGRAM
CHECK. BY	APPRO. BY		
		DRAWING No.	
REV No		UNIDEN CORP.	