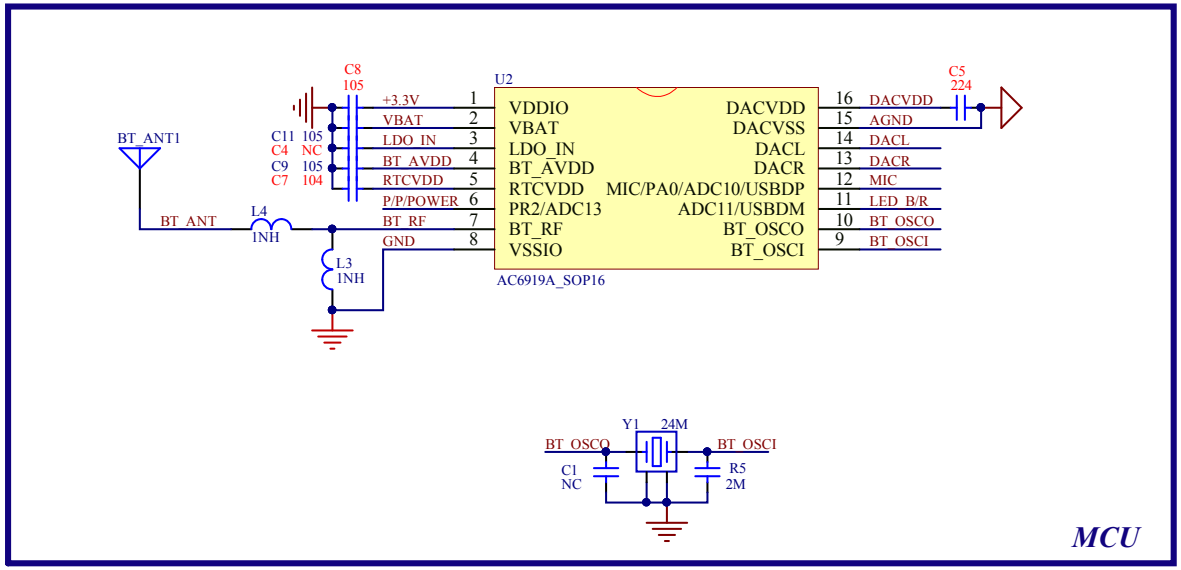

MCU

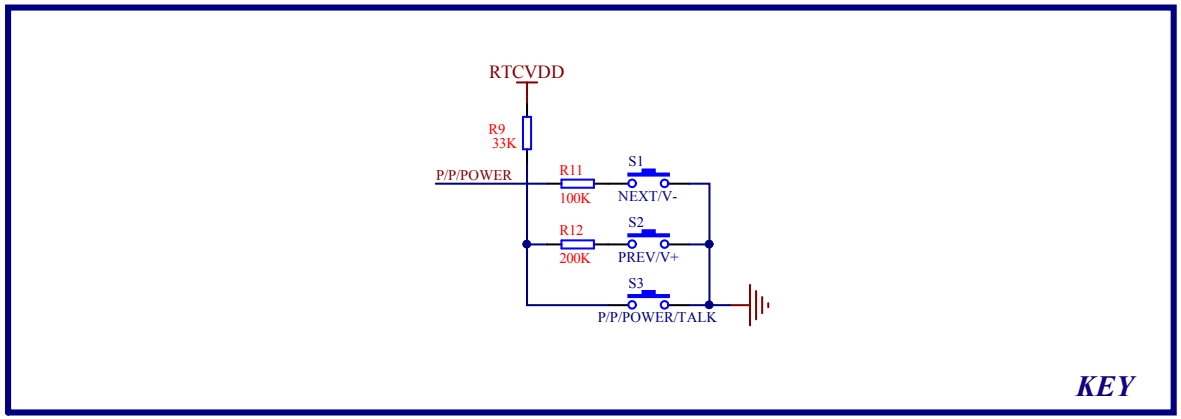

KEY

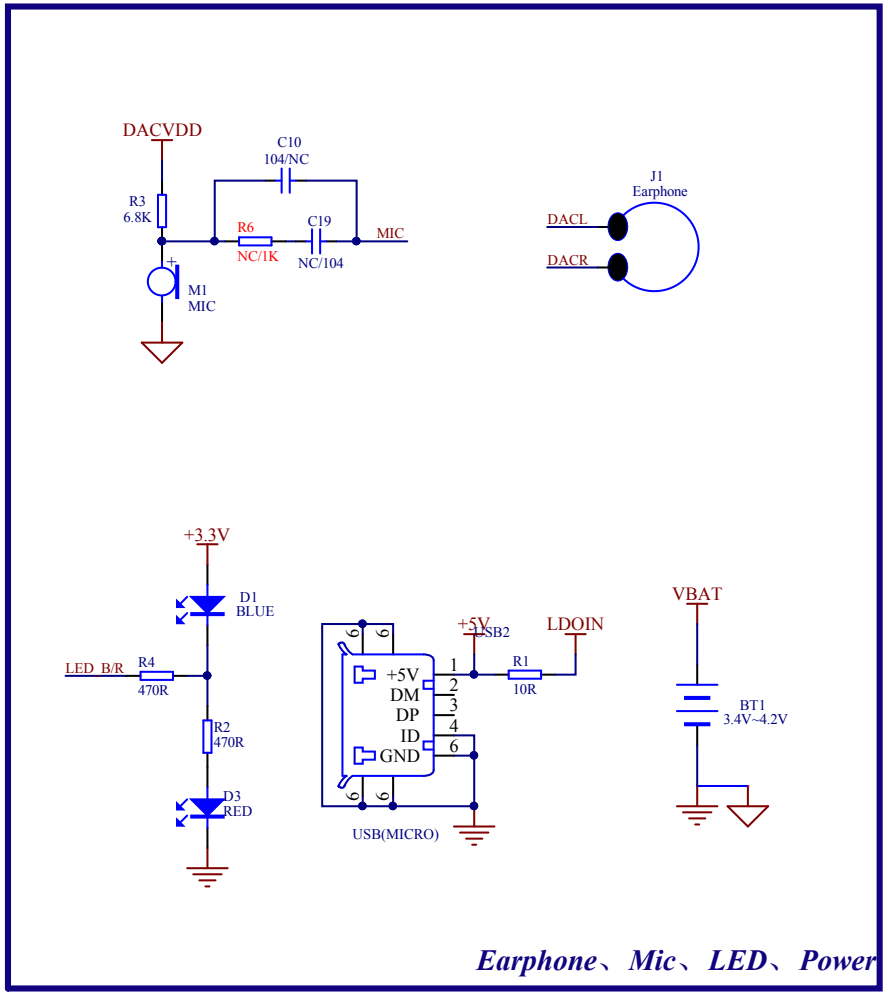

Earphone、Mic、LED、Power