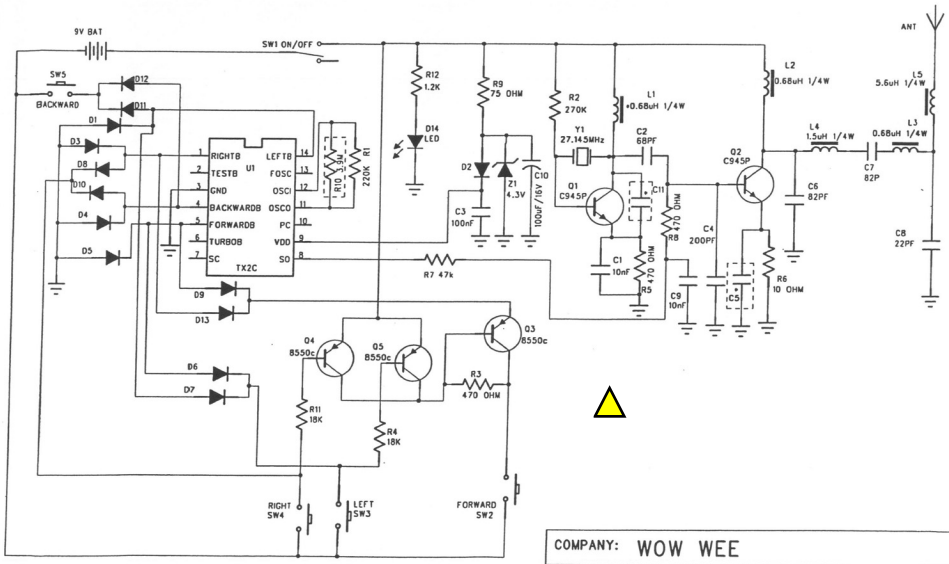

COMPANY: WOW WEE			
TITLE: 02230TX			
DRAWING:ZHUWEIMING	DATE28/FEB/02	REV: 00	P/N:
CHECKED:ZHUWEIMING	DATE:28/FEB/02	SCALE:	SHEET1 OF 1