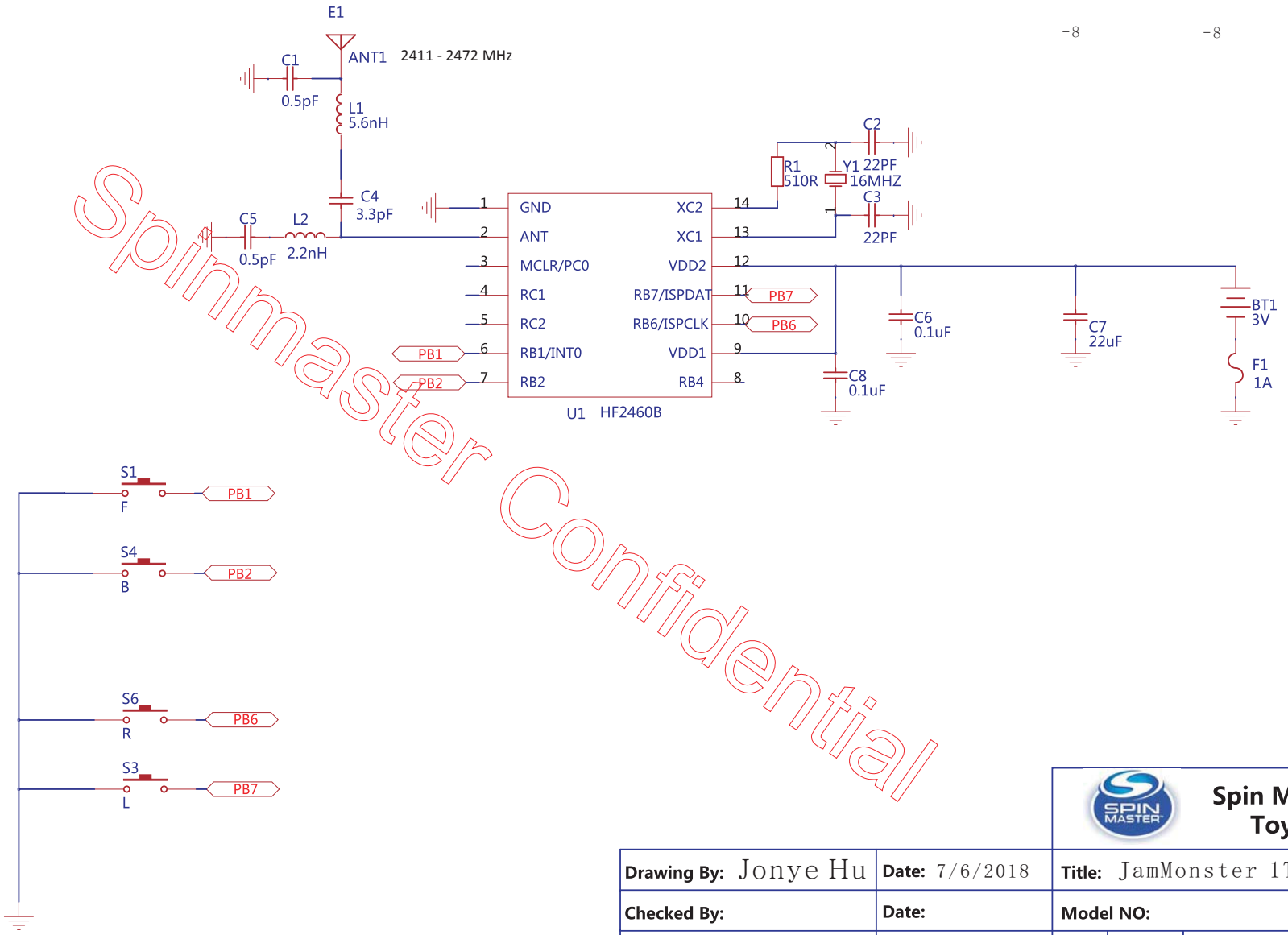

Spinmaster Confidential

Spin Master DongGuan Toys Co. Ltd			
Drawing By: Jonye Hu	Date: 7/6/2018	Title: JamMonster 1T024th TX	
Checked By:	Date:	Model NO:	
Approved By:	Date:	Size A4	Sheet 2 of 3 Revision R01