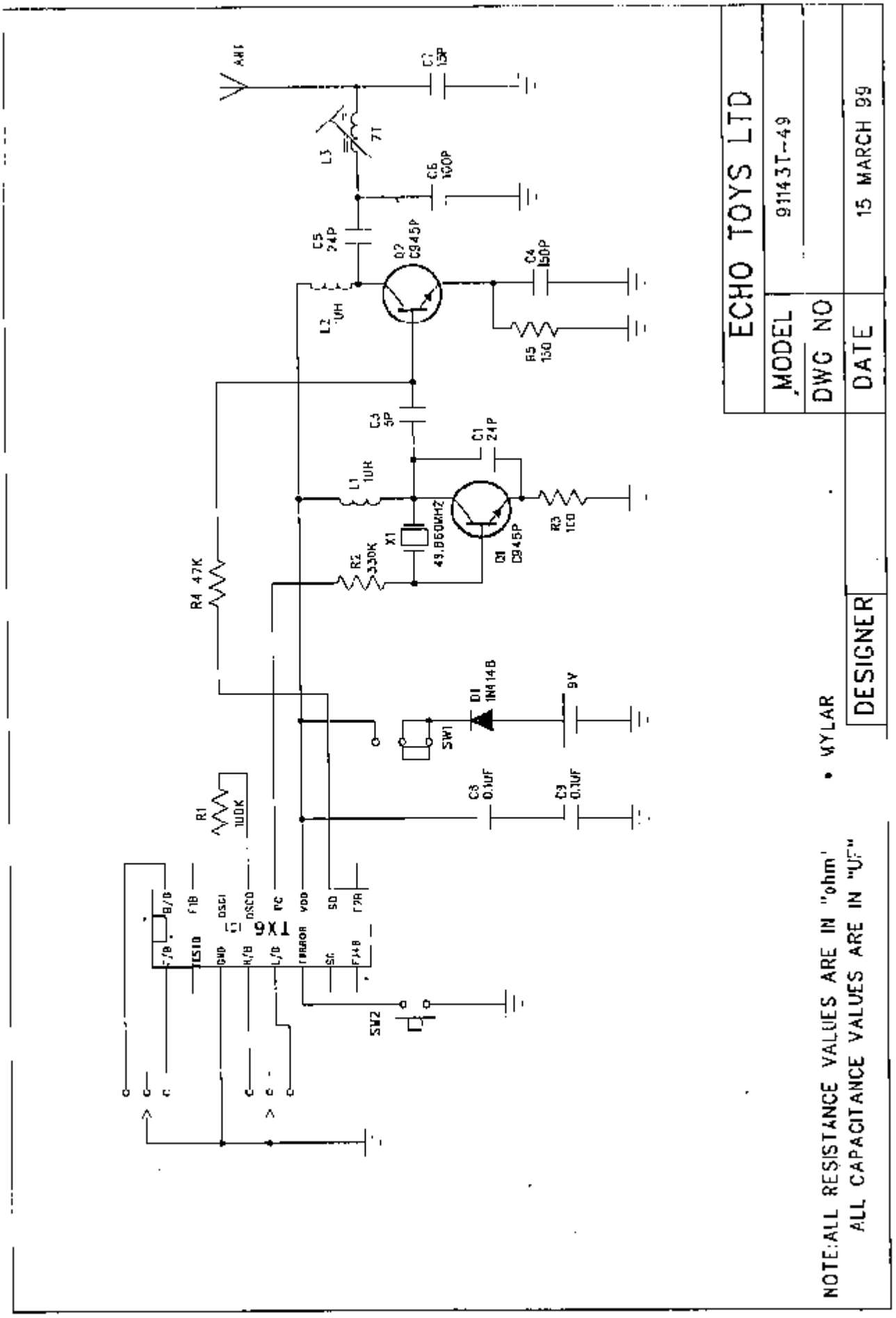
ANT
C7 15P
L3 7T
C6 100P
C5 24P
Q2 C945P
C4 150P
L2 .1UH
R5 150
C3 5P
C1 24P
L1 1UH
X1 49.860MHZ
Q1 C945P
R3 100
R4 47K
R2 330K
D1 1N4148
9V
SW1
C8 0.1UF
C9 0.1UF
R1 100K
TX6
SW2
ECHO TOYS LTD
MODEL
91143T-49
DWG NO
DATE
15 MARCH 99
DESIGNER
• WYLAR
NOTE:ALL RESISTANCE VALUES ARE IN "ohm"
ALL CAPACITANCE VALUES ARE IN "UF"