SENA_SHARK BT_Label & Location

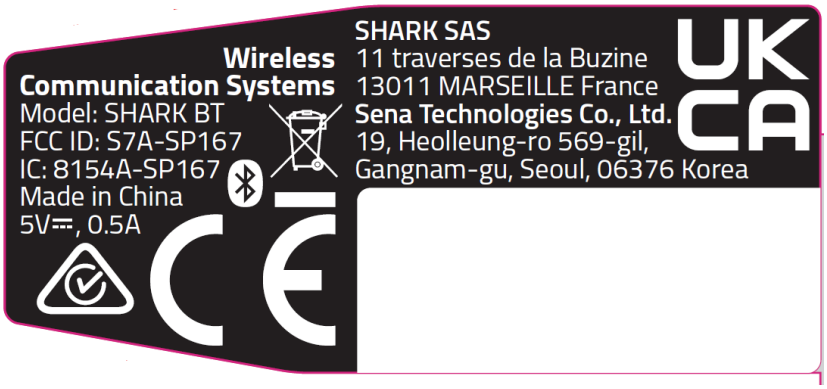

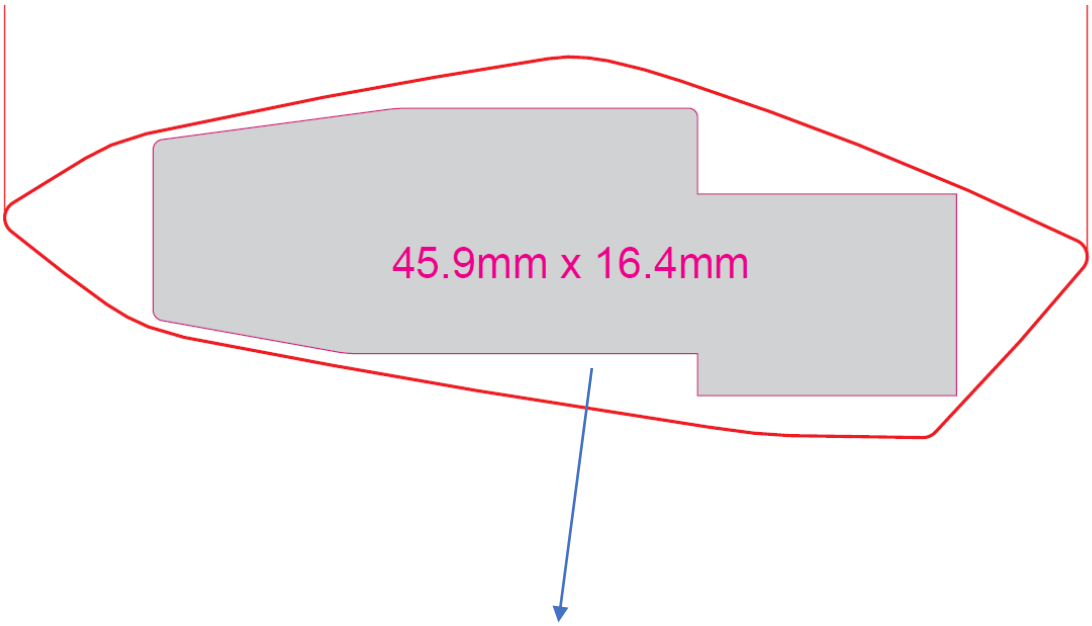

Label Location (Rear)

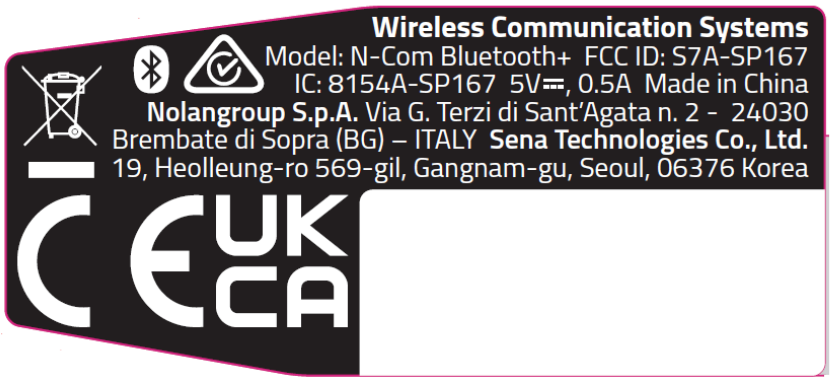

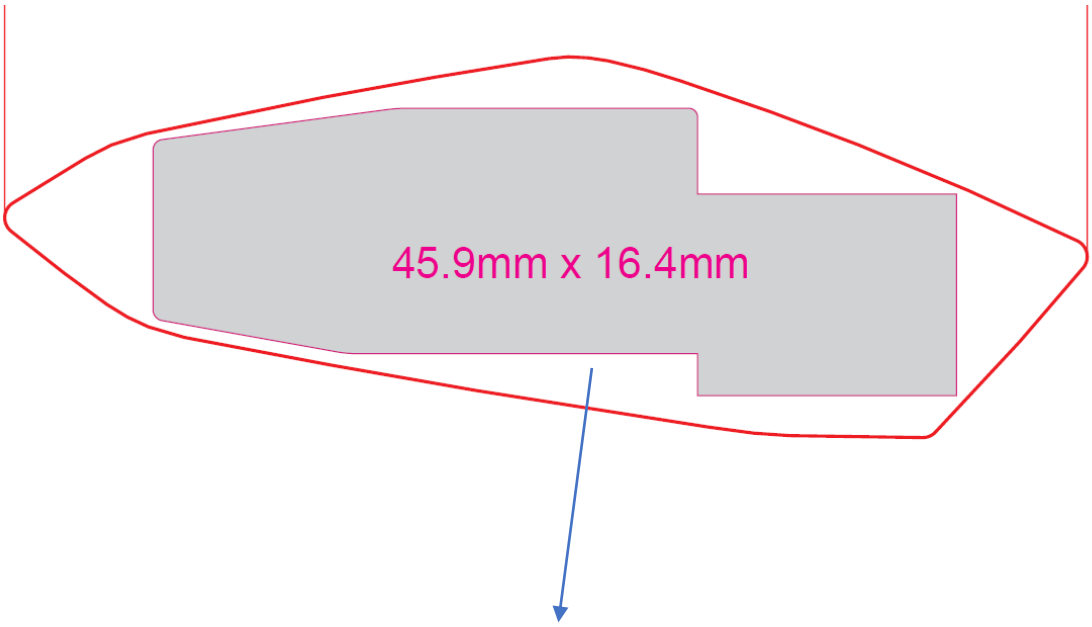

Label Location (Rear)