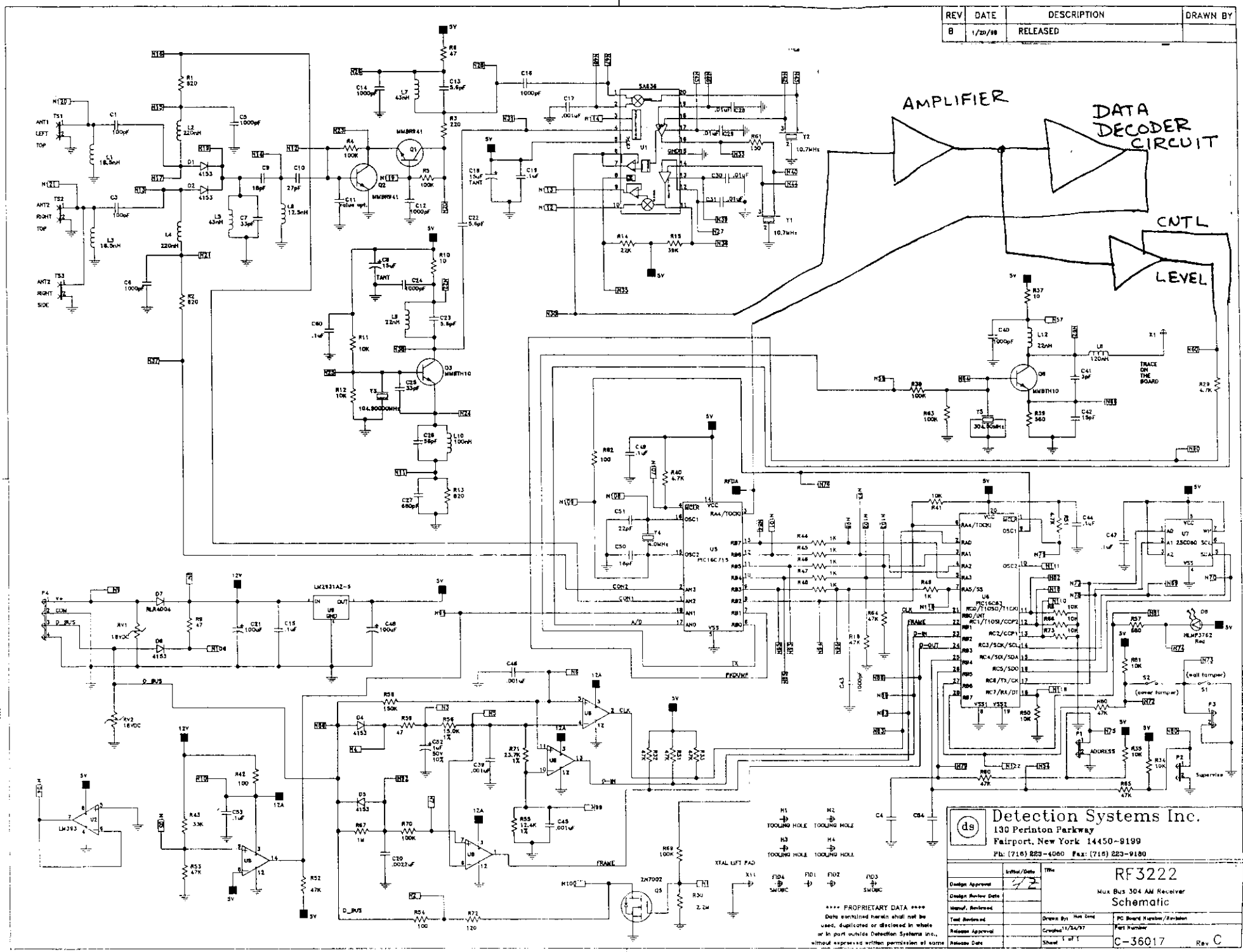REV	DATE	DESCRIPTION	DRAWN BY
B	1/20/98	RELEASED