EMC TEST REPORT

FCC 47 CFR Part 15B, ISED ICES-003 Issue 6

Report Reference No	G0M-2007-9184-EF0115B-V01
Testing Laboratory	Eurofins Product Service GmbH
Address	Storkower Str. 38c 15526 Reichenwalde Germany
Accreditation	DAkkS - Registration number : D-PL-12092-01-03 (ISED) ISED Testing Laboratory site: 3470A-2 DAkkS - Registration number : D-PL-12092-01-04 (FCC) FCC Filed Test Laboratory, Reg.-No.: 96970
Applicant	Festool GmbH
Address	Wertstraße 20 73240 Wendlingen GERMANY
Test Specification Standard(s)	47 CFR Part 15 Subpart B ISED ICES-003 Issue 6 ANSI C63.4:2014+A1:2017
Non-Standard Test Method	None
Equipment under Test (EUT):	
Product Description	Vacuum Cleaner
Model(s)	CTC SYS I
Additional Model(s)	None
Brand Name(s)	None
Hardware Version(s)	10268880
Software Version(s)	10491558 index B
FCC-ID	2AL2E-CTCSYS
IC	22501-CTCSYS
Test Result	**PASSED**

Possible test case verdicts:		
required by standard but not tested	N/T	
not required by standard	N/R	
required by standard but not appl. to test object	N/A	
test object does meet the requirement	P(PASS)	
test object does not meet the requirement	F(FAIL)	
Testing:		
Date of receipt of test item	2021-02-18	
Report:		
Compiled by	Stephan Liebich	
Tested by (+ signature) (Responsible for Test)	Stephan Liebich	.....
Approved by (+ signature) (Test Lab Technician)	Matthias Handrik	.....
Date of Issue	2021-05-07	
Total number of pages	32	
General Remarks:		
The test results presented in this report relate only to the object tested. **The results contained in this report reflect the results for this particular model and serial number. It is the responsibility of the manufacturer to ensure that all production models meet the intent of the requirements detailed within this report.** This report shall not be reproduced, except in full, without the written approval of the Issuing testing laboratory.		
Additional Comments:		
None		

ABBREVIATIONS AND ACRONYMS

Acronyms	
Acronym	Description
EUT	Equipment Under Test
FCC	Federal Communications Commission
ISED	Innovation, Science and Economic Development Canada
T_{NOM}	Nominal operating temperature
V_{NOM}	Nominal supply voltage

VERSION HISTORY

Version History			
Version	Issue Date	Remarks	Revised By
01	2021-05-07	Initial Release	--

REPORT INDEX

1 Equipment (Test Item) Under Test 6
1.1 Equipment Ports 7
1.2 Equipment Photos - Internal 8
1.3 Equipment Photos - External 12
1.4 Support Equipment 19
1.5 Operational Modes 19
1.6 EUT Configuration 19
1.7 Sample emission level calculation 20
2 Result Summary 21
2.1 Test Conditions and Results - Radiated emissions acc. to ANSI C63.4 22

1 Equipment (Test Item) Under Test

Description	Vacuum Cleaner	
Model	CTC SYS I	
Additional Model(s)	None	
Brand Name(s)	None	
Serial Number(s)	40020693	
Sample-ID	33411	
Hardware Version(s)	10268880	
Software Version(s)	10491558 index B	
FCC-ID	2AL2E-CTCSYS	
IC	22501-CTCSYS	
Class	Class B	
Equipment type	Table top	
Highest internal frequency [MHz]	2480	
Radio Module	Type	Bluetooth Low Energy (LE)
	Model	nRF52832
	Manufacturer	Nordic Semiconductor
	FCC-ID	None
	IC	None
Supply Voltage	V_{NOM}	2x 18 V DC by external HighPower battery pack
AC/DC-Adaptor	None	
Manufacturer	Festool GmbH Wertstraße 20 73240 Wendlingen GERMANY	

1.1 Equipment Ports

Name	Type	Attributes	Comment
AKKU 1	BAT	Count: 1 Direction: In Service only: No	--
AKKU 2	BAT	Count: 1 Direction: In Service only: No	--
SUCTION HOSE	NE	Count: 1 Direction: In Service only: No	--

Description:	
AC	AC mains power input/output port
DC	DC power input/output port
BAT	DC power input port connected to external battery
IO	Input/Output port
TP	Telecommunication port
NE	Non-electrical port

1.2 Equipment Photos - Internal

OPEN EUT

EUT WITHOUT OUTER COVER

EUT WITHOUT INNER COVER

EUT ENGINE LABEL

EUT PCB WITH CONNECTIONS

EUT PCB TOP SIDE

EUT PCB BOTTOM SIDE

1.3 Equipment Photos - External

EUT WITH AE IN PERSPECTIVE

EUT IN PERSPECTIVE I

EUT IN PERSPECTIVE II

EUT FRONT SIDE

EUT LABEL

EUT LEFT SIDE

BATTERY PACK SLOT

EUT REAR SIDE

EUT RIGHT SIDE

EUT TOP SIDE

AE REMOTE CONTROLER

AE REMOTE CONTROLER LABEL

AE BATTERY PACK

AE BATTERY PACK LABEL

1.4 Support Equipment

Product Type	Device	Manufacturer	Model	Comment
AE	Battery Pack 1	FESTOOL	205034	BP 18 Li 4.0 HPC-ASI
AE	Battery Pack 2	FESTOOL	205034	BP 18 Li 4.0 HPC-ASI
AE	Remote Controller	FESTOOL	10475669	CLEANTEC
Description:				
AE	Auxiliary Equipment			
SIM	Simulator			
MON	Monitoring Equipment			
CBL	Connecting Cable			
Comment: --				

1.5 Operational Modes

Mode #	Description
1	Bluetooth LE TX/RX + EUT operates at full power (EUT is connect with Remote Controller via Bluetooth LE connection and operates at full power.)
Comment: --	

1.6 EUT Configuration

Configuration #	Description
1	Battery Pack 1 and Battery Pack 2 are inserted EUT. EUT is powered by Battery Pack 1 and Battery Pack 2.
Comment: --	

1.7 Sample emission level calculation

The following is a description of terms and a sample calculation, as appears in the radiated emissions data table. The numbers used in the calculation are for example only. There is no direct correlation to the specific data taken for the product described in this document:

Reading:

This is the reading obtained on the spectrum analyser in dBµV. Any external preamplifiers used are taken into account through internal analyser settings.

A.F.:

This is the antenna factor for the receiving antenna. It is a conversion factor, which converts electric fields strengths to voltages, which can be measured directly on the spectrum analyser. It is treated as a loss in dB. Cable losses have been included with the A.F. to simplify the calculations. The antenna factor is used in calculations as follows:

Reading on Analyser (dBµV) + A.F. (dB/m) = Net field strength (dBµV/m)

Net:

This is the net field strength measurement (as shown above).

Limit:

This is the FCC Class B radiated emission limit (in units of dBµV/m). The FCC limits are given in units of µV/m. The following formula is used to convert the units of µV/m to dBµV/m:

Limit (dBµV/m) = 20*log (µV/m)

Margin:

This is the margin of compliance below the FCC limit. The units are given in dB. A negative margin indicates the emission was below the limit. A positive margin indicates that the emission exceeds the limit.

Example only:

Reading + AF	= Net Reading	:	Net reading - FCC limit	= Margin
+21.5 dBµV + 26 dB/m	= 47.5 dBµV/m	:	47.5 dBµV/m - 57.0 dBµV/m	= -9.5 dB

2 Result Summary

FCC 47 CFR Part 15B, ISED ICES-003 Issue 6				
Reference	**Requirement**	**Reference Method**	**Result**	**Remarks**
Emission				
FCC 15.109 ICES-003, 6.2	Radiated emissions	ANSI C63.4:2014 +A1:2017	PASS	--
FCC 15.107 ICES-003, 6.1	AC power line conducted emissions	ANSI C63.4:2014 +A1:2017	N/R	No relevant port
Comment:				

Possible Test Case Verdicts	
PASS	Test object does meet the requirements
FAIL	Test object does not meet the requirements
N/T	Required by standard but not tested
N/R	Not required by standard for the test object

2.1 Test Conditions and Results - Radiated emissions acc. to ANSI C63.4

2.1.1 Information

Test Information	
Reference	FCC 15.109, ICES-003, 6.2
Reference method	ANSI C63.4:2014+A1:2017 Section 8
Equipment class	Class B
Equipment type	Table top
Highest internal frequency [MHz]	2480
Measurement range	30 MHz to 13000 MHz
Temperature [°C]	19 – 24
Humidity [%]	24 – 31
Operator	Stephan Liebich
Date	2021-03-24

2.1.2 Setup

Measurement up to 1 GHz

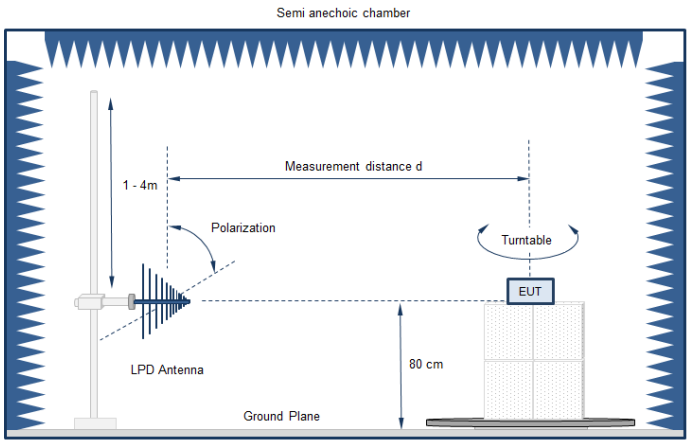

Measurement above 1 GHz

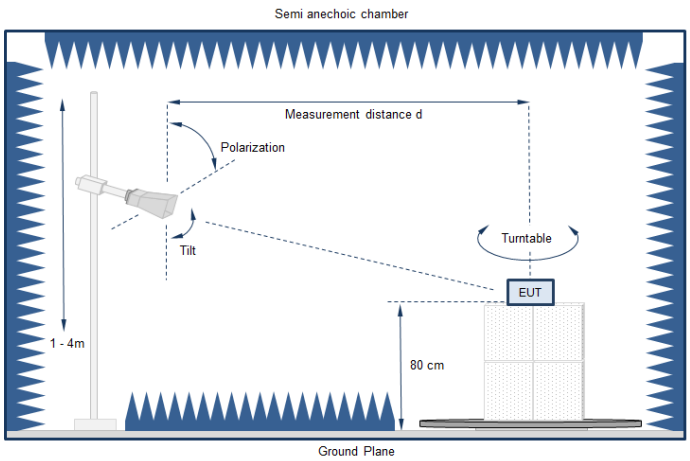

Equipment placement - Table top

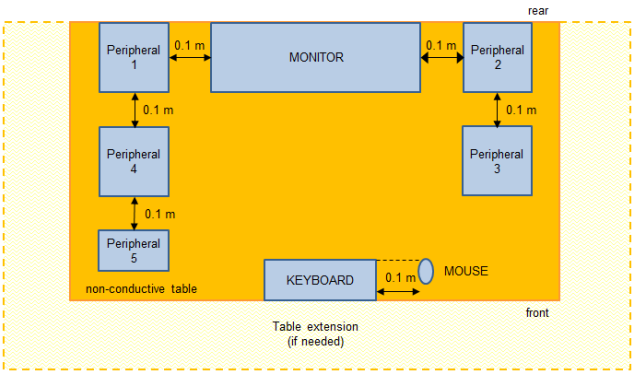

Test Setup

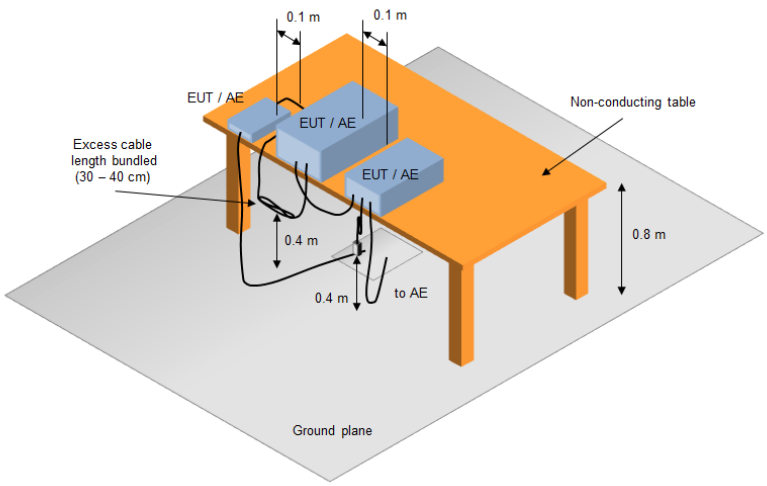

2.1.3 Equipment

Test Software			
Description	Manufacturer	Name	Version
EMC Software	DARE Instruments	Radimation	2020.1.8

Test Equipment					
Description	Manufacturer	Model	Identifier	Cal. Date	Cal. Due
Anechoic chamber	Frankonia	AC1	EF00062	2021-02	2024-02
EMI Test Receiver	Keysight	N9038A-526/WXP	EF01070	2020-06	2021-06
Biconical Antenna	R&S	HK 116	EF00030	2019-04	2022-04
LPD Antenna	R&S	HL 223	EF00187	2019-05	2022-05
Horn Antenna	Schwarzbeck	BBHA9120D	EF00018	2019-10	2022-10
Climatic Sensor	unspecified	unspecified	--	--	--

2.1.4 Procedure

Exploratory measurement
1. The EUT was placed on a non-conductive table at a height of 0.8m. 2. The EUT and support equipment, if needed, were set up to simulate typical usage. 3. Cables, of type and length specified by the manufacturer, were connected to at least one port of each type and were terminated by a device or simulating load of actual usage. 4. The antenna was placed at a distance of 3 or 10 m. 5. The received signal was monitored at the measurement receiver. 6. This procedure has to be performed in both antenna polarizations, horizontal and vertical. 7. The arrangement of the equipment with the maximum emission level is shown on the setup picture at item 1.3

Final measurement
1. The EUT was placed on a 0.8 m non-conductive table at a 3 m distance from the receive antenna. The antenna output was connected to the measurement receiver. 2. A biconical antenna was used for the frequency range 30 – 200 MHz, a logarithmic periodical antenna was used for the frequency range from 200 – 1000 MHz. Above one 1 GHz a Double Ridged Broadband Horn antenna was used. The antenna was placed on an adjustable height antenna mast. 3. The EUT and cable arrangement were based on the exploratory measurement results. 4. Emissions were maximized at each frequency by rotating the EUT and adjusting the receive antenna height and polarization. The maximum values were recorded. 5. The test data of the worst-case conditions were recorded and shown on the next pages.

2.1.5 Limits

Class B @ 3 m		
Frequency [MHz]	Detector	Limit [dBµV/m]
30 - 88	Quasi-peak	40
88 - 216	Quasi-peak	43.5
216 - 960	Quasi-peak	46
960 - 1000	Quasi-peak	54
> 1000	Peak Average	74 54

Class A @ 10 m		
Frequency [MHz]	Detector	Limit [dBµV/m]
30 - 88	Quasi-peak	39
88 - 216	Quasi-peak	43.5
216 - 960	Quasi-peak	46.5
960 - 1000	Quasi-peak	49.5
> 1000	Peak Average	69.5 49.5

2.1.6 Results

Test Results			
Operational mode	EUT Configuration	Verdict	Remark
1	1	PASS	--

2.1.7 Setup Photos

RADIATED EMISSION - 30 MHz to 200 MHz

RADIATED EMISSION - 200 MHz to 1000 MHz

RADIATED EMISSION - 1000 MHz to 13000 MHz

2.1.8 Records

Radiated emissions
according to FCC part 15B

Project Number:	G0M-2007-9184
Applicant:	Festool GmbH
Model Description:	Vacuum Cleaner
Model:	CTC SYS I
Test Sample ID:	33411
Test Site:	Eurofins Product Service GmbH
Operator:	Mr. Liebich
Test Date:	2021-03-24
Operating Conditions:	ambient temperature: 21 °Celsius power input: 2x 18 V DC by external HighPower battery pack
Antenna:	Rohde & Schwarz HK 116, Vertical
Measurement Distance:	3m
Operational Mode &	Mode 1
EUT Configuration:	Configuration 1
Note 1:	--

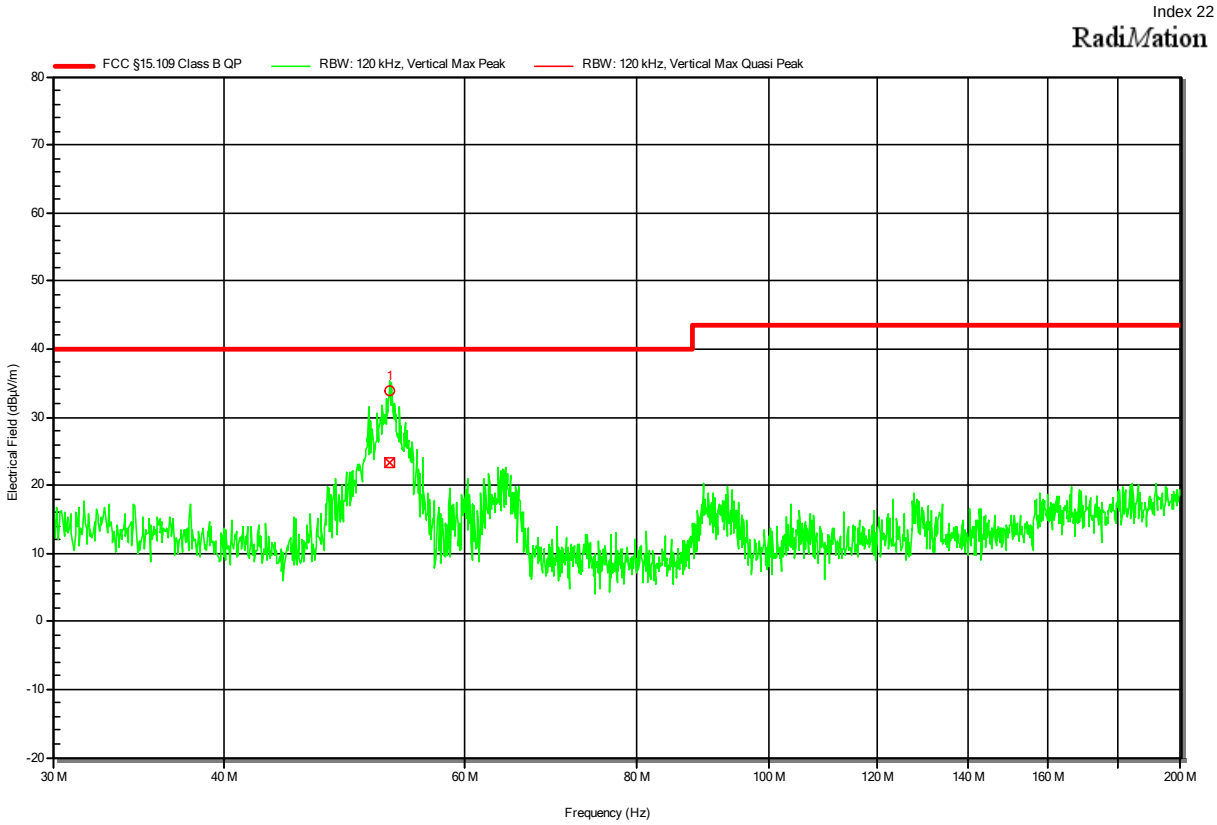

Peak Number	Frequency	Quasi-Peak	Quasi-Peak Limit	Quasi-Peak Difference	Quasi-Peak Status	Angle	Height
1	52.819 MHz	23.41 dBµV/m	40 dBµV/m	-16.59 dB	Pass	72 degrees	1.2 m

Radiated emissions
according to FCC part 15B

Project Number:	G0M-2007-9184
Applicant:	Festool GmbH
Model Description:	Vacuum Cleaner
Model:	CTC SYS I
Test Sample ID:	33411
Test Site:	Eurofins Product Service GmbH
Operator:	Mr. Liebich
Test Date:	2021-03-24
Operating Conditions:	ambient temperature: 21 °Celsius power input: 2x 18 V DC by external HighPower battery pack
Antenna:	Rohde & Schwarz HK 116, Horizontal
Measurement Distance:	3m
Operational Mode & EUT Configuration:	Mode 1 Configuration 1
Note 1:	--

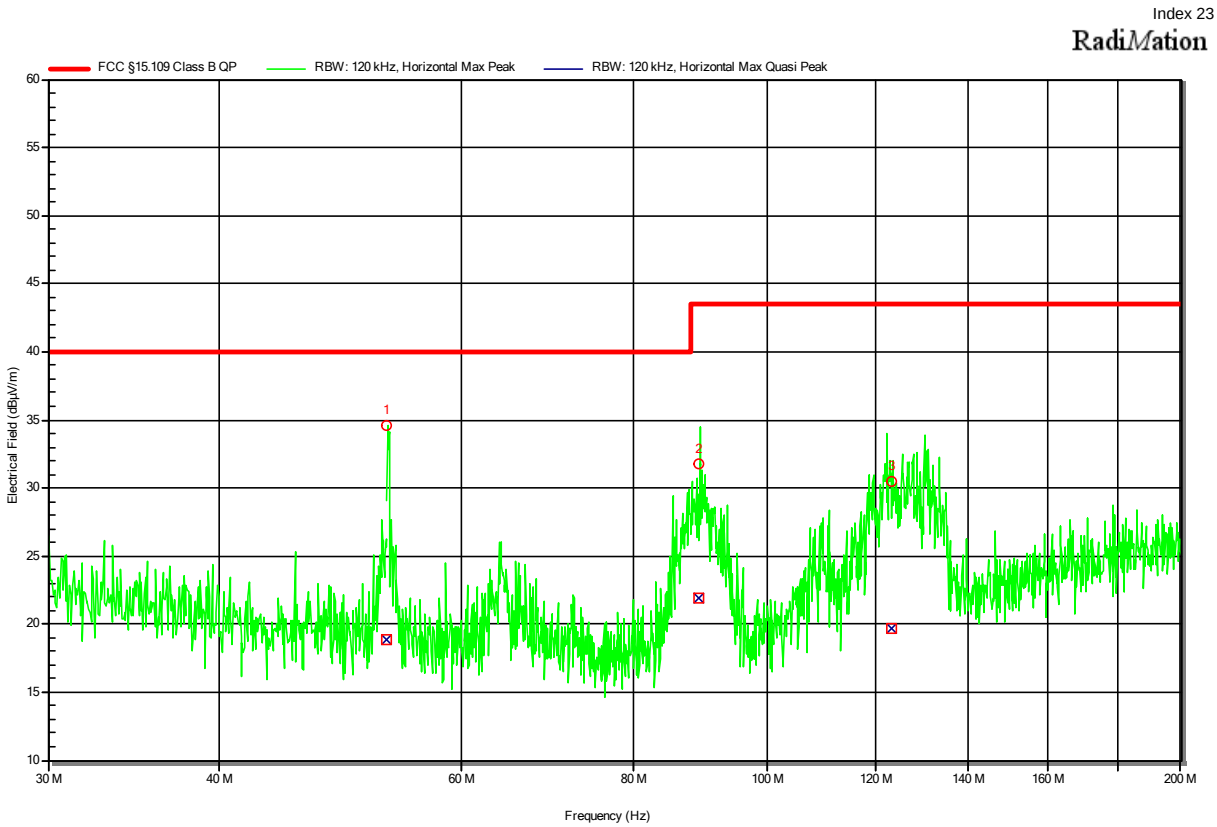

Peak Number	Frequency	Quasi-Peak	Quasi-Peak Limit	Quasi-Peak Difference	Quasi-Peak Status	Angle	Height
1	52.957 MHz	18.86 dBµV/m	40 dBµV/m	-21.14 dB	Pass	0 degrees	2.6 m
2	89.275 MHz	21.92 dBµV/m	43.52 dBµV/m	-21.6 dB	Pass	0 degrees	2.6 m
3	123.065 MHz	19.71 dBµV/m	43.52 dBµV/m	-23.81 dB	Pass	0 degrees	2.6 m

Radiated emissions
according to FCC part 15B

Project Number:	G0M-2007-9184
Applicant:	Festool GmbH
Model Description:	Vacuum Cleaner
Model:	CTC SYS I
Test Sample ID:	33411
Test Site:	Eurofins Product Service GmbH
Operator:	Mr. Liebich
Test Date:	2021-03-24
Operating Conditions:	ambient temperature: 21 °Celsius power input: 2x 18 V DC by external HighPower battery pack
Antenna:	Rohde & Schwarz HL 223, Horizontal
Measurement Distance:	3m
Operational Mode & EUT Configuration:	Mode 1 Configuration 1
Note 1:	--

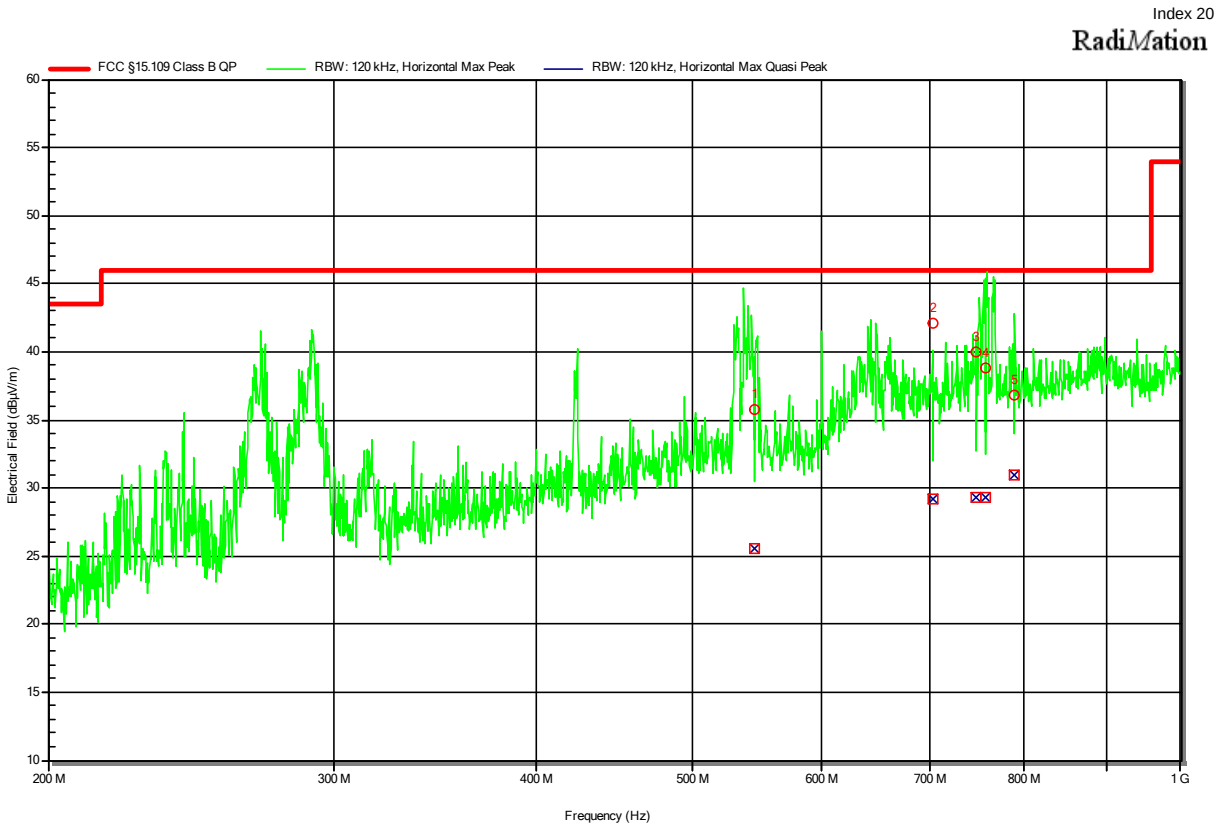

Peak Number	Frequency	Quasi-Peak	Quasi-Peak Limit	Quasi-Peak Difference	Quasi-Peak Status	Angle	Height
1	545.782 MHz	25.61 dBµV/m	46.02 dBµV/m	-20.41 dB	Pass	110 degrees	1.3 m
2	703.573 MHz	29.2 dBµV/m	46.02 dBµV/m	-16.82 dB	Pass	110 degrees	1.3 m
3	748.304 MHz	29.33 dBµV/m	46.02 dBµV/m	-16.69 dB	Pass	110 degrees	1.3 m
4	757.514 MHz	29.37 dBµV/m	46.02 dBµV/m	-16.65 dB	Pass	110 degrees	1.3 m
5	788.94 MHz	30.99 dBµV/m	46.02 dBµV/m	-15.03 dB	Pass	110 degrees	1.3 m

Radiated emissions
according to FCC part 15B

Project Number:	G0M-2007-9184
Applicant:	Festool GmbH
Model Description:	Vacuum Cleaner
Model:	CTC SYS I
Test Sample ID:	33411
Test Site:	Eurofins Product Service GmbH
Operator:	Mr. Liebich
Test Date:	2021-03-24
Operating Conditions:	ambient temperature: 21 °Celsius power input: 2x 18 V DC by external HighPower battery pack
Antenna:	Rohde & Schwarz HL 223, Vertical
Measurement Distance:	3m
Operational Mode & EUT Configuration:	Mode 1 Configuration 1
Note 1:	--

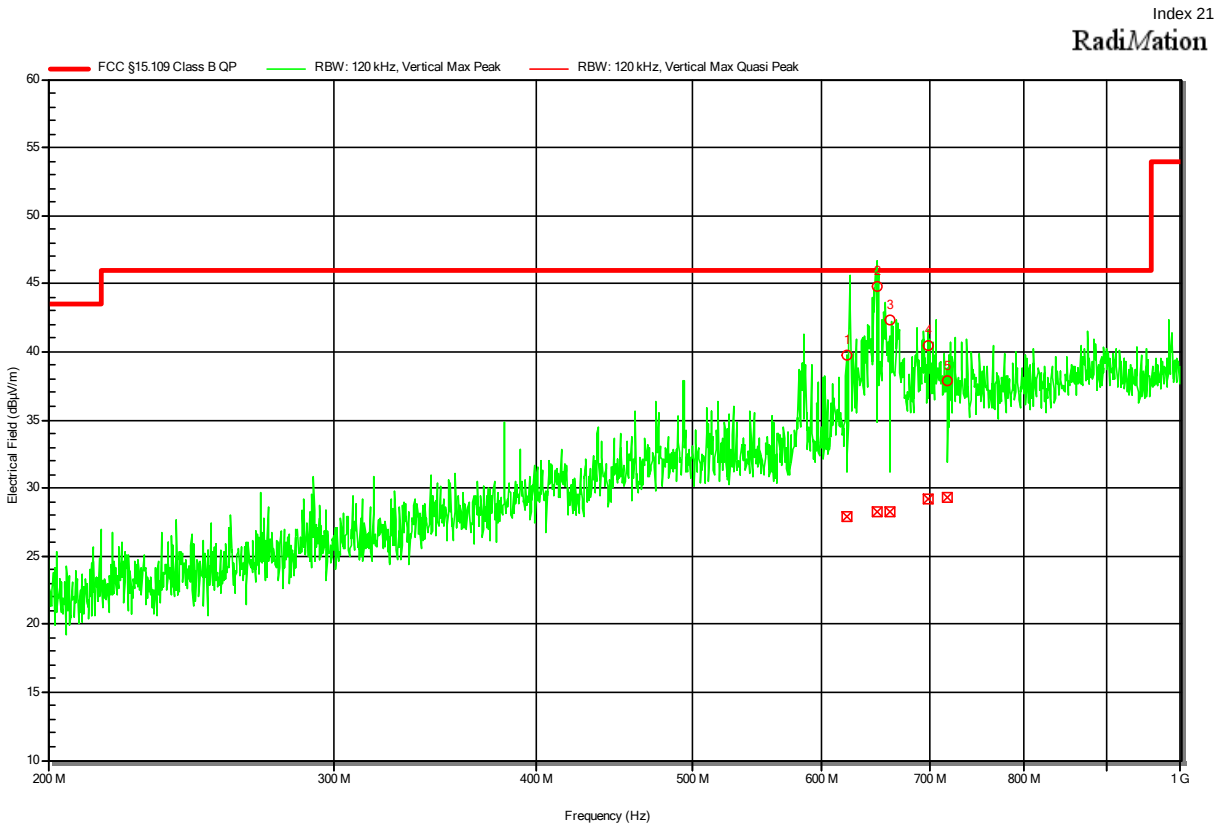

Peak Number	Frequency	Quasi-Peak	Quasi-Peak Limit	Quasi-Peak Difference	Quasi-Peak Status	Angle	Height
1	622.432 MHz	27.95 dBµV/m	46.02 dBµV/m	-18.07 dB	Pass	0 degrees	1 m
2	649.619 MHz	28.29 dBµV/m	46.02 dBµV/m	-17.73 dB	Pass	0 degrees	1 m
3	661.423 MHz	28.28 dBµV/m	46.02 dBµV/m	-17.74 dB	Pass	0 degrees	1 m
4	697.772 MHz	29.16 dBµV/m	46.02 dBµV/m	-16.86 dB	Pass	0 degrees	1 m
5	718.505 MHz	29.35 dBµV/m	46.02 dBµV/m	-16.67 dB	Pass	0 degrees	1 m

Radiated emissions
according to FCC part 15B

Project Number:	G0M-2007-9184
Applicant:	Festool GmbH
Model Description:	Vacuum Cleaner
Model:	CTC SYS I
Test Sample ID:	33411
Test Site:	Eurofins Product Service GmbH
Operator:	Mr. Liebich
Test Date:	2021-03-24
Operating Conditions:	ambient temperature: 21 °Celsius power input: 2x 18 V DC by external HighPower battery pack
Antenna:	Schwarzbeck BBHA 9120D, Vertical
Measurement Distance:	3m
Operational Mode &	Mode 1
EUT Configuration:	Configuration 1
Note 1:	--

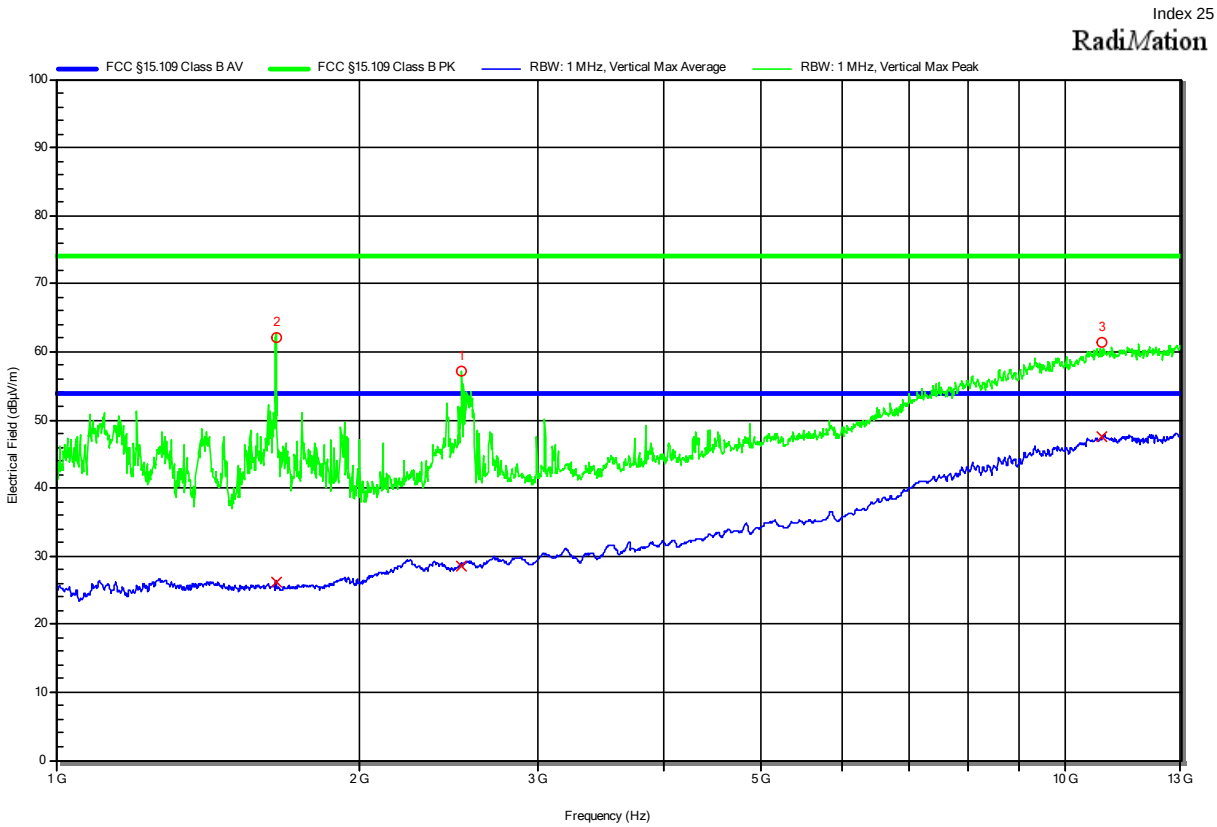

Peak Number	Frequency	Peak	Peak Limit	Peak Difference	Peak Status	Angle	Height
1	2.525 GHz	57.17 dBµV/m	73.98 dBµV/m	-16.81 dB	Pass	0 degrees	1 m
2	1.651 GHz	62.07 dBµV/m	73.98 dBµV/m	-11.91 dB	Pass	0 degrees	1 m
3	10.88 GHz	61.37 dBµV/m	73.98 dBµV/m	-12.61 dB	Pass	0 degrees	1 m

Peak Number	Frequency	Average	Average Limit	Average Difference	Average Status	Angle	Height
1	2.525 GHz	28.58 dBµV/m	53.98 dBµV/m	-25.4 dB	Pass	0 degrees	1 m
2	1.651 GHz	26.29 dBµV/m	53.98 dBµV/m	-27.69 dB	Pass	0 degrees	1 m
3	10.88 GHz	47.64 dBµV/m	53.98 dBµV/m	-6.34 dB	Pass	0 degrees	1 m

Radiated emissions
according to FCC part 15B

Project Number:	G0M-2007-9184
Applicant:	Festool GmbH
Model Description:	Vacuum Cleaner
Model:	CTC SYS I
Test Sample ID:	33411
Test Site:	Eurofins Product Service GmbH
Operator:	Mr. Liebich
Test Date:	2021-03-24
Operating Conditions:	ambient temperature: 21 °Celsius power input: 2x 18 V DC by external HighPower battery pack
Antenna:	Schwarzbeck BBHA 9120D, Horizontal
Measurement Distance:	3m
Operational Mode & EUT Configuration:	Mode 1 Configuration 1
Note 1:	--

Index 26

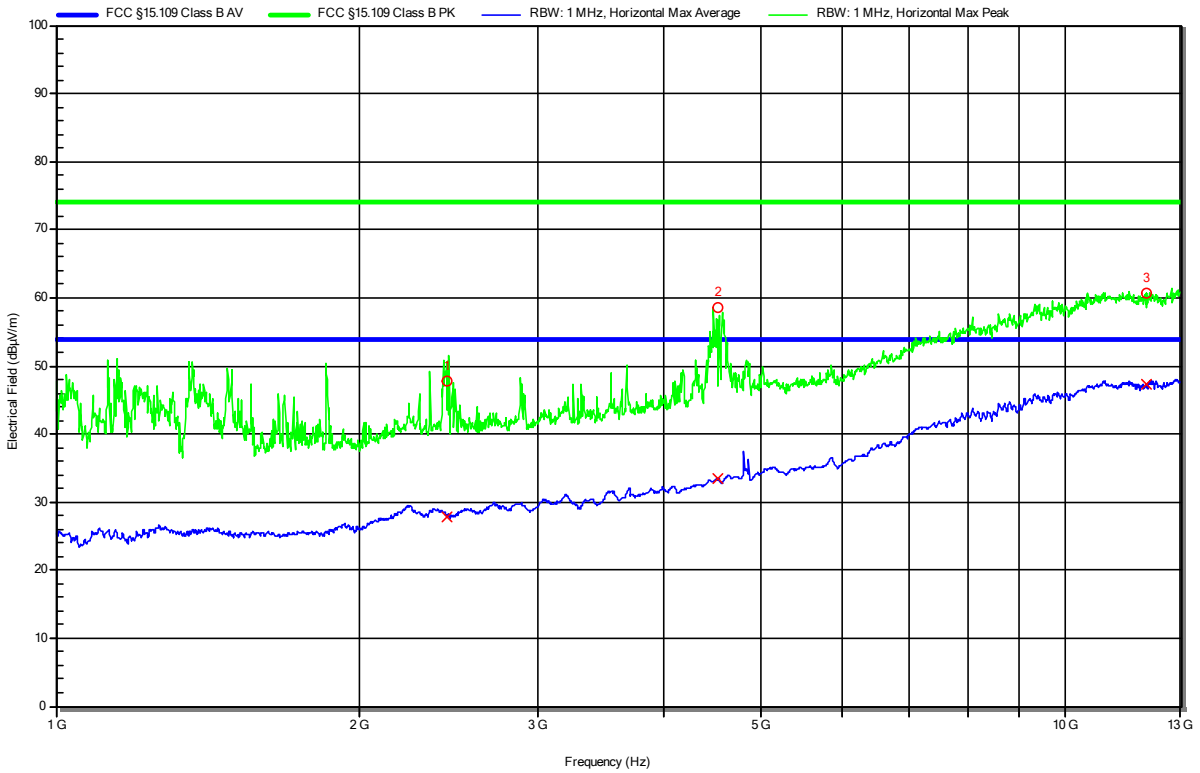

Peak Number	Frequency	Peak	Peak Limit	Peak Difference	Peak Status	Angle	Height
1	2.438 GHz	47.76 dBµV/m	73.98 dBµV/m	-26.22 dB	Pass	0 degrees	1 m
2	4.528 GHz	58.46 dBµV/m	73.98 dBµV/m	-15.52 dB	Pass	0 degrees	1 m
3	12.015 GHz	60.7 dBµV/m	73.98 dBµV/m	-13.27 dB	Pass	0 degrees	1 m

Peak Number	Frequency	Average	Average Limit	Average Difference	Average Status	Angle	Height
1	2.438 GHz	27.78 dBµV/m	53.98 dBµV/m	-26.2 dB	Pass	0 degrees	1 m
2	4.528 GHz	33.51 dBµV/m	53.98 dBµV/m	-20.47 dB	Pass	0 degrees	1 m
3	12.015 GHz	47.19 dBµV/m	53.98 dBµV/m	-6.78 dB	Pass	0 degrees	1 m