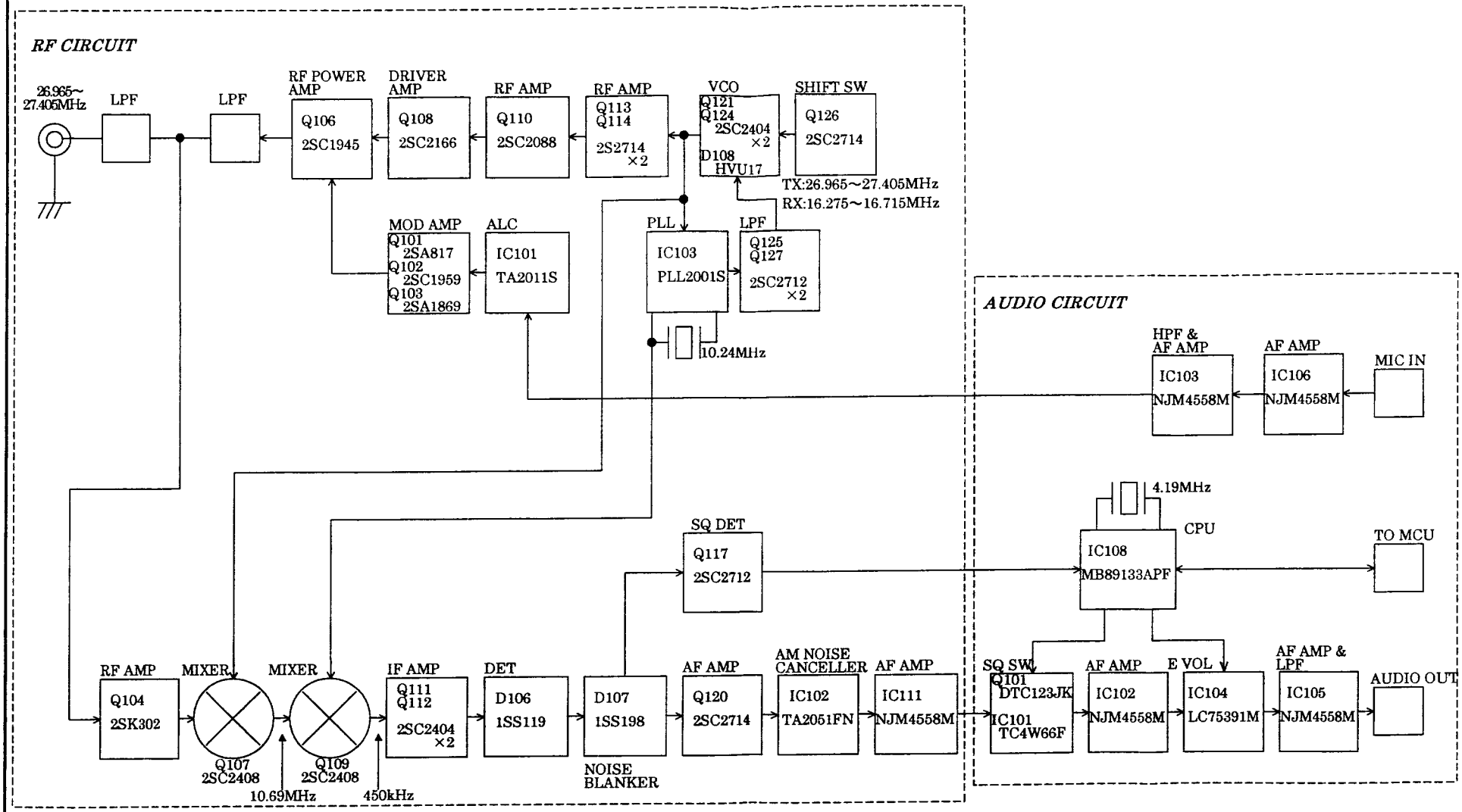

SYM	DATE	DSGN	REVISION	APPR

DWG		98 9.16	
DSGN		98 9.16	
CHK		98 9.16	
APPR		98 9.16	

CAL WT(g) | MATERIAL | NAME: BLOCK DIAGRAM

ACT WT(g) | FINISH | DWG NO. JC-215R-BA

MODEL: JC-215R | DATE: 980916 | SCALE: FREE | UNIT: MM | TOL

Clarion Co.,Ltd.

FCC ID: AX292AJC215R
Marstech Report No. 98389D
EXHIBIT B(1)-1