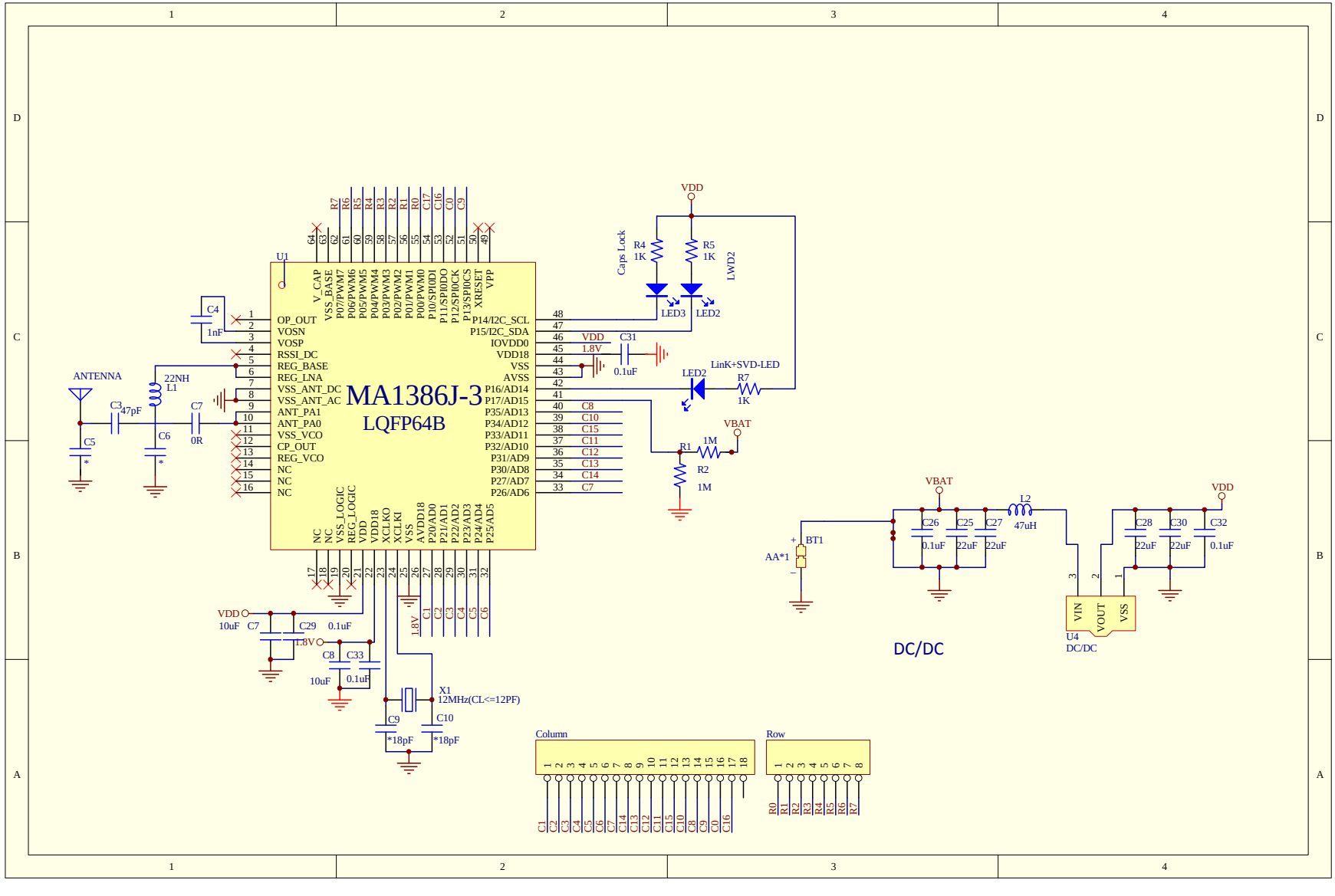
MA1386J-3
LQFP64B
U1
V_CAP
VSS_BASE
P07/PWM7
P06/PWM6
P05/PWM5
P04/PWM4
P03/PWM3
P02/PWM2
P01/PWM1
P00/PWM0
P10/SPI0DI
P11/SPI0DO
P12/SPI0CK
P13/SPI0CS
XRESET
VPP
OP_OUT
VOSN
VOSP
RSSI_DC
REG_BASE
REG_LNA
VSS_ANT_DC
VSS_ANT_AC
ANT_PA1
ANT_PA0
VSS_VCO
CP_OUT
REG_VCO
NC
P14/I2C_SCL
P15/I2C_SDA
IOVDD0
VDD18
VSS
AVSS
P16/AD14
P17/AD15
P35/AD13
P34/AD12
P33/AD11
P32/AD10
P31/AD9
P30/AD8
P27/AD7
P26/AD6
VSS_LOGIC
REG_LOGIC
VDD
XCLKO
XCLKI
AVDD18
P20/AD0
P21/AD1
P22/AD2
P23/AD3
P24/AD4
P25/AD5
ANTENNA
C3
47pF
22NH
L1
C7
0R
C4
1nF
C5
C6
VDD
10uF
C29
0.1uF
1.8V
C8
C33
10uF
0.1uF
X1
12MHz(CL<=12PF)
C9
*18pF
C10
*18pF
Caps Lock
R4
1K
R5
1K
LWD2
LED3
LED2
C31
0.1uF
LinK+SVD-LED
R7
1K
VBAT
R1
1M
R2
1M
BT1
AA*1
C26
0.1uF
C25
22uF
C27
22uF
L2
47uH
C28
22uF
C30
22uF
C32
0.1uF
VIN
VOUT
VSS
U4
DC/DC
DC/DC
Column
Row