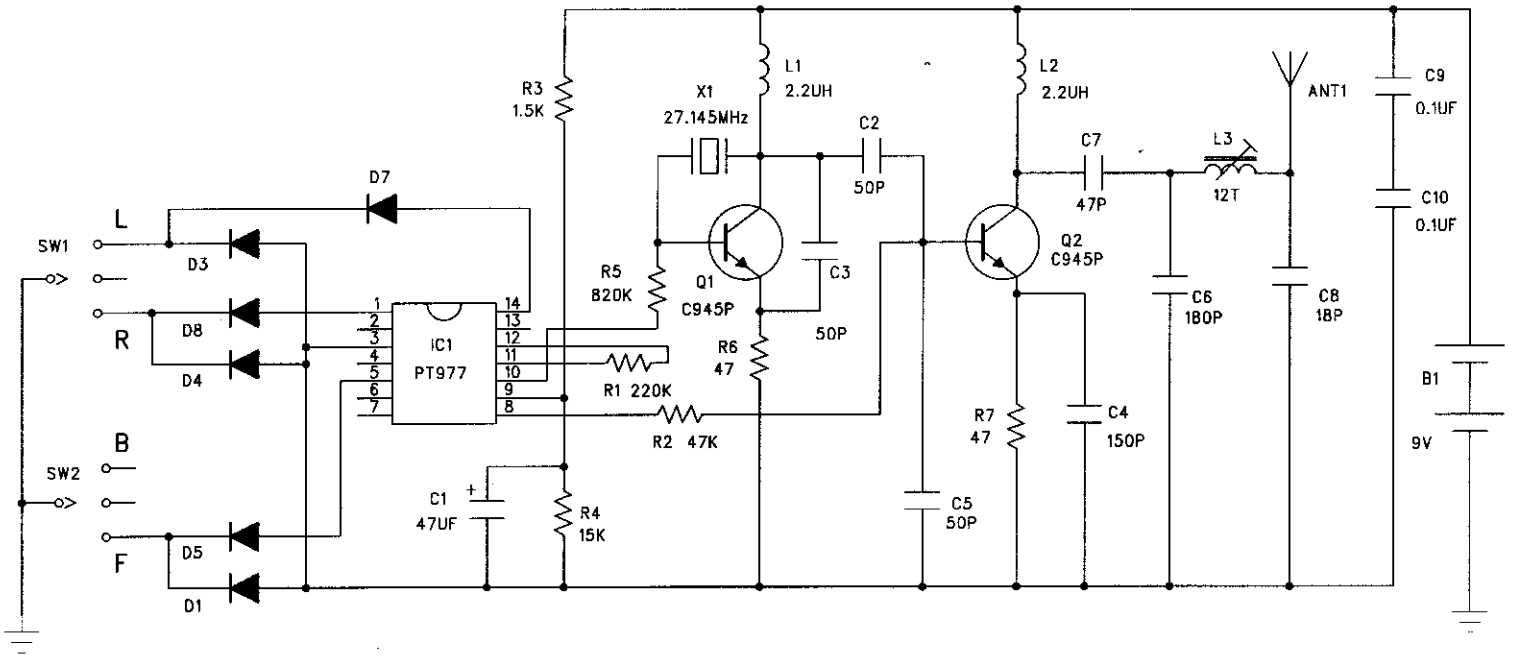

NOTE:ALL RESISTANCE VALUES ARE IN "ohm"
ALL CAPACITANCE VALUES ARE IN "UF"

* MYLAR

		ECHO TOYS LTD	
		MODEL	90333T-27
		DWG NO	
DESIGNER		DATE	23 JULY 2001