FCC CFR47 PART 22 SUBPART H
FCC CFR47 PART 24 SUBPART E
FCC CFR47 PART 27 SUBPART F
FCC CFR47 PART 27 SUBPART D
FCC CFR47 PART 27 SUBPART H
FCC CFR47 PART 27 SUBPART L

C2PC CERTIFICATION TEST REPORT

FOR

GSM/WCDMA/LTE PHABLET + BLUETOOTH, DTS/UNII a/b/g/n & NFC

MODEL NUMBER: LG-H740, LGH740, H740

FCC ID: ZNFH740

REPORT NUMBER: 15I21442-E1V2

ISSUE DATE: SEP 16, 2015

Prepared for
LG ELECTRONICS MOBILECOMM U.S.A., INC
1000 SYLVAN AVENUE
ENGLEWOOD CLIFFS,
NEW JERSEY, 07632, U.S.A

Prepared by
UL VERIFICATION SERVICES
47173 BENICIA STREET
FREMONT, CA 94538, U.S.A.
TEL: (510) 771-1000
FAX: (510) 661-0888

Revision History

Rev.	Issue Date	Revisions	Revised By
V1	8/31/15	Initial Issue	Dan. C
V2	9/16/15	Update page 136	Peng. Z

UL VERIFICATION SERVICES INC. FORM NO: CCSUP4701H
47173 BENICIA STREET, FREMONT, CA 94538, USA TEL: (510) 771-1000 FAX: (510) 661-0888

This report shall not be reproduced except in full, without the written approval of UL Verification Services Inc.

TABLE OF CONTENTS

1. ATTESTATION OF TEST RESULTS 5
2. TEST METHODOLOGY 6
3. FACILITIES AND ACCREDITATION 6
4. CALIBRATION AND UNCERTAINTY 6
4.1. MEASURING INSTRUMENT CALIBRATION 6
4.2. SAMPLE CALCULATION 6
4.3. MEASUREMENT UNCERTAINTY 7
5. EQUIPMENT UNDER TEST 8
5.1. DESCRIPTION OF EUT 8
5.2. MAXIMUM OUTPUT POWER 9
5.3. MAXIMUM OUTPUT POWER (LTE) 10
5.4. DESCRIPTION OF AVAILABLE ANTENNAS 13
5.5. DESCRIPTION OF TEST SETUP 14
6. TEST AND MEASUREMENT EQUIPMENT 17
7. SUMMARY TABLE 18
8. RF POWER OUTPUT VERIFICATION 19
8.1. GSM/GPRS/EDGE 19
8.1.1. GSM OUTPUT POWER RESULT 20
8.2. UMTS REL 99 21
8.2.1. UMTS REL 99 OUTPUT POWER RESULT 21
8.3. UMTS HSDPA 22
8.3.1. UMTS HSDPA OUTPUT POWER RESULT 23
8.3.2. UMTS HSUPA 24
8.3.3. UMTS HSUPA OUTPUT POWER RESULT 25
8.4. LTE OUTPUT VERIFICATION 26
8.4.1. LTE OUTPUT RESULT 26
9. RADIATED TEST RESULTS 37
9.1. RADIATED POWER (ERP & EIRP) 37
9.1.1. ERP/EIRP Results 38
9.1.2. ERP/EIRP PLOTS 47
9.2. FIELD STRENGTH OF SPURIOUS RADIATION 103
9.2.1. SPURIOUS RADIATION PLOTS 104

UL VERIFICATION SERVICES INC. FORM NO: CCSUP4701H
47173 BENICIA STREET, FREMONT, CA 94538, USA TEL: (510) 771-1000 FAX: (510) 661-0888

This report shall not be reproduced except in full, without the written approval of UL Verification Services Inc.

10. SETUP PHOTOS 160

UL VERIFICATION SERVICES INC. FORM NO: CCSUP4701H
47173 BENICIA STREET, FREMONT, CA 94538, USA TEL: (510) 771-1000 FAX: (510) 661-0888

This report shall not be reproduced except in full, without the written approval of UL Verification Services Inc.

1. ATTESTATION OF TEST RESULTS

COMPANY NAME:	LG ELECTRONICS MOBILECOMM U.S.A., INC.
EUT DESCRIPTION:	GSM/WCDMA/LTE PHABLET + BLUETOOTH, DTS/UNII a/b/g/n & NFC
MODEL:	LG-H740, LGH740, H740
SERIAL NUMBER:	506CYFT000411 (RADIATED)
DATE TESTED:	AUGUST 3-10, 2015

APPLICABLE STANDARDS	
STANDARD	**TEST RESULTS**
FCC PART 22H, 24E, 27D, 27H, 27F, 27L	PASS

UL Verification Services Inc. tested the above equipment in accordance with the requirements set forth in the above standards. All indications of Pass/Fail in this report are opinions expressed by UL Verification Services Inc. based on interpretations and/or observations of test results. Measurement Uncertainties were not taken into account and are published for informational purposes only. The test results show that the equipment tested is capable of demonstrating compliance with the requirements as documented in this report.

Note: The results documented in this report apply only to the tested sample, under the conditions and modes of operation as described herein. This document may not be altered or revised in any way unless done so by UL Verification Services Inc. and all revisions are duly noted in the revisions section. Any alteration of this document not carried out by UL Verification Services Inc. will constitute fraud and shall nullify the document. This report must not be used by the client to claim product certification, approval, or endorsement by NVLAP, NIST, any agency of the Federal Government, or any agency of any government.

Approved & Released For
UL Verification Services Inc. By:

DAN CORONIA
CONSUMER TECHNOLOGY DIVISION
WiSE PROJECT LEAD
UL Verification Services Inc.

Tested By:

KIYA KEDIDA
CONSUMER TECHNOLOGY DIVISION
WiSE LAB ENGINEER
UL Verification Services Inc.

This report shall not be reproduced except in full, without the written approval of UL Verification Services Inc.

2. TEST METHODOLOGY

The tests documented in this report were performed in accordance with TIA-603-C, FCC CFR 47 Part 22, FCC CFR Part 24, and FCC CFR 47 Part 27.

3. FACILITIES AND ACCREDITATION

The test sites and measurement facilities used to collect data are located at 47173 and 47266 Benicia Street, Fremont, California, USA. Line conducted emissions are measured only at the 47173 address. The following table identifies which facilities were utilized for radiated emission measurements documented in this report. Specific facilities are also identified in the test results sections.

47173 Benicia Street	47266 Benicia Street
☒ Chamber A(IC: 2324B-1)	☐ Chamber D(IC: 2324B-4)
☒ Chamber B(IC: 2324B-2)	☐ Chamber E(IC: 2324B-5)
☒ Chamber C(IC: 2324B-3)	☐ Chamber F(IC: 2324B-6)
	☐ Chamber G(IC: 2324B-7)
	☐ Chamber H(IC: 2324B-8)

UL Verification Services Inc. is accredited by NVLAP, Laboratory Code 200065-0. The full scope of accreditation can be viewed at http://ts.nist.gov/standards/scopes/2000650.htm.

4. CALIBRATION AND UNCERTAINTY

4.1. MEASURING INSTRUMENT CALIBRATION

The measuring equipment utilized to perform the tests documented in this report has been calibrated in accordance with the manufacturer's recommendations, and is traceable to recognized national standards

4.2. SAMPLE CALCULATION

Where relevant, the following sample calculation is provided:

EIRP = PSA reading with EUT worst orientation (dBm) + Path loss (dB) – cable loss(between the SG and substitution antenna) + Substitution Antenna Factor (dBi)

ERP = PSA reading with EUT worst orientation (dBm) + Path loss (dB) – cable loss(between the SG and substitution antenna)

(Path loss = Signal generator output – PSA reading with substitution antenna)

This report shall not be reproduced except in full, without the written approval of UL Verification Services Inc.

4.3. MEASUREMENT UNCERTAINTY

Where relevant, the following measurement uncertainty levels have been estimated for tests performed on the apparatus:

PARAMETER	UNCERTAINTY
Conducted Disturbance, 0.15 to 30 MHz	3.52 dB
Radiated Disturbance, 30 to 1000 MHz	4.94 dB
Radiated Disturbance, 1GHz to 40GHz	4.94 dB

Uncertainty figures are valid to a confidence level of 95%.

This report shall not be reproduced except in full, without the written approval of UL Verification Services Inc.

5. EQUIPMENT UNDER TEST

5.1. DESCRIPTION OF EUT

This EUT is a GSM/WCDMA/LTE PHABLET + BLUETOOTH, DTS/UNII a/b/g/n & NFC.

UL VERIFICATION SERVICES INC. FORM NO: CCSUP4701H
47173 BENICIA STREET, FREMONT, CA 94538, USA TEL: (510) 771-1000 FAX: (510) 661-0888

This report shall not be reproduced except in full, without the written approval of UL Verification Services Inc.

5.2. MAXIMUM OUTPUT POWER

The transmitter has a maximum peak conducted and radiated ERP / EIRP output powers as follows:

FCC Part 22/24						
Band	Frequency Range(MHz)	Modulation	Conducted		Radiated	
			AVG(dBm)	AVG(mW)	AVG(dBm)	AVG(mW)
GSM850	824~849	GMSK	33.0	1995.26		
	824~849	GPRS	33.1	2041.74	27.20	524.81
	824~849	EGPRS	27.5	562.34	24.00	251.19
GSM1900	1850~1910	GMSK	29.6	912.01		
	1850~1910	GPRS	29.6	912.01	30.72	1180.32
	1850~1910	EGPRS	25.6	363.08	28.40	691.83
Band 5	824~849	REL99	24.2	263.03	19.15	82.22
	824~849	HSDPA	24.2	263.03	18.95	78.52
	824~849	HSUPA	23.7	234.42		
Band 2	1850~1910	REL99	24.1	257.04	24.92	310.46
	1850~1910	HSDPA	24.1	257.04	24.99	315.50
	1850~1910	HSUPA	23.4	218.78		

UL VERIFICATION SERVICES INC. FORM NO: CCSUP4701H
47173 BENICIA STREET, FREMONT, CA 94538, USA TEL: (510) 771-1000 FAX: (510) 661-0888
This report shall not be reproduced except in full, without the written approval of UL Verification Services Inc.

5.3. MAXIMUM OUTPUT POWER (LTE)

LTE Band 2

The transmitter has a maximum peak conducted and radiated ERP/EIRP output powers as follows:

FCC Part 24							
Band	Frequency Range(MHz)	BandWidth (MHz)	Modulation	Conducted		Radiated	
				AVG(dBm)	AVG(mW)	AVG(dBm)	AVG(mW)
LTE2	1850~1910	20MHz	QPSK	24.66	292.42	28.51	709.58
			16QAM	23.70	234.42	27.51	563.64
		15MHz	QPSK	24.70	295.12	27.61	576.77
			16QAM	23.70	234.42	26.61	458.14
		10MHz	QPSK	24.69	294.44	27.51	563.64
			16QAM	23.70	234.42	26.51	447.71
		5MHz	QPSK	24.70	295.12	28.91	778.04
			16QAM	23.40	218.78	27.91	618.02
		3MHz	QPSK	24.65	291.74	28.01	632.41
			16QAM	23.53	225.42	27.11	514.04
		1.4MHz	QPSK	24.70	295.12	28.01	632.41
			16QAM	23.70	234.42	27.15	518.80

UL VERIFICATION SERVICES INC. FORM NO: CCSUP4701H
47173 BENICIA STREET, FREMONT, CA 94538, USA TEL: (510) 771-1000 FAX: (510) 661-0888

This report shall not be reproduced except in full, without the written approval of UL Verification Services Inc.

LTE Band 4

FCC Part 27							
Band	Frequency Range(MHz)	BandWidth (MHz)	Modulation	Conducted		Radiated	
				AVG(dBm)	AVG(mW)	AVG(dBm)	AVG(mW)
LTE4	1710~1755	20MHz	QPSK	24.69	294.44	26.57	453.94
			16QAM	23.38	217.77	25.22	332.66
		15MHz	QPSK	24.56	285.76	26.87	486.41
			16QAM	23.70	234.42	26.04	401.79
		10MHz	QPSK	24.70	295.12	26.71	468.81
			16QAM	23.70	234.42	26.03	400.87
		5MHz	QPSK	24.55	285.10	26.85	484.17
			16QAM	23.43	220.29	25.10	323.59
		3MHz	QPSK	24.68	293.76	26.32	428.55
			16QAM	23.70	234.42	24.81	302.69
		1.4MHz	QPSK	24.58	287.08	26.66	463.45
			16QAM	23.55	226.46	25.04	319.15

LTE Band 5

FCC Part 22							
Band	Frequency Range(MHz)	BandWidth (MHz)	Modulation	Conducted		Radiated	
				AVG(dBm)	AVG(mW)	AVG(dBm)	AVG(mW)
LTE5	824~849	10MHz	QPSK	24.60	288.40	21.0	125.89
			16QAM	23.70	234.42	20.13	103.04
		5MHz	QPSK	24.59	287.74	20.9	123.03
			16QAM	23.31	214.29	19.93	98.40
		3MHz	QPSK	24.66	292.42	20.9	123.03
			16QAM	23.49	223.36	19.93	98.40
		1.4MHz	QPSK	24.69	294.44	21.0	125.89
			16QAM	23.49	223.36	19.93	98.40

UL VERIFICATION SERVICES INC. FORM NO: CCSUP4701H
47173 BENICIA STREET, FREMONT, CA 94538, USA TEL: (510) 771-1000 FAX: (510) 661-0888
This report shall not be reproduced except in full, without the written approval of UL Verification Services Inc.

LTE Band 12

FCC Part 27							
Band	Frequency Range(MHz)	BandWidth (MHz)	Modulation	Conducted		Radiated	
				AVG(dBm)	AVG(mW)	AVG(dBm)	AVG(mW)
LTE12	699~716	10MHz	QPSK	24.70	295.12	21.2	131.83
			16QAM	23.56	226.99	20.1	102.33
		5MHz	QPSK	24.70	295.12	21.0	125.89
			16QAM	23.70	234.42	21.1	128.82
		3MHz	QPSK	24.60	288.40	21.2	131.83
			16QAM	23.59	228.56	20.3	107.15
		1.4MHz	QPSK	24.61	289.07	21.2	131.83
			16QAM	23.26	211.84	20.2	104.71

LTE Band 17

Measured Results

LTE Band 17 is covered by LTE Band 12 due to similar frequency range, same maximum tune-up limit and same channel bandwidth.

LTE Band 30

FCC Part 27							
Band	Frequency Range(MHz)	BandWidth (MHz)	Modulation	Conducted		Radiated	
				AVG(dBm)	AVG(mW)	AVG(dBm)	AVG(mW)
LTE30	2305~2315	10MHz	QPSK	22.60	181.97	20.9	123.03
			16QAM	21.70	147.91	20.01	100.23
		5MHz	QPSK	22.70	186.21	20.94	124.17
			16QAM	21.43	139.00	19.93	98.40

UL VERIFICATION SERVICES INC. FORM NO: CCSUP4701H
47173 BENICIA STREET, FREMONT, CA 94538, USA TEL: (510) 771-1000 FAX: (510) 661-0888
This report shall not be reproduced except in full, without the written approval of UL Verification Services Inc.

5.4. DESCRIPTION OF AVAILABLE ANTENNAS

The radio utilizes a PIFA antenna for the [List the bands supported] with a maximum peak gain as follow:

Frequency (MHz)	Peak Gain (dBi)
GSM850, 824~849MHz	-11.2
GSM1900, 1850~1910MHz	-5.0
Band 5, 824~849MHz	-11.2
Band 2, 1850~1910MHz	-5.0
LTE2, 1850~1910MHz	-5.0
LTE4, 1710~1755MHz	-4.6
LTE5, 824~849MHz	-11.2
LTE12, 699~716MHz	-3.6
LTE 17, 704~716MHz	-3.6
LTE 30, 2305~2315MHz	-3.5

This report shall not be reproduced except in full, without the written approval of UL Verification Services Inc.

5.5. DESCRIPTION OF TEST SETUP

SUPPORT EQUIPMENT

Support Equipment List				
Description	Manufacturer	Model	Serial Number	FCC ID
AC Adapter	LG	MCS-N04WS	SA560000030	N/A
Earphone	LG	-	-	N/A

I/O CABLES (CONDUCTED SETUP)

I/O Cable List						
Cable No	Port	# of identical ports	Connector Type	Cable Type	Cable Length (m)	Remarks
1	RF Out	1	Spectrum Analyzer	Shielded	None	NA
2	Antenna Port	1	EUT	Shielded	0.1m	NA
3	RF In/Out	1	Communication Test Set	Shielded	1m	NA

I/O CABLES (RADIATED SETUP)

I/O CABLE LIST						
Cable No.	Port	# of Identical Ports	Connector Type	Cable Type	Cable Length	Remarks
1	USB	1	AC Adapter	Un-shielded	1.2m	NA
2	Jack	1	Headset	Shielded	1m	NA
3	RF In/out	1	Communication Test Set	Un-shielded	2m	NA

TEST SETUP

The EUT is continuously communicated to the call box during the tests.

This report shall not be reproduced except in full, without the written approval of UL Verification Services Inc.

SETUP DIAGRAM FOR TESTS (CONDUCTED TEST SETUP)

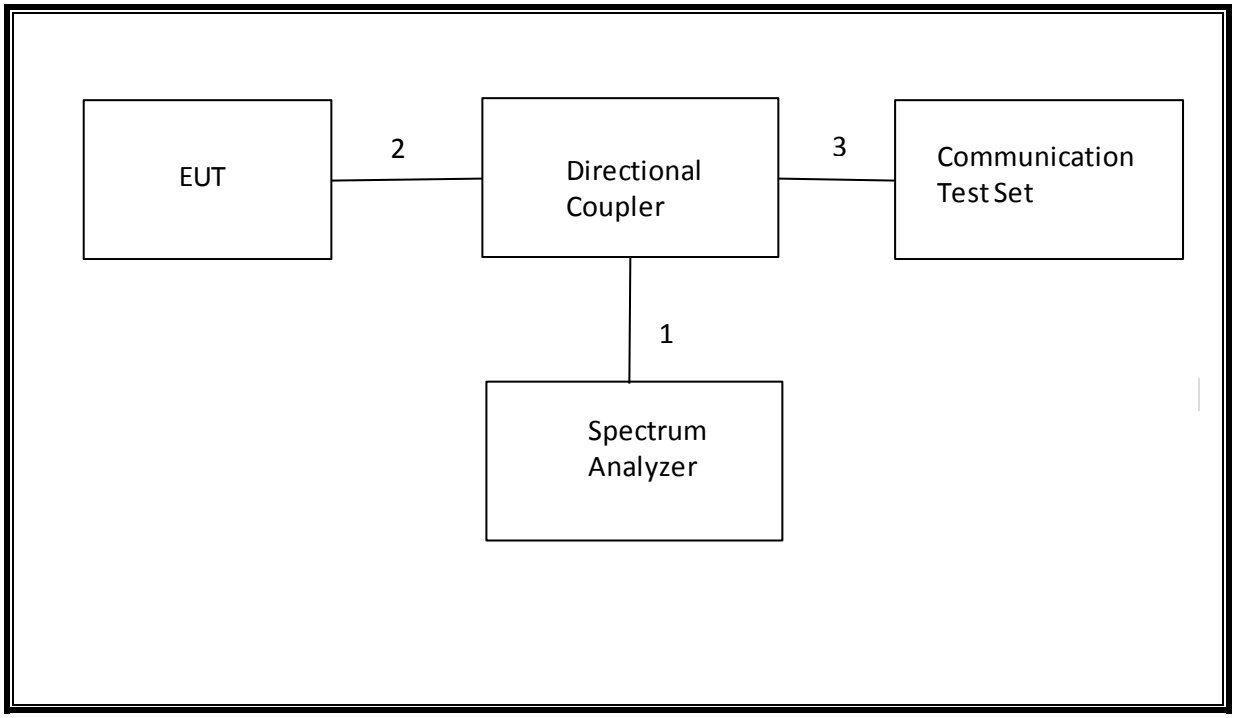

This report shall not be reproduced except in full, without the written approval of UL Verification Services Inc.

SETUP DIAGRAM FOR TESTS (RADIATED TEST SETUP)

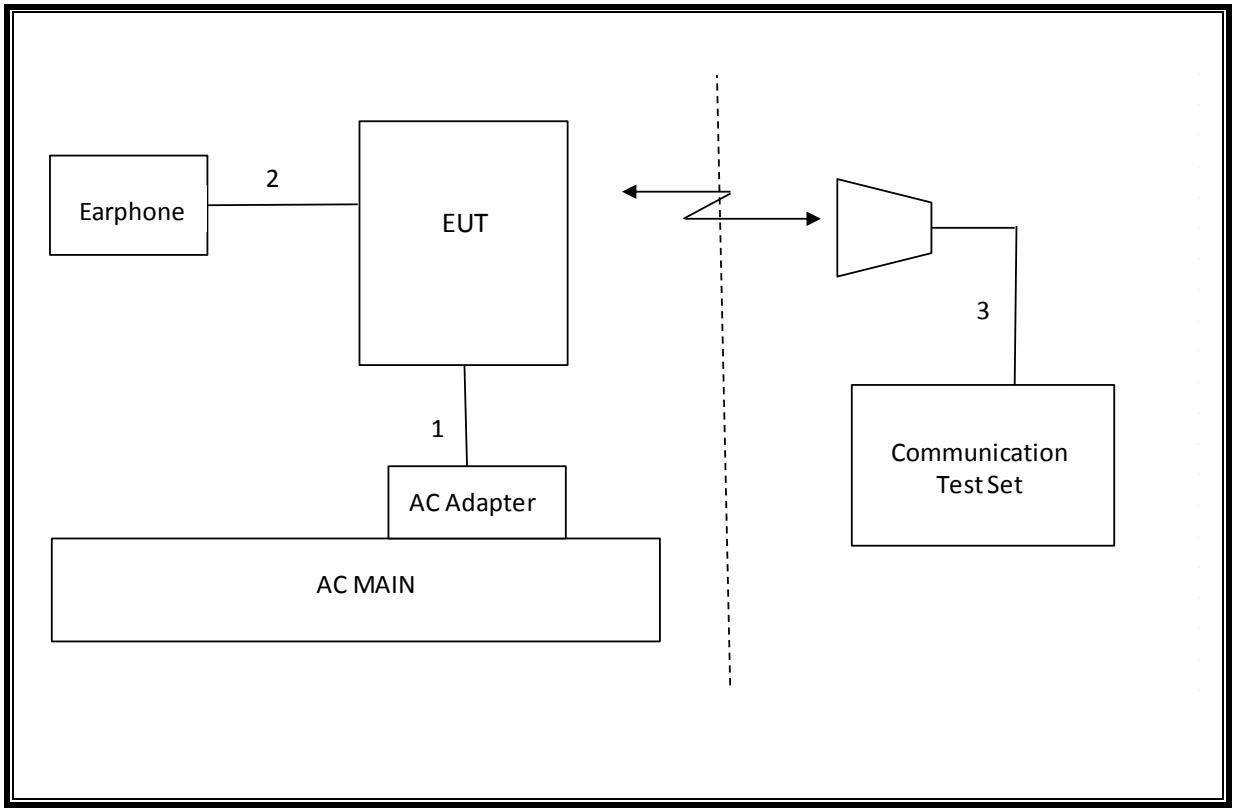

This report shall not be reproduced except in full, without the written approval of UL Verification Services Inc.

6. TEST AND MEASUREMENT EQUIPMENT

The following test and measurement equipment was utilized for the tests documented in this report:

TEST EQUIPMENT LIST				
Description	Manufacturer	Model	Asset	Cal Due
Spectrum Analyzer, 44 GHz	Agilent / HP	E4446A	123	10/28/15
Antenna, Bilog, 2 GHz	Sunol Sciences	JB1	T243	12/08/15
Antenna, Horn, 18 GHz	EMCO	3115	C00783	10/25/15
Antenna, Horn, 18 GHz	EMCO	3115	C00784	10/25/15
Highpass Filter, 2.7 GHz	Micro-Tronics	HPM13194	N02687	CNR
Highpass Filter, 1.5 GHz	Micro-Tronics	HPM13193	N02688	CNR
Temperature / Humidity Chamber	Thermotron	SE 600-10-10	T80	11/01/15
Communications Test Set	R&S	CMW500	T232	01/14/16
DC power supply, 8 V @ 3 A or 15 V	Agilent / HP	E3610A	None	CNR
Vector signal generator, 6 GHz	Agilent / HP	E4438C	T201	06/16/16
Antenna, Tuned Dipole 400~1000	ETS	6502	158071	10/14/15
Directional Coupler	RF-Lambda	RFDC5M06G15	None	CNR
Antenna, Horn, 26.5 GHz	ARA	MWH-1826/B	C00589	12/17/15

Test Software List			
Description	Manufacturer	Model	Version
Radiated Software	UL	UL EMC	Version 9.5, 07/22/14
Conducted Software	UL	UL EMC	Version 9.5, 05/17/14
CLT Software	UL	UL RF	Version 1.0, 02/02/15
Antenna Port Software	UL	UL RF	Version 2.1.1.1, 1/20/15

This report shall not be reproduced except in full, without the written approval of UL Verification Services Inc.

7. SUMMARY TABLE

C2PC reason: Please see LG-H740 change note for details.

FCC Part Section	RSS Section(s)	Test Description	Test Limit	Test Condition	Test Result	Note
2.1049	N/A	Occupied Band width (99%)	N/A	Conducted	Pass	see original
22.917(a) 24.238(a) 27.53(g) 90.691	RSS-132(4.5.1) RSS-133(6.5.1) RSS-139(6.5.1)	Band Edge / Conducted Spurious Emission	-13dBm		Pass	see original
27.50(a)			-40dBm		Pass	see original
2.1046	N/A	Conducted output power	N/A		Pass	33.1 dBm
27.53(m) 90.691	RSS-199(4.5)	Emission Mask			see original	
22.355 24.235 27.54 90.213	RSS-132(4.3) RSS-133(6.3) RSS-139(6.3) RSS-199(4.3)	Frequency Stability	2.5PPM		Pass	see original
22.913(a)(2)	RSS-132(4.4)	Effective Radiated Power	38 dBm	Radiated	Pass	27.2 dBm
24.232(c) 27.50(h)(2)	RSS-133(6.4) RSS-199(4.4)	Equivalent Isotropic Radiated Power	33dBm		Pass	28.91dBm
27.50(d)(4)	RSS-139(6.4)		30dBm		Pass	26.87dBm
22.917(a) 24.238(a) 27.53(g)	RSS-132(4.5.1) RSS-133(6.5.1) RSS-139(6.5.1)	Radiated Spurious Emission	-13dBm		Pass	-37.6dBm
27.50(a)			-40dBm		Pass	-44.9 dBm

UL VERIFICATION SERVICES INC. FORM NO: CCSUP4701H
47173 BENICIA STREET, FREMONT, CA 94538, USA TEL: (510) 771-1000 FAX: (510) 661-0888

This report shall not be reproduced except in full, without the written approval of UL Verification Services Inc.

8. RF POWER OUTPUT VERIFICATION

8.1. GSM/GPRS/EDGE

Function: Menu select > GSM Mobile Station > GSM 850/900/1800/1900

Press Connection control to choose the different menus

Press RESET > choose all to reset all settings

Connection Press Signal Off to turn off the signal and change settings

Network Support > GSM+GPRS or GSM+EGPRS

Main Service > Packet Data

Service selection > Test Mode A – Auto Slot Config. off

MS Signal Press Slot Config bottom on the right twice to select and change the number of time slots and power setting

> Slot configuration > Uplink/Gamma

> 33 dBm for GPRS 850/900

> 30 dBm for GPRS1800/1900

BS Signal Enter the same channel number for TCH channel (test channel) and BCCH channel

Frequency Offset > + 0 Hz

Mode > BCCH and TCH

BCCH Level > -85 dBm (May need to adjust if link is not stable)

BCCH Channel > choose desire test channel [Enter the same channel number for TCH channel (test channel) and BCCH channel]

Channel Type > Off

P0> 4 dB

Slot Config > Unchanged (if already set under MS Signal)

TCH > choose desired test channel

Hopping > Off

Main Timeslot > 3 (Default)

Network Coding Scheme > CS4 (GPRS) and MCS5 ~ MCS9 (EGPRS)

Bit Stream > 2E9-1PSR Bit Pattern

AF/RF Enter appropriate offsets for Ext. Att. Output and Ext. Att. Input

Connection Press Signal On to turn on the signal and change settings

UL VERIFICATION SERVICES INC. FORM NO: CCSUP4701H
47173 BENICIA STREET, FREMONT, CA 94538, USA TEL: (510) 771-1000 FAX: (510) 661-0888

This report shall not be reproduced except in full, without the written approval of UL Verification Services Inc.

8.1.1. GSM OUTPUT POWER RESULT

Mode	Coding Scheme	Time Slots	Ch No.	Freq. (MHz)	Burst Pwr (dBm)
GSM (Voice)	CS1	1	128	824.2	33.0
			190	836.6	33.0
			251	848.8	33.0
GPRS (GMSK)	CS1	1	128	824.2	33.0
			190	836.6	33.0
			251	848.8	33.1
		2	128	824.2	32.2
			190	836.6	32.1
			251	848.8	32.2
EGPRS (8PSK)	MCS5	1	128	824.2	27.5
			190	836.6	27.4
			251	848.8	27.5
		2	128	824.2	26.5
			190	836.6	26.3
			251	848.8	26.4

Mode	Coding Scheme	Time Slots	Ch No.	Freq. (MHz)	Burst Pwr (dBm)
GSM (Voice)	CS1	1	512	1850.2	29.4
			661	1880.0	29.5
			810	1909.8	29.6
GPRS (GMSK)	CS1	1	512	1850.2	29.5
			661	1880.0	29.6
			810	1909.8	29.6
		2	512	1850.2	27.6
			661	1880.0	27.4
			810	1909.8	27.3
EGPRS (8PSK)	MCS5	1	512	1850.2	25.6
			661	1880.0	25.5
			810	1909.8	25.5
		2	512	1850.2	24.5
			661	1880.0	24.5
			810	1909.8	24.4

UL VERIFICATION SERVICES INC. FORM NO: CCSUP4701H
47173 BENICIA STREET, FREMONT, CA 94538, USA TEL: (510) 771-1000 FAX: (510) 661-0888
This report shall not be reproduced except in full, without the written approval of UL Verification Services Inc.

8.2. UMTS REL 99

TEST PROCEDURE

The following summary of these settings are illustrated below:

	Mode	Rel99
	Subtest	-
WCDMA General Settings	Loopback Mode	Test Mode 1
	Rel99 RMC	12.2kbps RMC
	HSDPA FRC	Not Applicable
	HSUPA Test	Not Applicable
	Power Control Algorithm	Algorithm2
	βc	Not Applicable
	βd	Not Applicable
	βec	Not Applicable
	βc/βd	8/15
	βhs	Not Applicable
	βed	Not Applicable

8.2.1. UMTS REL 99 OUTPUT POWER RESULT

Band	Mode	UL Ch No.	Freq. (MHz)	MPR	Avg Pwr (dBm)
W-CDMA Band V	Rel 99 (RMC, 12.2 kbps)	4132	826.4	0	24.0
		4183	836.6	0	24.2
		4233	846.6	0	24.2

Band	Mode	UL Ch No.	Freq. (MHz)	MPR	Avg Pwr (dBm)
W-CDMA Band V	Rel 99 (RMC, 12.2 kbps)	9721	1854.2	0	24.1
		9400	1880.0	0	24.1
		9537	1906.6	0	24.1

UL VERIFICATION SERVICES INC. FORM NO: CCSUP4701H
47173 BENICIA STREET, FREMONT, CA 94538, USA TEL: (510) 771-1000 FAX: (510) 661-0888
This report shall not be reproduced except in full, without the written approval of UL Verification Services Inc.

8.3. UMTS HSDPA

The following 4 Sub-tests were completed according to Release 5 procedures in section 5.2 of 3GPP TS34.121. A summary of these settings are illustrated below:

	Mode	Rel5 HSDPA			
	Subtest	1	2	3	4
WCDMA General Settings	Loopback Mode	Test Mode 1			
	Rel99 RMC	12.2kbps RMC			
	HSDPA FRC	H-Set1			
	Power Control Algorithm	Algorithm 2			
	βc	2/15	12/15	15/15	15/15
	βd	15/15	15/15	8/15	4/15
	Bd (SF)	64			
	βc/βd	2/15	12/15	15/8	15/4
	βhs	4/15	24/15	30/15	30/15
	MPR (dB)	0	0	0.5	0.5
HSDPA Specific Settings	D_{ACK}	8			
	D_{NAK}	8			
	DCQI	8			
	Ack-Nack repetition factor	3			
	CQI Feedback (Table 5.2B.4)	4ms			
	CQI Repetition Factor (Table 5.2B.4)	2			
	Ahs =βhs/βc	30/15			

UL VERIFICATION SERVICES INC. FORM NO: CCSUP4701H
47173 BENICIA STREET, FREMONT, CA 94538, USA TEL: (510) 771-1000 FAX: (510) 661-0888
This report shall not be reproduced except in full, without the written approval of UL Verification Services Inc.

8.3.1. UMTS HSDPA OUTPUT POWER RESULT

Band	Mode	UL Ch No.	Freq. (MHz)	MPR	Avg Pwr (dBm)
W-CDMA Band V	Subtest 1	4132	826.4	0	24.1
		4183	836.6	0	24.2
		4233	846.6	0	24.1
	Subtest 2	4132	826.4	0	24.0
		4183	836.6	0	24.1
		4233	846.6	0	24.1
	Subtest 3	4132	826.4	0.5	23.5
		4183	836.6	0.5	23.6
		4233	846.6	0.5	23.6
	Subtest 4	4132	826.4	0.5	23.4
		4183	836.6	0.5	23.6
		4233	846.6	0.5	23.6

Band	Mode	UL Ch No.	Freq. (MHz)	MPR	Avg Pwr (dBm)
W-CDMA Band V	Subtest 1	9721	1854.2	0	24.1
		9400	1880.0	0	24.0
		9537	1906.6	0	24.0
	Subtest 2	9721	1854.2	0	24.1
		9400	1880.0	0	24.0
		9537	1906.6	0	24.0
	Subtest 3	9721	1854.2	0.5	23.7
		9400	1880.0	0.5	23.5
		9537	1906.6	0.5	23.5
	Subtest 4	9721	1854.2	0.5	23.6
		9400	1880.0	0.5	23.5
		9537	1906.6	0.5	23.5

This report shall not be reproduced except in full, without the written approval of UL Verification Services Inc.

8.3.2. UMTS HSUPA

TEST PROCEDURE

The following summary of these settings are illustrated below: (ETSI TS 134.121-1 Table C.11.1)

	Mode	Rel6 HSUPA	Rel6 HSUPA	Rel6 HSUPA	Rel6 HSUPA	Rel6 HSUPA
	Subtest	1	2	3	4	5
WCDMA General Settings	Loopback Mode	Test Mode 1				
	P-CPICH (dB)	-10				
	P-CCPCH (dB)	-12				
	SCH (dB)	-12				
	PICH(dB)	-15				
	DPCH (dB)	-9				
	HS-SCCH_1 (dB)	-8				
	HS-PDSCH (dB)	-3				
	Rel99 RMC	12.2kbps RMC				
	HSDPA FRC	H-Set1				
	HSUPA Test	HSUPA Loopback				
	Power Control Algorithm	Algorithm2				
	Bc	11/15	6/15	15/15	2/15	15/15
	Bd	15/15	15/15	9/15	15/15	15/15
	Bec	209/225	12/15	30/15	2/15	5/15
	βc/βd	11/15	6/15	15/9	2/15	15/15
	Bhs	22/15	12/15	30/15	4/15	30/15
	βed (note1)	1309/225	94/75	47/15 47/15	56/75	134/15
	MPR	0	2	1	2	0
HSDPA Specific Settings	DACK	8				
	DNAK	8				
	DCQI	8				
	Ack-Nack repetition factor	3				
	CQI Feedback (Table 5.2B.4)	4ms				
	CQI Repetition Factor (Table 5.2B.4)	2				
	Ahs = βhs/βc	30/15				
HSUPA Specific Settings	D E-DPCCH	6	8	8	5	7
	DHARQ	0	0	0	0	0
	AG Index	20	12	15	17	21
	Reference E-TFCIs	5	5	2	5	5
	ETFCI (from 34.121 Table C.11.1.3)	75	67	92	71	81
	Associated Max UL Data Rate kbps	242.1	174.9	482.8	205.8	308.9
	Reference E_TFCIs	E-TFCI 11 E-TFCI PO 4 E-TFCI 67 E-TFCI PO 18 E-TFCI 71 E-TFCI PO 23 E-TFCI 75 E-TFCI PO 26 E-TFCI 81 E-TFCI PO 27		E-TFCI 11 E-TFCI PO 4 E-TFCI 92 E-TFCI PO 18	E-TFCI 11 E-TFCI PO 4 E-TFCI 67 E-TFCI PO 18 E-TFCI 71 E-TFCI PO 23 E-TFCI 75 E-TFCI PO 26 E-TFCI 81 E-TFCI PO 27	

Note1: βed cannot be set directly, it is set by Absolute Grant Value.

This report shall not be reproduced except in full, without the written approval of UL Verification Services Inc.

8.3.3. UMTS HSUPA OUTPUT POWER RESULT

Band	Mode	UL Ch No.	Freq. (MHz)	MPR	Avg Pwr (dBm)
W-CDMA Band V	Subtest 1	4132	826.4	0	23.0
		4183	836.6	0	23.7
		4233	846.6	0	23.6
	Subtest 2	4132	826.4	2	22.0
		4183	836.6	2	22.2
		4233	846.6	2	22.1
	Subtest 3	4132	826.4	1	23.0
		4183	836.6	1	23.1
		4233	846.6	1	23.1
	Subtest 4	4132	826.4	2	22.1
		4183	836.6	2	22.0
		4233	846.6	2	22.0
	Subtest 5	4132	826.4	0	24.0
		4183	836.6	0	24.0
		4233	846.6	0	24.0

Band	Mode	UL Ch No.	Freq. (MHz)	MPR	Avg Pwr (dBm)
W-CDMA Band V	Subtest 1	9721	1854.2	0	23.4
		9400	1880.0	0	23.4
		9537	1906.6	0	23.4
	Subtest 2	9721	1854.2	2	22.2
		9400	1880.0	2	22.2
		9537	1906.6	2	22.1
	Subtest 3	9721	1854.2	1	23.2
		9400	1880.0	1	23.2
		9537	1906.6	1	23.2
	Subtest 4	9721	1854.2	2	22.2
		9400	1880.0	2	22.2
		9537	1906.6	2	22.1
	Subtest 5	9721	1854.2	0	24.2
		9400	1880.0	0	24.1
		9537	1906.6	0	24.2

UL VERIFICATION SERVICES INC. FORM NO: CCSUP4701H
47173 BENICIA STREET, FREMONT, CA 94538, USA TEL: (510) 771-1000 FAX: (510) 661-0888
This report shall not be reproduced except in full, without the written approval of UL Verification Services Inc.

8.4. LTE OUTPUT VERIFICATION

8.4.1. LTE OUTPUT RESULT

LTE Band 2

Band	BW (MHz)	Mode	RB Allocation	RB offset	Target MPR	Avg Pwr (dBm)		
						18700	18900	19100
						1860 MHz	1880 MHz	1900 MHz
LTE Band 2	20	QPSK	1	0	0	24.61	24.66	24.66
			1	49	0	24.60	24.63	24.50
			1	99	0	24.37	24.56	24.61
			50	0	1	23.43	23.56	23.46
			50	24	1	23.48	23.60	23.57
			50	50	1	23.39	23.70	23.43
			100	0	1	23.40	23.56	23.48
		16QAM	1	0	1	22.78	23.16	23.36
			1	49	1	23.33	23.61	23.70
			1	99	1	22.93	23.30	23.45
			50	0	2	22.39	22.60	22.45
			50	24	2	22.39	22.63	22.47
			50	50	2	22.34	22.60	22.52
			100	0	2	22.36	22.61	22.54
Band	BW (MHz)	Mode	RB Allocation	RB offset	Target MPR	Avg Pwr (dBm)		
						18675	18900	19125
						1857.5 MHz	1880 MHz	1902.5 MHz
LTE Band 2	15	QPSK	1	0	0	24.58	24.44	24.66
			1	37	0	24.41	24.59	24.69
			1	74	0	24.49	24.68	24.70
			36	0	1	23.45	23.55	23.61
			36	20	1	23.51	23.61	23.70
			36	39	1	23.35	23.49	23.67
			75	0	1	23.44	23.59	23.64
		16QAM	1	0	1	23.67	23.24	23.17
			1	37	1	23.59	23.43	23.30
			1	74	1	23.40	23.23	23.31
			36	0	2	22.29	22.54	22.58
			36	20	2	22.35	22.49	22.63
			36	39	2	22.29	22.47	22.50
			75	0	2	22.35	22.50	22.58

UL VERIFICATION SERVICES INC. FORM NO: CCSUP4701H
47173 BENICIA STREET, FREMONT, CA 94538, USA TEL: (510) 771-1000 FAX: (510) 661-0888
This report shall not be reproduced except in full, without the written approval of UL Verification Services Inc.

Band	BW (MHz)	Mode	RB Allocation	RB offset	Target MPR	Avg Pwr (dBm)		
						18650	18900	19150
						1855 MHz	1880 MHz	1905 MHz
LTE Band 2	10	QPSK	1	0	0	24.52	24.61	24.52
			1	25	0	24.57	24.69	24.64
			1	49	0	24.44	24.65	24.49
			25	0	1	23.57	23.55	23.69
			25	12	1	23.47	23.66	23.68
			25	25	1	23.40	23.51	23.52
			50	0	1	23.46	23.61	23.56
		16QAM	1	0	1	23.52	23.23	23.12
			1	25	1	23.63	23.67	23.70
			1	49	1	23.26	23.27	23.34
			25	0	2	22.54	22.61	22.69
			25	12	2	22.53	22.67	22.67
			25	25	2	22.36	22.53	22.63
			50	0	2	22.33	22.33	22.60

Band	BW (MHz)	Mode	RB Allocation	RB offset	Target MPR	Avg Pwr (dBm)		
						18625	18900	19175
						1852.5 MHz	1880 MHz	1907.5 MHz
LTE Band 2	5	QPSK	1	0	0	24.47	24.47	24.66
			1	12	0	24.70	24.65	24.55
			1	24	0	24.26	24.61	24.61
			12	0	1	23.43	23.57	23.60
			12	7	1	23.49	23.61	23.53
			12	13	1	23.40	23.44	23.38
			25	0	1	23.45	23.46	23.48
		16QAM	1	0	1	23.05	22.82	23.12
			1	12	1	23.40	23.29	23.26
			1	24	1	22.73	22.73	23.00
			12	0	2	22.38	22.25	22.39
			12	7	2	22.46	22.41	22.52
			12	13	2	22.38	22.32	22.37
			25	0	2	22.43	22.51	22.54

This report shall not be reproduced except in full, without the written approval of UL Verification Services Inc.

Band	BW (MHz)	Mode	RB Allocation	RB offset	Target MPR	Avg Pwr (dBm)		
						18615	18900	19185
						1851.5 MHz	1880 MHz	1908.5 MHz
LTE Band 2	3	QPSK	1	0	0	24.37	24.65	24.54
			1	8	0	24.39	24.61	24.62
			1	14	0	24.41	24.50	24.57
			8	0	1	23.45	23.57	23.69
			8	4	1	23.50	23.52	23.66
			8	7	1	23.44	23.45	23.48
			15	0	1	23.46	23.47	23.51
		16QAM	1	0	1	23.53	23.05	23.28
			1	8	1	23.46	23.52	23.40
			1	14	1	23.51	22.91	23.15
			8	0	2	22.48	22.48	22.24
			8	4	2	22.55	22.45	22.26
			8	7	2	22.59	22.45	22.18
			15	0	2	22.46	22.17	22.47

Band	BW (MHz)	Mode	RB Allocation	RB offset	Target MPR	Avg Pwr (dBm)		
						18607	18900	19193
						1850.7 MHz	1880 MHz	1909.3 MHz
LTE Band 2	1.4	QPSK	1	0	0	24.32	24.51	24.70
			1	3	0	24.53	24.61	24.59
			1	5	0	24.52	24.56	24.60
			3	0	0	24.58	24.70	24.68
			3	1	0	24.53	24.68	24.67
			3	3	0	24.48	24.69	24.59
			6	0	1	23.47	23.58	23.53
		16QAM	1	0	1	23.11	23.23	23.66
			1	3	1	23.13	23.16	23.70
			1	5	1	23.24	23.04	23.19
			3	0	1	23.26	23.40	23.32
			3	1	1	23.46	23.54	23.31
			3	3	1	23.49	23.38	23.23
			6	0	2	22.34	22.48	22.55

This report shall not be reproduced except in full, without the written approval of UL Verification Services Inc.

LTE Band 4

Band	BW (MHz)	Mode	RB Allocation	RB offset	Target MPR	Avg Pwr (dBm)		
						20050	20175	20300
						1720 MHz	1732.5 MHz	1745 MHz
LTE Band 4	20	QPSK	1	0	0		24.69	
			1	49	0		24.53	
			1	99	0		24.43	
			50	0	1		23.31	
			50	24	1		23.35	
			50	50	1		23.31	
			100	0	1		23.37	
		16QAM	1	0	1		23.06	
			1	49	1		23.38	
			1	99	1		22.81	
			50	0	2		22.21	
			50	24	2		22.31	
			50	50	2		22.25	
			100	0	2		22.23	

Band	BW (MHz)	Mode	RB Allocation	RB offset	Target MPR	Avg Pwr (dBm)		
						20025	20175	20325
						1717.5 MHz	1732.5 MHz	1747.5 MHz
LTE Band 4	15	QPSK	1	0	0	24.36	24.55	24.55
			1	37	0	24.56	24.53	24.50
			1	74	0	24.30	24.35	24.37
			36	0	1	23.20	23.30	23.39
			36	20	1	23.44	23.41	23.24
			36	39	1	23.41	23.43	23.22
			75	0	1	23.27	23.41	23.27
		16QAM	1	0	1	22.84	23.35	23.28
			1	37	1	23.52	23.70	23.52
			1	74	1	23.15	23.68	23.06
			36	0	2	22.14	22.32	22.29
			36	20	2	22.31	22.18	22.32
			36	39	2	22.31	22.47	22.30
			75	0	2	22.36	22.36	22.38

This report shall not be reproduced except in full, without the written approval of UL Verification Services Inc.

Band	BW (MHz)	Mode	RB Allocation	RB offset	Target MPR	Avg Pwr (dBm)		
						20000	20175	20350
						1715 MHz	1732.5 MHz	1750 MHz
LTE Band 4	10	QPSK	1	0	0	24.29	24.53	24.43
			1	25	0	24.67	24.70	24.34
			1	49	0	24.50	24.51	24.42
			25	0	1	23.14	23.42	23.25
			25	12	1	23.37	23.37	23.29
			25	25	1	23.36	23.42	23.12
			50	0	1	23.32	23.34	23.22
		16QAM	1	0	1	23.07	23.70	23.52
			1	25	1	23.41	23.69	23.45
			1	49	1	23.47	23.70	23.50
			25	0	2	22.12	22.48	22.47
			25	12	2	22.37	22.33	22.47
			25	25	2	22.37	22.36	22.33
			50	0	2	22.14	22.31	22.23

Band	BW (MHz)	Mode	RB Allocation	RB offset	Target MPR	Avg Pwr (dBm)		
						19975	20175	20375
						1712.5 MHz	1732.5 MHz	1752.5 MHz
LTE Band 4	5	QPSK	1	0	0	24.35	24.31	24.30
			1	12	0	24.46	24.50	24.43
			1	24	0	24.30	24.55	24.47
			12	0	1	23.16	23.42	23.23
			12	7	1	23.12	23.37	23.26
			12	13	1	23.07	23.26	23.17
			25	0	1	23.09	23.38	23.22
		16QAM	1	0	1	22.80	23.03	23.01
			1	12	1	23.04	23.43	23.25
			1	24	1	22.78	23.11	23.16
			12	0	2	21.91	22.30	22.13
			12	7	2	21.88	22.42	22.12
			12	13	2	21.92	22.15	22.03
			25	0	2	21.98	22.27	22.16

UL VERIFICATION SERVICES INC. FORM NO: CCSUP4701H
47173 BENICIA STREET, FREMONT, CA 94538, USA TEL: (510) 771-1000 FAX: (510) 661-0888
This report shall not be reproduced except in full, without the written approval of UL Verification Services Inc.

Band	BW (MHz)	Mode	RB Allocation	RB offset	Target MPR	Avg Pwr (dBm)		
						19965	20175	20385
						1711.5 MHz	1732.5 MHz	1753.5 MHz
LTE Band 4	3	QPSK	1	0	0	24.27	24.46	24.64
			1	8	0	24.30	24.53	24.68
			1	14	0	24.09	24.47	24.57
			8	0	1	23.13	23.28	23.68
			8	4	1	23.26	23.39	23.70
			8	7	1	23.15	23.28	23.66
			15	0	1	23.19	23.44	23.56
		16QAM	1	0	1	22.98	23.49	23.25
			1	8	1	23.14	23.64	23.45
			1	14	1	22.86	23.70	23.02
			8	0	2	22.09	22.48	22.49
			8	4	2	21.93	22.31	22.45
			8	7	2	22.12	22.29	22.37
			15	0	2	21.96	22.31	22.48

Band	BW (MHz)	Mode	RB Allocation	RB offset	Target MPR	Avg Pwr (dBm)		
						19957	20175	20393
						1710.7 MHz	1732.5 MHz	1754.3 MHz
LTE Band 4	1.4	QPSK	1	0	0	24.36	24.37	24.57
			1	3	0	24.38	24.23	24.58
			1	5	0	24.38	24.17	24.43
			3	0	0	24.43	24.30	24.28
			3	1	0	24.31	24.31	24.48
			3	3	0	24.28	24.30	24.33
			6	0	1	23.20	23.26	23.29
		16QAM	1	0	1	23.10	23.50	23.53
			1	3	1	23.04	23.04	23.52
			1	5	1	23.21	23.11	23.54
			3	0	1	23.19	23.31	23.25
			3	1	1	22.96	23.23	23.55
			3	3	1	22.93	23.13	23.43
			6	0	2	21.82	22.21	22.16

This report shall not be reproduced except in full, without the written approval of UL Verification Services Inc.

LTE Band 5

Band	BW (MHz)	Mode	RB Allocation	RB offset	Target MPR	Avg Pwr (dBm)		
						20450	20525	20600
						829 MHz	836.5 MHz	844 MHz
LTE Band 5	10	QPSK	1	0	0		24.54	
			1	25	0		24.60	
			1	49	0		24.57	
			25	0	1		23.42	
			25	12	1		23.33	
			25	25	1		23.46	
			50	0	1		23.49	
		16QAM	1	0	1		23.32	
			1	25	1		23.53	
			1	49	1		23.70	
			25	0	2		22.36	
			25	12	2		22.46	
			25	25	2		22.53	
			50	0	2		22.43	

Band	BW (MHz)	Mode	RB Allocation	RB offset	Target MPR	Avg Pwr (dBm)		
						20425	20525	20625
						826.5 MHz	836.5 MHz	846.5 MHz
LTE Band 5	5	QPSK	1	0	0	24.34	24.52	24.59
			1	12	0	24.57	24.45	24.59
			1	24	0	24.48	24.23	24.47
			12	0	1	23.44	23.22	23.42
			12	7	1	23.43	23.28	23.50
			12	13	1	23.31	23.36	23.37
			25	0	1	23.40	23.40	23.47
		16QAM	1	0	1	22.98	23.01	23.07
			1	12	1	23.17	22.96	23.31
			1	24	1	23.02	23.10	22.92
			12	0	2	22.39	22.11	22.39
			12	7	2	22.47	22.29	22.36
			12	13	2	22.34	22.16	22.25
			25	0	2	22.36	22.34	22.43

UL VERIFICATION SERVICES INC. FORM NO: CCSUP4701H
47173 BENICIA STREET, FREMONT, CA 94538, USA TEL: (510) 771-1000 FAX: (510) 661-0888
This report shall not be reproduced except in full, without the written approval of UL Verification Services Inc.

Band	BW (MHz)	Mode	RB Allocation	RB offset	Target MPR	Avg Pwr (dBm)		
						20415	20525	20635
						825.5 MHz	836.5 MHz	847.5 MHz
LTE Band 5	3	QPSK	1	0	0	24.64	24.60	24.52
			1	8	0	24.66	24.49	24.59
			1	14	0	24.15	24.62	24.63
			8	0	1	23.52	23.25	23.62
			8	4	1	23.57	23.04	23.60
			8	7	1	23.48	23.22	23.60
			15	0	1	23.45	23.24	23.61
		16QAM	1	0	1	23.49	23.10	23.02
			1	8	1	23.49	23.44	23.39
			1	14	1	23.35	23.05	22.97
			8	0	2	22.50	22.25	22.32
			8	4	2	22.49	22.21	22.15
			8	7	2	22.50	22.24	22.15
			15	0	2	22.43	22.03	22.50

Band	BW (MHz)	Mode	RB Allocation	RB offset	Target MPR	Avg Pwr (dBm)		
						20407	20525	20643
						824.7 MHz	836.5 MHz	848.3 MHz
LTE Band 5	1.4	QPSK	1	0	0	24.43	24.22	24.45
			1	3	0	24.51	24.17	24.64
			1	5	0	24.44	24.19	24.42
			3	0	0	24.47	24.16	24.67
			3	1	0	24.69	24.19	24.54
			3	3	0	24.43	24.22	24.42
			6	0	1	23.38	23.28	23.44
		16QAM	1	0	1	23.38	23.05	23.00
			1	3	1	23.12	23.27	23.04
			1	5	1	23.08	22.96	23.04
			3	0	1	23.33	23.03	23.22
			3	1	1	23.42	22.98	23.13
			3	3	1	23.49	22.82	22.92
			6	0	2	22.47	22.34	22.32

UL VERIFICATION SERVICES INC. FORM NO: CCSUP4701H
47173 BENICIA STREET, FREMONT, CA 94538, USA TEL: (510) 771-1000 FAX: (510) 661-0888
This report shall not be reproduced except in full, without the written approval of UL Verification Services Inc.

LTE Band 12

Band	BW (MHz)	Mode	RB Allocation	RB offset	Target MPR	Avg Pwr (dBm)		
						23060	23095	23130
						704 MHz	707.5 MHz	711 MHz
LTE Band 12	10	QPSK	1	0	0	24.48	24.31	24.28
			1	25	0	24.70	24.52	24.36
			1	49	0	24.36	24.51	24.26
			25	0	1	23.21	23.28	23.31
			25	12	1	23.49	23.36	23.53
			25	25	1	23.39	23.41	23.36
			50	0	1	23.32	23.35	23.50
		16QAM	1	0	1	23.13	23.15	23.14
			1	25	1	23.56	23.40	23.48
			1	49	1	23.13	23.54	23.29
			25	0	2	22.25	22.46	22.56
			25	12	2	22.43	22.37	22.61
			25	25	2	22.40	22.50	22.54
			50	0	2	22.31	22.41	22.49

Band	BW (MHz)	Mode	RB Allocation	RB offset	Target MPR	Avg Pwr (dBm)		
						23035	23095	23155
						701.5 MHz	707.5 MHz	713.5 MHz
LTE Band 12	5	QPSK	1	0	0	24.57	24.70	24.48
			1	12	0	24.68	24.55	24.57
			1	24	0	24.53	24.45	24.55
			12	0	1	23.46	23.20	23.37
			12	7	1	23.42	23.12	23.53
			12	13	1	23.33	23.22	23.34
			25	0	1	23.51	23.30	23.39
		16QAM	1	0	1	23.10	22.79	23.12
			1	12	1	22.94	22.96	23.70
			1	24	1	22.97	23.09	23.03
			12	0	2	22.21	22.21	22.49
			12	7	2	22.31	22.04	22.31
			12	13	2	22.17	22.23	22.15
			25	0	2	22.43	22.33	22.32

UL VERIFICATION SERVICES INC. FORM NO: CCSUP4701H
47173 BENICIA STREET, FREMONT, CA 94538, USA TEL: (510) 771-1000 FAX: (510) 661-0888
This report shall not be reproduced except in full, without the written approval of UL Verification Services Inc.

Band	BW (MHz)	Mode	RB Allocation	RB offset	Target MPR	Avg Pwr (dBm)		
						23025	23095	23165
						700.5 MHz	707.5 MHz	714.5 MHz
LTE Band 12	3	QPSK	1	0	0	24.48	24.60	24.65
			1	8	0	24.57	24.39	24.56
			1	14	0	24.41	24.32	24.43
			8	0	1	23.50	23.06	23.45
			8	4	1	23.21	23.16	23.33
			8	7	1	23.37	23.25	23.37
			15	0	1	23.34	23.16	23.29
		16QAM	1	0	1	23.05	23.59	23.23
			1	8	1	23.51	23.46	23.69
			1	14	1	23.13	23.09	22.91
			8	0	2	22.40	22.23	22.22
			8	4	2	22.31	21.98	22.28
			8	7	2	22.38	22.16	22.05
			15	0	2	21.92	22.13	22.14

Band	BW (MHz)	Mode	RB Allocation	RB offset	Target MPR	Avg Pwr (dBm)		
						23017	23095	23173
						699.7 MHz	707.5 MHz	715.3 MHz
LTE Band 12	1.4	QPSK	1	0	0	24.32	24.20	24.22
			1	3	0	24.35	24.12	24.33
			1	5	0	24.49	24.08	24.47
			3	0	0	24.34	24.26	24.31
			3	1	0	24.32	24.40	24.61
			3	3	0	24.56	24.33	24.44
			6	0	1	23.37	23.01	23.30
		16QAM	1	0	1	22.91	23.22	23.19
			1	3	1	23.12	22.86	23.21
			1	5	1	22.98	22.81	23.26
			3	0	1	23.18	23.01	22.89
			3	1	1	22.97	23.23	23.05
			3	3	1	23.17	22.99	23.10
			6	0	2	22.44	22.05	22.21

LTE Band 17

Measured Results

LTE Band 17 is covered by LTE Band 12 due to similar frequency range, same maximum tune-up limit and same channel bandwidth.

UL VERIFICATION SERVICES INC. FORM NO: CCSUP4701H
47173 BENICIA STREET, FREMONT, CA 94538, USA TEL: (510) 771-1000 FAX: (510) 661-0888

This report shall not be reproduced except in full, without the written approval of UL Verification Services Inc.

LTE Band 30

Band	BW (MHz)	Mode	RB Allocation	RB offset	Target MPR	Avg Pwr (dBm)		
							27710	
							2310 MHz	
LTE Band 30	10	QPSK	1	0	0		22.50	
			1	25	0		22.62	
			1	49	0		22.53	
			25	0	1		21.62	
			25	12	1		21.48	
			25	25	1		21.49	
			50	0	1		21.55	
		16QAM	1	0	1		21.45	
			1	25	1		21.70	
			1	49	1		21.48	
			25	0	2		20.63	
			25	12	2		20.39	
			25	25	2		20.49	
			50	0	2		20.46	

Band	BW (MHz)	Mode	RB Allocation	RB offset	Target MPR	Avg Pwr (dBm)		
						27685	27710	27735
						2307.5 MHz	2310 MHz	2312.5 MHz
LTE Band 30	5	QPSK	1	0	0	22.33	22.57	22.37
			1	12	0	22.67	22.70	22.70
			1	24	0	22.14	22.34	22.43
			12	0	1	21.49	21.55	21.56
			12	7	1	21.52	21.51	21.47
			12	13	1	21.47	21.44	21.38
			25	0	1	21.55	21.51	21.49
		16QAM	1	0	1	21.02	21.30	21.21
			1	12	1	21.43	21.18	21.39
			1	24	1	20.87	20.81	21.13
			12	0	2	20.40	20.30	20.27
			12	7	2	20.47	20.30	20.24
			12	13	2	20.29	20.17	20.21
			25	0	2	20.38	20.24	20.47

UL VERIFICATION SERVICES INC. FORM NO: CCSUP4701H
47173 BENICIA STREET, FREMONT, CA 94538, USA TEL: (510) 771-1000 FAX: (510) 661-0888
This report shall not be reproduced except in full, without the written approval of UL Verification Services Inc.

9. RADIATED TEST RESULTS

9.1. RADIATED POWER (ERP & EIRP)

RULE PART(S)

FCC: §2.1046, §22.913, §24.232, §27

LIMITS

22.913(a) - The ERP of mobile transmitters and auxiliary test transmitters must not exceed 7 Watts.

24.232(c) - Mobile/portable stations are limited to 2 watts e.i.r.p. peak power and the equipment must employ means to limit the power to the minimum necessary for successful communications.

27.50(b) - (10) Portable stations (hand-held devices) transmitting in the 746-757 MHz, 776-788 MHz, and 805-806 MHz bands are limited to 3 watts ERP. (LTE B13)

27.50(c) - (10) Portable stations (hand-held devices) are limited to 3 watts ERP; (LTE B17)

27.50(d) - (4) Fixed, mobile, and portable (hand-held) stations operating in the 1710-1755 MHz band and mobile and portable stations operating in the 1695-1710 MHz and 1755-1780 MHz bands are limited to 1 watt EIRP.(Band 4)
27.50(h) - (2) Mobile stations are limited to 2.0 watts EIRP. All user stations are limited to 2.0 watts transmitter output power.(LTE B41 & 7)

In addition, when the transmitter power is measured in terms of average value, the peak-to-average ratio of the power shall not exceed 13dB.

TEST PROCEDURE

ANSI / TIA / EIA 603C Clause 2.2.17; PSA setting reference to 971168 D01 v02r02
For peak power measurement with a PSA:
a) Set the RBW ≥ OBW; b) Set VBW ≥ 3 × RBW; c) Set span ≥ 2 x RBW; d) Sweep time = auto couple; e) Detector = peak; f) Ensure that the number of measurement points ≥ span/RBW; g) Trace mode = max hold;

For average power measurement with a PSA:
a) Set span to at least 1.5 times the OBW; b) Set RBW = 1-5% of the OBW, not to exceed 1 MHz; c) Set VBW ≥ 3 x RBW; d) Set number of points in sweep ≥ 2 × span / RBW; e) Sweep time = auto-couple; f) Detector = RMS (power averaging); g) Use free run trigger If burst duty cycle ≥ 98; h) Use trigger to capture bursts If burst duty cycle < 98; i) Trace average at least 100 traces in power averaging (*i.e.*, RMS) mode. j) Compute the power by integrating the spectrum across the OBW of the signal using the instrument's band power measurement function.

MODES TESTED

GSM, WCDMA, and LTE

TEST RESULTS

UL VERIFICATION SERVICES INC. FORM NO: CCSUP4701H
47173 BENICIA STREET, FREMONT, CA 94538, USA TEL: (510) 771-1000 FAX: (510) 661-0888

This report shall not be reproduced except in full, without the written approval of UL Verification Services Inc.

9.1.1. ERP/EIRP Results

GSM

Band	Mode	Channel	f(MHz)	ERP / EIRP	
				dBm	mW
GSM1900	GPRS	512	1850.2	30.72	1180.32
		661	1880	30.17	1039.92
		810	1909.8	30.72	1180.32
	EGPRS	512	1850.2	28.34	682.34
		661	1880	28.17	656.15
		810	1909.8	28.40	691.83
GSM850	GPRS	128	824.2	27.20	524.81
		190	836.6	27.02	503.5
		251	848.8	26.86	485.29
	EGPRS	128	824.2	24.0	251.19
		190	836.6	23.93	247.17
		251	848.8	23.66	232.27

This report shall not be reproduced except in full, without the written approval of UL Verification Services Inc.

WCDMA

Band	Mode	Channel	f(MHz)	ERP / EIRP	
				dBm	mW
Band 2	REL99	9262	1852.4	24.917	310.3
		9400	1880	23.981	250.14
		9538	1907.6	24.498	281.71
	HSDPA	9262	1852.4	24.985	315.2
		9400	1880	24.133	259.05
		9538	1907.6	24.437	277.79
Band	Mode	Channel	f(MHz)	ERP / EIRP	
				dBm	mW
Band 5	REL99	4132	826.4	19.151	82.24
		4183	836.6	19.081	80.93
		4233	846.6	18.511	70.97
	HSDPA	4132	826.4	18.951	78.54
		4183	836.6	18.781	75.53
		4233	846.6	18.211	66.24

UL VERIFICATION SERVICES INC. FORM NO: CCSUP4701H
47173 BENICIA STREET, FREMONT, CA 94538, USA TEL: (510) 771-1000 FAX: (510) 661-0888
This report shall not be reproduced except in full, without the written approval of UL Verification Services Inc.

LTE Band 2

Band	BW (MHz)	Mode	RB/RB Size	f (MHz)	ERP / EIRP	
					dBm	mW
LTE2	20	QPSK	1/0	1860	28.51	709.58
			1/0	1880	26.11	408.32
			1/0	1900	27.81	603.95
		16QAM	1/0	1860	27.51	563.64
			1/0	1880	25.11	324.34
			1/0	1900	26.81	479.73
	15	QPSK	1/0	1857.5	27.61	576.77
			1/0	1880	26.17	414
			1/0	1902.5	27.61	576.77
		16QAM	1/0	1857.5	26.61	458.14
			1/0	1880	25.21	331.89
			1/0	1902.5	26.61	458.14
	10	QPSK	1/0	1855	27.51	563.64
			1/0	1880	26.11	408.32
			1/0	1905	27.51	563.64
		16QAM	1/0	1855	26.51	447.71
			1/0	1880	25.11	324.34
			1/0	1905	26.51	447.71
	5	QPSK	1/0	1852.5	28.91	778.04
			1/0	1880	25.81	381.07
			1/0	1907.5	27.71	590.2
		16QAM	1/0	1852.5	27.91	618.02
			1/0	1880	24.81	302.69
			1/0	1907.5	26.71	468.81

This report shall not be reproduced except in full, without the written approval of UL Verification Services Inc.

Band	BW (MHz)	Mode	RB/RB Size	f (MHz)	ERP / EIRP	
					dBm	mW
LTE2	3	QPSK	1/0	1851.5	28.01	632.41
			1/0	1880	26.01	399.02
			1/0	1908.5	27.01	502.34
		16QAM	1/0	1851.5	27.11	514.04
			1/0	1880	25.11	324.34
			1/0	1908.5	26.01	399.02
	1.4	QPSK	1/0	1850.7	28.01	632.41
			1/0	1880	26.01	399.02
			1/0	1909.3	27.01	502.34
		16QAM	1/0	1850.7	27.01	502.34
			1/0	1880	25.01	316.96
			1/0	1909.3	27.15	518.8

UL VERIFICATION SERVICES INC. FORM NO: CCSUP4701H
47173 BENICIA STREET, FREMONT, CA 94538, USA TEL: (510) 771-1000 FAX: (510) 661-0888
This report shall not be reproduced except in full, without the written approval of UL Verification Services Inc.

LTE Band 4

Band	BW (MHz)	Mode	RB/RB Size	f (MHz)	ERP / EIRP	
					dBm	mW
LTE4	20	QPSK	1/0	1720	26.5708	454.03
			1/0	1732.5	25.68105	369.92
			1/0	1745	25.2623	335.92
		16QAM	1/0	1720	25.2208	332.72
			1/0	1732.5	24.04105	253.57
			1/0	1745	23.9523	248.44
	15	QPSK	1/0	1717.5	26.65895	463.33
			1/0	1732.5	25.94105	392.74
			1/0	1747.5	26.86515	485.86
		16QAM	1/0	1717.5	26.03895	401.69
			1/0	1732.5	24.75105	298.61
			1/0	1747.5	25.64515	366.87
	10	QPSK	1/0	1715	26.7131	469.15
			1/0	1732.5	26.41105	437.63
			1/0	1750	26.653	462.7
		16QAM	1/0	1715	25.3131	339.87
			1/0	1732.5	26.03105	400.96
			1/0	1750	25.423	348.58
	5	QPSK	1/0	1712.5	26.85225	484.42
			1/0	1732.5	25.38205	345.31
			1/0	1752.5	24.17885	261.75
		16QAM	1/0	1712.5	25.10225	323.76
			1/0	1732.5	23.07205	202.86
			1/0	1752.5	23.03885	201.32

UL VERIFICATION SERVICES INC. FORM NO: CCSUP4701H
47173 BENICIA STREET, FREMONT, CA 94538, USA TEL: (510) 771-1000 FAX: (510) 661-0888
This report shall not be reproduced except in full, without the written approval of UL Verification Services Inc.

Band	BW (MHz)	Mode	RB/RB Size	f (MHz)	ERP / EIRP	
					dBm	mW
LTE4	3	QPSK	1/0	1711.5	26.85225	484.42
			1/0	1732.5	25.38205	345.31
			1/0	1753.5	24.17885	261.75
		16QAM	1/0	1711.5	25.10225	323.76
			1/0	1732.5	23.07205	202.86
			1/0	1753.5	23.03885	201.32
	1.4	QPSK	1/0	1710.7	26.655838	463
			1/0	1732.5	25.82205	382.12
			1/0	1754.3	25.383262	345.4
		16QAM	1/0	1710.7	25.035838	318.85
			1/0	1732.5	24.72205	296.62
			1/0	1754.3	24.323262	270.6

UL VERIFICATION SERVICES INC. FORM NO: CCSUP4701H
47173 BENICIA STREET, FREMONT, CA 94538, USA TEL: (510) 771-1000 FAX: (510) 661-0888
This report shall not be reproduced except in full, without the written approval of UL Verification Services Inc.

LTE Band 5

Band	BW (MHz)	Mode	RB/RB Size	f (MHz)	ERP / EIRP	
					dBm	mW
LTE5	10	QPSK	1/0	829	21.001	125.92
			1/0	836.5	20.231	105.46
			1/0	844	19.961	99.11
		16QAM	1/0	829	20.001	100.02
			1/0	836.5	20.131	103.06
			1/0	844	20.061	101.41
	5	QPSK	1/0	826.5	20.901	123.06
			1/0	836.5	20.031	100.72
			1/0	846.5	19.761	94.65
		16QAM	1/0	826.5	19.801	95.52
			1/0	836.5	19.931	98.42
			1/0	846.5	19.661	92.49
	3	QPSK	1/0	825.5	20.901	123.06
			1/0	836.5	20.031	100.72
			1/0	847.5	19.661	92.49
		16QAM	1/0	825.5	19.901	97.75
			1/0	836.5	19.931	98.42
			1/0	847.5	19.561	90.39
	1.4	QPSK	1/0	824.7	21.001	125.92
			1/0	836.5	20.031	100.72
			1/0	848.3	19.561	90.39
		16QAM	1/0	824.7	19.701	93.35
			1/0	836.5	19.931	98.42
			1/0	848.3	19.461	88.33

This report shall not be reproduced except in full, without the written approval of UL Verification Services Inc.

LTE Band 12

Band	BW (MHz)	Mode	RB/RB Size	f (MHz)	ERP / EIRP	
					dBm	mW
LTE12	10	QPSK	1/0	704	20.801	120.25
			1/0	707.5	21.001	125.92
			1/0	711	21.201	131.86
		16QAM	1/0	704	19.801	95.52
			1/0	707.5	20.001	100.02
			1/0	711	20.101	102.35
	5	QPSK	1/0	701.5	20.801	120.25
			1/0	707.5	20.881	122.49
			1/0	713.5	21.001	125.92
		16QAM	1/0	701.5	19.801	95.52
			1/0	707.5	19.901	97.75
			1/0	713.5	21.101	128.85
	3	QPSK	1/0	700.5	20.701	117.52
			1/0	707.5	21.001	125.92
			1/0	714.5	21.201	131.86
		16QAM	1/0	700.5	19.801	95.52
			1/0	707.5	20.001	100.02
			1/0	714.5	20.301	107.18
	1.4	QPSK	1/0	699.7	20.801	120.25
			1/0	707.5	20.881	122.49
			1/0	715.3	21.201	131.86
		16QAM	1/0	699.7	19.801	95.52
			1/0	707.5	20.001	100.02
			1/0	715.3	20.201	104.74

LTE Band 17

Measured Results

LTE Band 17 is covered by LTE Band 12 due to similar frequency range, same maximum tune-up limit and same channel bandwidth.

This report shall not be reproduced except in full, without the written approval of UL Verification Services Inc.

LTE Band 30

Band	BW (MHz)	Mode	RB/RB Size	f (MHz)	ERP / EIRP	
					dBm	mW
LTE30	10	QPSK	1/0	2310	20.9	123.03
		16QAM	1/0	2310	20.01	100.23
	5	QPSK	1/0	2307.5	20.10	102.33
			1/0	2310	20.60	114.82
			1/0	2312.5	20.94	124.17
		16QAM	1/0	2307.5	19.11	81.47
			1/0	2310	19.93	98.40
			1/0	2312.5	19.49	88.92

UL VERIFICATION SERVICES INC. FORM NO: CCSUP4701H
47173 BENICIA STREET, FREMONT, CA 94538, USA TEL: (510) 771-1000 FAX: (510) 661-0888
This report shall not be reproduced except in full, without the written approval of UL Verification Services Inc.

9.1.2. ERP/EIRP PLOTS

GSM

Band

GSM

850

EGPRS

High Frequency Substitution Measurement
UL Verification Services, Inc. Chamber C

Company: LG
Project #: 15I21442
Date: 8/5/2015
Test Engineer: Jude Semana
Configuration: EUT Only
Mode: EGPRS850

Test Equipment:
Receiving: Sunol T185, and 3m Chamber C N-type Cable
Substitution: Dipole T273, 4ft SMA Cable Warehouse.

f MHz	SG reading (dBm)	Ant. Pol. (H/V)	Cable Loss (dB)	Antenna Gain (dBd)	ERP (dBm)	Limit (dBm)	Margin (dB)	Notes
Low Ch								
824.20	17.90	V	0.9	0.0	17.00	38.5	-21.5	
824.20	24.90	H	0.9	0.0	24.00	38.5	-14.5	
Mid Ch								
836.60	18.02	V	0.9	0.0	17.12	38.5	-21.3	
836.60	24.83	H	0.9	0.0	23.93	38.5	-14.5	
High Ch								
848.80	17.80	V	0.9	0.0	16.90	38.5	-21.6	
848.80	24.56	H	0.9	0.0	23.66	38.5	-14.8	

Rev. 3.17.11
Note: For Band 13/17 ERP limit is 34.77dBm; For Band 26 limit is 50dBm

UL VERIFICATION SERVICES INC. FORM NO: CCSUP4701H
47173 BENICIA STREET, FREMONT, CA 94538, USA TEL: (510) 771-1000 FAX: (510) 661-0888
This report shall not be reproduced except in full, without the written approval of UL Verification Services Inc.

High Frequency Substitution Measurement
UL Verification Services, Inc. Chamber C

Company: LG
Project #: 15I21442
Date: 8/5/2015
Test Engineer: Jude Semana
Configuration: EUT Only
Mode: GPRS850

Band

GSM

850

GPRS

Test Equipment:
Receiving: Sunol T185, and 3m Chamber C N-type Cable
Substitution: Dipole T273, 4ft SMA Cable Warehouse.

f MHz	SG reading (dBm)	Ant. Pol. (H/V)	Cable Loss (dB)	Antenna Gain (dBd)	ERP (dBm)	Limit (dBm)	Margin (dB)	Notes
Low Ch								
824.20	19.20	V	0.9	0.0	18.30	38.5	-20.2	
824.20	28.10	H	0.9	0.0	27.20	38.5	-11.3	
Mid Ch								
836.60	19.12	V	0.9	0.0	18.22	38.5	-20.2	
836.60	27.92	H	0.9	0.0	27.02	38.5	-11.4	
High Ch								
848.80	19.10	V	0.9	0.0	18.20	38.5	-20.3	
848.80	27.76	H	0.9	0.0	26.86	38.5	-11.6	

Rev. 3.17.11
Note: For Band 13/17 ERP limit is 34.77dBm; For Band 26 limit is 50dBm

This report shall not be reproduced except in full, without the written approval of UL Verification Services Inc.

Band

GSM

1900

EGPRS

High Frequency Substitution Measurement
UL Verification Services, Inc.

Company: LG
Project #: 15I21442
Date: 8/3/2015
Test Engineer: J. Wu and O. Stoelting
Configuration: X-pos EUT Only
Location: Chamber B
Mode: EGPRS 1900 MHz Fundamentals

Test Equpment:
Receiving: Horn T345, and Chamber B SMA Cables
Substitution: Horn T60, T1096 N-type Cable

f MHz	SG reading (dBm)	Ant. Pol. (H/V)	Cable Loss (dB)	Antenna Gain (dBi)	EIRP (dBm)	Limit (dBm)	Delta (dB)	Notes
Low Ch								
1850.20	16.39	V	0.9	9.3	24.74	33.0	-8.3	
1850.20	19.98	H	0.9	9.3	28.34	33.0	-4.7	
Mid Ch								
1880.00	17.22	V	0.9	9.2	25.47	33.0	-7.5	
1880.00	19.92	H	0.9	9.2	28.17	33.0	-4.8	
High Ch								
1909.80	17.49	V	0.9	9.0	25.62	33.0	-7.4	
1909.80	20.26	H	0.9	9.0	28.40	33.0	-4.6	

UL VERIFICATION SERVICES INC. FORM NO: CCSUP4701H
47173 BENICIA STREET, FREMONT, CA 94538, USA TEL: (510) 771-1000 FAX: (510) 661-0888
This report shall not be reproduced except in full, without the written approval of UL Verification Services Inc.

Band

GSM

1900

GPRS

High Frequency Substitution Measurement
UL Verification Services, Inc.

Company: LG
Project #: 15I21442
Date: 8/3/2015
Test Engineer: J. Wu and O. Stoelting
Configuration: X-pos EUT Only
Location: Chamber B
Mode: GPRS 1900 MHz Fundamentals

Test Equpment:
Receiving: Horn T345, and Chamber B SMA Cables
Substitution: Horn T60, T1096 N-type Cable

f MHz	SG reading (dBm)	Ant. Pol. (H/V)	Cable Loss (dB)	Antenna Gain (dBi)	EIRP (dBm)	Limit (dBm)	Delta (dB)	Notes
Low Ch								
1850.20	18.28	V	0.9	9.3	26.63	33.0	-6.4	
1850.20	22.37	H	0.9	9.3	30.72	33.0	-2.3	
Mid Ch								
1880.00	19.54	V	0.9	9.2	27.79	33.0	-5.2	
1880.00	21.92	H	0.9	9.2	30.17	33.0	-2.8	
High Ch								
1909.80	18.05	V	0.9	9.0	26.18	33.0	-6.8	
1909.80	22.58	H	0.9	9.0	30.72	33.0	-2.3	

This report shall not be reproduced except in full, without the written approval of UL Verification Services Inc.

WCDMA

Band

Band 2

HSDPA

High Frequency Substitution Measurement
UL Verification Services, Inc.

Company: LG
Project #: 15I21442
Date: 8/3/2015
Test Engineer: J. Wu and O. Stoelting
Configuration: X-pos EUT Only
Location: Chamber B
Mode: HSDPA Band 2 Fundamentals

Test Equpment:
Receiving: Horn T345, and Chamber B SMA Cables
Substitution: Horn T60, T1096 N-type Cable

f MHz	SG reading (dBm)	Ant. Pol. (H/V)	Cable Loss (dB)	Antenna Gain (dBi)	EIRP (dBm)	Limit (dBm)	Delta (dB)	Notes
Low Ch								
1852.40	14.86	V	0.9	9.3	23.21	33.0	-9.8	
1852.40	16.63	H	0.9	9.3	24.99	33.0	-8.0	
Mid Ch								
1880.00	13.21	V	0.9	9.2	21.46	33.0	-11.5	
1880.00	15.88	H	0.9	9.2	24.13	33.0	-8.9	
High Ch								
1907.60	12.86	V	0.9	9.0	20.99	33.0	-12.0	
1907.60	16.30	H	0.9	9.0	24.44	33.0	-8.6	

UL VERIFICATION SERVICES INC. FORM NO: CCSUP4701H
47173 BENICIA STREET, FREMONT, CA 94538, USA TEL: (510) 771-1000 FAX: (510) 661-0888
This report shall not be reproduced except in full, without the written approval of UL Verification Services Inc.

Band

Band 2

REL99

High Frequency Substitution Measurement
UL Verification Services, Inc.

Company: LG
Project #: 15I21442
Date: 8/3/2015
Test Engineer: J. Wu and O. Stoelting
Configuration: X-pos EUT Only
Location: Chamber B
Mode: Rel99 Band 2 Fundamentals

Test Equpment:
Receiving: Horn T345, and Chamber B SMA Cables
Substitution: Horn T60, T1096 N-type Cable

f MHz	SG reading (dBm)	Ant. Pol. (H/V)	Cable Loss (dB)	Antenna Gain (dBi)	EIRP (dBm)	Limit (dBm)	Delta (dB)	Notes
Low Ch								
1852.40	14.92	V	0.9	9.3	23.27	33.0	-9.7	
1852.40	16.57	H	0.9	9.3	24.92	33.0	-8.1	
Mid Ch								
1880.00	15.56	V	0.9	9.2	23.81	33.0	-9.2	
1880.00	15.73	H	0.9	9.2	23.98	33.0	-9.0	
High Ch								
1907.60	15.25	V	0.9	9.0	23.38	33.0	-9.6	
1907.60	16.36	H	0.9	9.0	24.50	33.0	-8.5	

This report shall not be reproduced except in full, without the written approval of UL Verification Services Inc.

Band

Band 5

HSDPA

High Frequency Substitution Measurement
UL Verification Services, Inc.

Company: LG
Project #: 15I21442
Date: 8/5/2015
Test Engineer: Jude Semana
Configuration: EUT Only
Mode: WCDMA Band 5 HSDPA

Test Equipment:
Receiving: Sunol T185, and 3m Chamber C N-type Cable
Substitution: Dipole T273, 4ft SMA Cable Warehouse.

f MHz	SG reading (dBm)	Ant. Pol. (H/V)	Cable Loss (dB)	Antenna Gain (dBd)	ERP (dBm)	Limit (dBm)	Margin (dB)	Notes
Low Ch								
826.40	15.90	V	0.9	0.0	15.05	38.5	-23.4	
826.40	19.80	H	0.9	0.0	18.95	38.5	-19.5	
Mid Ch								
836.60	15.82	V	0.9	0.0	14.97	38.5	-23.5	
836.60	19.63	H	0.9	0.0	18.78	38.5	-19.7	
High Ch								
846.60	15.40	V	0.9	0.0	14.55	38.5	-23.9	
846.60	19.06	H	0.9	0.0	18.21	38.5	-20.2	

Rev. 3.17.11
Note: For Band 13/17 ERP limit is 34.77dBm; For Band 26 limit is 50dBm

UL VERIFICATION SERVICES INC. FORM NO: CCSUP4701H
47173 BENICIA STREET, FREMONT, CA 94538, USA TEL: (510) 771-1000 FAX: (510) 661-0888
This report shall not be reproduced except in full, without the written approval of UL Verification Services Inc.

Band

Band 5

REL99

High Frequency Substitution Measurement
UL Verification Services, Inc.

Company: LG
Project #: 15I21442
Date: 8/5/2015
Test Engineer: Jude Semana
Configuration: EUT Only
Mode: REL99 B5 FUND

Test Equipment:
Receiving: Sunol T185, and 3m Chamber C N-type Cable
Substitution: Dipole T273, 4ft SMA Cable Warehouse.

f MHz	SG reading (dBm)	Ant. Pol. (H/V)	Cable Loss (dB)	Antenna Gain (dBd)	ERP (dBm)	Limit (dBm)	Margin (dB)	Notes
Low Ch								
826.40	16.00	V	0.9	0.0	15.15	38.5	-23.3	
826.40	20.00	H	0.9	0.0	19.15	38.5	-19.3	
Mid Ch								
836.60	16.02	V	0.9	0.0	15.17	38.5	-23.3	
836.60	19.93	H	0.9	0.0	19.08	38.5	-19.4	
High Ch								
846.60	15.70	V	0.9	0.0	14.85	38.5	-23.6	
846.60	19.36	H	0.9	0.0	18.51	38.5	-19.9	

Rev. 3.17.11
Note: For Band 13/17 ERP limit is 34.77dBm; For Band 26 limit is 50dBm

UL VERIFICATION SERVICES INC. FORM NO: CCSUP4701H
47173 BENICIA STREET, FREMONT, CA 94538, USA TEL: (510) 771-1000 FAX: (510) 661-0888
This report shall not be reproduced except in full, without the written approval of UL Verification Services Inc.

LTE Band 2

Band

LTE2

20MHz

16QAM

High Frequency Substitution Measurement
UL Verification Services, Inc.

Company: LG
Project #: 15I21442
Date: 8/4/2015
Test Engineer: Jude Semana
Configuration: EUT Only
Location: Chamber C
Mode: LTE_16QAM Band 2 Fundamentals, 20MHz Bandwidth

Test Equpment:
Receiving: Horn T345 and Chamber B SMA Cables
Substitution: Horn T59 Substitution, 4ft SMA Cable Warehouse

f MHz	SG reading (dBm)	Ant. Pol. (H/V)	Cable Loss (dB)	Antenna Gain (dBi)	EIRP (dBm)	Limit (dBm)	Delta (dB)	Notes
Low Ch								
1860.00	5.60	V	0.9	8.0	12.71	33.0	-20.3	
1860.00	20.40	H	0.9	8.0	27.51	33.0	-5.5	
Mid Ch								
1880.00	4.00	V	0.9	8.0	11.11	33.0	-21.9	
1880.00	18.00	H	0.9	8.0	25.11	33.0	-7.9	
High Ch								
1900.00	4.80	V	0.9	8.0	11.91	33.0	-21.1	
1900.00	19.70	H	0.9	8.0	26.81	33.0	-6.2	

UL VERIFICATION SERVICES INC. FORM NO: CCSUP4701H
47173 BENICIA STREET, FREMONT, CA 94538, USA TEL: (510) 771-1000 FAX: (510) 661-0888
This report shall not be reproduced except in full, without the written approval of UL Verification Services Inc.

Band

LTE2

20MHz

QPSK

High Frequency Substitution Measurement
UL Verification Services, Inc.

Company: LG
Project #: 15I21442
Date: 8/4/2015
Test Engineer: Jude Semana
Configuration: EUT Only
Location: Chamber C
Mode: LTE_QPSK Band 2 Fundamentals, 20MHz Bandwidth

Test Equipment:
Receiving: Horn T345 and Chamber B SMA Cables
Substitution: Horn T59 Substitution, 4ft SMA Cable Warehouse

f MHz	SG reading (dBm)	Ant. Pol. (H/V)	Cable Loss (dB)	Antenna Gain (dBi)	EIRP (dBm)	Limit (dBm)	Delta (dB)	Notes
Low Ch								
1860.00	6.60	V	0.9	8.0	13.71	33.0	-19.3	
1860.00	21.40	H	0.9	8.0	28.51	33.0	-4.5	
Mid Ch								
1880.00	5.00	V	0.9	8.0	12.11	33.0	-20.9	
1880.00	19.00	H	0.9	8.0	26.11	33.0	-6.9	
High Ch								
1900.00	5.80	V	0.9	8.0	12.91	33.0	-20.1	
1900.00	20.70	H	0.9	8.0	27.81	33.0	-5.2	

This report shall not be reproduced except in full, without the written approval of UL Verification Services Inc.

Band

LTE2

15MHz

16QAM

High Frequency Substitution Measurement
UL Verification Services, Inc.

Company: LG
Project #: 15I21442
Date: 8/4/2015
Test Engineer: Jude Semana
Configuration: EUT Only
Location: Chamber C
Mode: LTE_16QAM Band 2 Fundamentals, 15MHz Bandwidth

Test Equpment:
Receiving: Horn T345 and Chamber B SMA Cables
Substitution: Horn T59 Substitution, 4ft SMA Cable Warehouse

f MHz	SG reading (dBm)	Ant. Pol. (H/V)	Cable Loss (dB)	Antenna Gain (dBi)	EIRP (dBm)	Limit (dBm)	Delta (dB)	Notes
Low Ch								
1857.50	5.30	V	0.9	8.0	12.41	33.0	-20.6	
1857.50	19.50	H	0.9	8.0	26.61	33.0	-6.4	
Mid Ch								
1880.00	4.10	V	0.9	8.0	11.21	33.0	-21.8	
1880.00	18.10	H	0.9	8.0	25.21	33.0	-7.8	
High Ch								
1902.50	4.60	V	0.9	8.0	11.71	33.0	-21.3	
1902.50	19.50	H	0.9	8.0	26.61	33.0	-6.4	

UL VERIFICATION SERVICES INC. FORM NO: CCSUP4701H
47173 BENICIA STREET, FREMONT, CA 94538, USA TEL: (510) 771-1000 FAX: (510) 661-0888
This report shall not be reproduced except in full, without the written approval of UL Verification Services Inc.

Band

LTE2

15MHz

QPSK

High Frequency Substitution Measurement
UL Verification Services, Inc.

Company: LG
Project #: 15I21442
Date: 8/4/2015
Test Engineer: Jude Semana
Configuration: EUT Only
Location: Chamber C
Mode: LTE_QPSK Band 2 Fundamentals, 15MHz Bandwidth

Test Equipment:
Receiving: Horn T345 and Chamber B SMA Cables
Substitution: Horn T59 Substitution, 4ft SMA Cable Warehouse

f MHz	SG reading (dBm)	Ant. Pol. (H/V)	Cable Loss (dB)	Antenna Gain (dBi)	EIRP (dBm)	Limit (dBm)	Delta (dB)	Notes
Low Ch								
1857.50	6.30	V	0.9	8.0	13.41	33.0	-19.6	
1857.50	20.50	H	0.9	8.0	27.61	33.0	-5.4	
Mid Ch								
1880.00	5.10	V	0.9	8.0	12.21	33.0	-20.8	
1880.00	19.06	H	0.9	8.0	26.17	33.0	-6.8	
High Ch								
1902.50	5.60	V	0.9	8.0	12.71	33.0	-20.3	
1902.50	20.50	H	0.9	8.0	27.61	33.0	-5.4	

This report shall not be reproduced except in full, without the written approval of UL Verification Services Inc.

Band

LTE2

10MHz

16QAM

High Frequency Substitution Measurement
UL Verification Services, Inc.

Company: LG
Project #: 15I21442
Date: 8/4/2015
Test Engineer: Jude Semana
Configuration: EUT Only
Location: Chamber C
Mode: LTE_16QAM Band 2 Fundamentals, 10MHz Bandwidth

Test Equipment:
Receiving: Horn T345 and Chamber B SMA Cables
Substitution: Horn T59 Substitution, 4ft SMA Cable Warehouse

f MHz	SG reading (dBm)	Ant. Pol. (H/V)	Cable Loss (dB)	Antenna Gain (dBi)	EIRP (dBm)	Limit (dBm)	Delta (dB)	Notes
Low Ch								
1855.00	4.90	V	0.9	8.0	12.01	33.0	-21.0	
1855.00	19.40	H	0.9	8.0	26.51	33.0	-6.5	
Mid Ch								
1880.00	4.00	V	0.9	8.0	11.11	33.0	-21.9	
1880.00	18.00	H	0.9	8.0	25.11	33.0	-7.9	
High Ch								
1905.00	4.50	V	0.9	8.0	11.61	33.0	-21.4	
1905.00	19.40	H	0.9	8.0	26.51	33.0	-6.5	

UL VERIFICATION SERVICES INC. FORM NO: CCSUP4701H
47173 BENICIA STREET, FREMONT, CA 94538, USA TEL: (510) 771-1000 FAX: (510) 661-0888
This report shall not be reproduced except in full, without the written approval of UL Verification Services Inc.

Band

LTE2

10MHz

QPSK

High Frequency Substitution Measurement
UL Verification Services, Inc.

Company: LG
Project #: 15I21442
Date: 8/4/2015
Test Engineer: Jude Semana
Configuration: EUT Only
Location: Chamber C
Mode: LTE_QPSK Band 2 Fundamentals, 10MHz Bandwidth

Test Equpment:
Receiving: Horn T345 and Chamber B SMA Cables
Substitution: Horn T59 Substitution, 4ft SMA Cable Warehouse

f MHz	SG reading (dBm)	Ant. Pol. (H/V)	Cable Loss (dB)	Antenna Gain (dBi)	EIRP (dBm)	Limit (dBm)	Delta (dB)	Notes
Low Ch								
1855.00	5.90	V	0.9	8.0	13.01	33.0	-20.0	
1855.00	20.40	H	0.9	8.0	27.51	33.0	-5.5	
Mid Ch								
1880.00	5.00	V	0.9	8.0	12.11	33.0	-20.9	
1880.00	19.00	H	0.9	8.0	26.11	33.0	-6.9	
High Ch								
1905.00	5.50	V	0.9	8.0	12.61	33.0	-20.4	
1905.00	20.40	H	0.9	8.0	27.51	33.0	-5.5	

This report shall not be reproduced except in full, without the written approval of UL Verification Services Inc.

Band

LTE2

5MHz

16QAM

High Frequency Substitution Measurement
UL Verification Services, Inc.

Company: LG
Project #: 15I21442
Date: 8/4/2015
Test Engineer: Jude Semana
Configuration: EUT Only
Location: Chamber C
Mode: LTE_16QAM Band 2 Fundamentals, 5MHz Bandwidth

Test Equipment:
Receiving: Horn T345 and Chamber B SMA Cables
Substitution: Horn T59 Substitution, 4ft SMA Cable Warehouse

f MHz	SG reading (dBm)	Ant. Pol. (H/V)	Cable Loss (dB)	Antenna Gain (dBi)	EIRP (dBm)	Limit (dBm)	Delta (dB)	Notes
Low Ch								
1852.50	6.00	V	0.9	8.0	13.11	33.0	-19.9	
1852.50	20.80	H	0.9	8.0	27.91	33.0	-5.1	
Mid Ch								
1880.00	3.70	V	0.9	8.0	10.81	33.0	-22.2	
1880.00	17.70	H	0.9	8.0	24.81	33.0	-8.2	
High Ch								
1907.50	4.60	V	0.9	8.0	11.71	33.0	-21.3	
1907.50	19.60	H	0.9	8.0	26.71	33.0	-6.3	

UL VERIFICATION SERVICES INC. FORM NO: CCSUP4701H
47173 BENICIA STREET, FREMONT, CA 94538, USA TEL: (510) 771-1000 FAX: (510) 661-0888
This report shall not be reproduced except in full, without the written approval of UL Verification Services Inc.

Band

LTE2

5MHz

QPSK

High Frequency Substitution Measurement
UL Verification Services, Inc.

Company: LG
Project #: 15I21442
Date: 8/4/2015
Test Engineer: Jude Semana
Configuration: EUT Only
Location: Chamber C
Mode: LTE_QPSK Band 2 Fundamentals, 5MHz Bandwidth

Test Equpment:
Receiving: Horn T345 and Chamber B SMA Cables
Substitution: Horn T59 Substitution, 4ft SMA Cable Warehouse

f MHz	SG reading (dBm)	Ant. Pol. (H/V)	Cable Loss (dB)	Antenna Gain (dBi)	EIRP (dBm)	Limit (dBm)	Delta (dB)	Notes
Low Ch								
1852.50	7.00	V	0.9	8.0	14.11	33.0	-18.9	
1852.50	21.80	H	0.9	8.0	28.91	33.0	-4.1	
Mid Ch								
1880.00	4.70	V	0.9	8.0	11.81	33.0	-21.2	
1880.00	18.70	H	0.9	8.0	25.81	33.0	-7.2	
High Ch								
1907.50	5.60	V	0.9	8.0	12.71	33.0	-20.3	
1907.50	20.60	H	0.9	8.0	27.71	33.0	-5.3	

This report shall not be reproduced except in full, without the written approval of UL Verification Services Inc.

Band

LTE2

3MHz

16QAM

High Frequency Substitution Measurement
UL Verification Services, Inc.

Company: LG
Project #: 15I21442
Date: 8/4/2015
Test Engineer: Jude Semana
Configuration: EUT Only
Location: Chamber C
Mode: LTE_16QAM Band 2 Fundamentals, 3MHz Bandwidth

Test Equpment:
Receiving: Horn T345 and Chamber B SMA Cables
Substitution: Horn T59 Substitution, 4ft SMA Cable Warehouse

f MHz	SG reading (dBm)	Ant. Pol. (H/V)	Cable Loss (dB)	Antenna Gain (dBi)	EIRP (dBm)	Limit (dBm)	Delta (dB)	Notes
Low Ch								
1851.50	3.90	V	0.9	8.0	11.01	33.0	-22.0	
1851.50	20.00	H	0.9	8.0	27.11	33.0	-5.9	
Mid Ch								
1880.00	4.10	V	0.9	8.0	11.21	33.0	-21.8	
1880.00	18.00	H	0.9	8.0	25.11	33.0	-7.9	
High Ch								
1908.50	4.00	V	0.9	8.0	11.11	33.0	-21.9	
1908.50	18.90	H	0.9	8.0	26.01	33.0	-7.0	

UL VERIFICATION SERVICES INC. FORM NO: CCSUP4701H
47173 BENICIA STREET, FREMONT, CA 94538, USA TEL: (510) 771-1000 FAX: (510) 661-0888
This report shall not be reproduced except in full, without the written approval of UL Verification Services Inc.

Band

LTE2

3MHz

QPSK

High Frequency Substitution Measurement
UL Verification Services, Inc.

Company: LG
Project #: 15I21442
Date: 8/4/2015
Test Engineer: Jude Semana
Configuration: EUT Only
Location: Chamber C
Mode: LTE_QPSK Band 2 Fundamentals, 3MHz Bandwidth

Test Equpment:
Receiving: Horn T345 and Chamber B SMA Cables
Substitution: Horn T59 Substitution, 4ft SMA Cable Warehouse

f MHz	SG reading (dBm)	Ant. Pol. (H/V)	Cable Loss (dB)	Antenna Gain (dBi)	EIRP (dBm)	Limit (dBm)	Delta (dB)	Notes
Low Ch								
1851.50	6.10	V	0.9	8.0	13.21	33.0	-19.8	
1851.50	20.90	H	0.9	8.0	28.01	33.0	-5.0	
Mid Ch								
1880.00	4.90	V	0.9	8.0	12.01	33.0	-21.0	
1880.00	18.90	H	0.9	8.0	26.01	33.0	-7.0	
High Ch								
1908.50	4.90	V	0.9	8.0	12.01	33.0	-21.0	
1908.50	19.90	H	0.9	8.0	27.01	33.0	-6.0	

This report shall not be reproduced except in full, without the written approval of UL Verification Services Inc.

Band

LTE2

1.4MHz

16QAM

High Frequency Substitution Measurement
UL Verification Services, Inc.

Company: LG
Project #: 15I21442
Date: 8/4/2015
Test Engineer: Jude Semana
Configuration: EUT Only
Location: Chamber C
Mode: LTE_16QAM Band 2 Fundamentals, 1.4MHz Bandwidth

Test Equpment:
Receiving: Horn T345 and Chamber B SMA Cables
Substitution: Horn T59 Substitution, 4ft SMA Cable Warehouse

f MHz	SG reading (dBm)	Ant. Pol. (H/V)	Cable Loss (dB)	Antenna Gain (dBi)	EIRP (dBm)	Limit (dBm)	Delta (dB)	Notes
Low Ch								
1850.70	4.40	V	0.9	8.0	11.51	33.0	-21.5	
1850.70	19.90	H	0.9	8.0	27.01	33.0	-6.0	
Mid Ch								
1880.00	3.90	V	0.9	8.0	11.01	33.0	-22.0	
1880.00	17.90	H	0.9	8.0	25.01	33.0	-8.0	
High Ch								
1909.30	6.90	V	0.9	8.0	14.01	33.0	-19.0	
1909.30	20.04	H	0.9	8.0	27.15	33.0	-5.9	

This report shall not be reproduced except in full, without the written approval of UL Verification Services Inc.

Band

LTE2

1.4MHz

QPSK

High Frequency Substitution Measurement
UL Verification Services, Inc.

Company: LG
Project #: 15I21442
Date: 8/4/2015
Test Engineer: Jude Semana
Configuration: EUT Only
Location: Chamber C
Mode: LTE_QPSK Band 2 Fundamentals, 1.4MHz Bandwidth

Test Equpment:
Receiving: Horn T345 and Chamber B SMA Cables
Substitution: Horn T59 Substitution, 4ft SMA Cable Warehouse

f MHz	SG reading (dBm)	Ant. Pol. (H/V)	Cable Loss (dB)	Antenna Gain (dBi)	EIRP (dBm)	Limit (dBm)	Delta (dB)	Notes
Low Ch								
1850.70	6.10	V	0.9	8.0	13.21	33.0	-19.8	
1850.70	20.90	H	0.9	8.0	28.01	33.0	-5.0	
Mid Ch								
1880.00	5.10	V	0.9	8.0	12.21	33.0	-20.8	
1880.00	18.90	H	0.9	8.0	26.01	33.0	-7.0	
High Ch								
1909.30	4.90	V	0.9	8.0	12.01	33.0	-21.0	
1909.30	19.90	H	0.9	8.0	27.01	33.0	-6.0	

UL VERIFICATION SERVICES INC. FORM NO: CCSUP4701H
47173 BENICIA STREET, FREMONT, CA 94538, USA TEL: (510) 771-1000 FAX: (510) 661-0888
This report shall not be reproduced except in full, without the written approval of UL Verification Services Inc.

LTE Band 4

Band

LTE4

20MHz

16QAM

High Frequency Substitution Measurement
UL Verification Services, Inc.

Company: LG
Project #: 15I21442
Date: 8/4/2015
Test Engineer: G. Escano
Configuration: EUT Only
Location: Chamber A
Mode: LTE_16QAM Band 4 Fundamentals, 20MHz Bandwidth

Test Equipment:
Receiving: Horn T136, and Chamber A SMA Cables
Substitution: Horn T60, 6ft SMA Cable (SN # 506392) Warehouse

f MHz	SG reading (dBm)	Ant. Pol. (H/V)	Cable Loss (dB)	Antenna Gain (dBi)	EIRP (dBm)	Limit (dBm)	Delta (dB)	Notes
Low Ch								
1720.00	8.16	V	0.9	8.2	15.48	30.0	-14.5	
1720.00	17.90	H	0.9	8.2	25.22	30.0	-4.8	
Mid Ch								
1732.50	5.56	V	0.9	8.2	12.83	30.0	-17.2	
1732.50	16.77	H	0.9	8.2	24.04	30.0	-6.0	
High Ch								
1745.00	5.19	V	0.9	8.1	12.41	30.0	-17.6	
1745.00	16.73	H	0.9	8.1	23.95	30.0	-6.0	

This report shall not be reproduced except in full, without the written approval of UL Verification Services Inc.

Band

LTE4

20MHz

QPSK

High Frequency Substitution Measurement
UL Verification Services, Inc.

Company: LG
Project #: 15I21442
Date: 8/4/2015
Test Engineer: G. Escano
Configuration: EUT Only
Location: Chamber A
Mode: LTE_QPSK Band 4 Fundamentals, 20MHz Bandwidth

Test Equpment:
Receiving: Horn T136, and Chamber A SMA Cables
Substitution: Horn T60, 6ft SMA Cable (SN # 506392) Warehouse

f MHz	SG reading (dBm)	Ant. Pol. (H/V)	Cable Loss (dB)	Antenna Gain (dBi)	EIRP (dBm)	Limit (dBm)	Delta (dB)	Notes
Low Ch								
1720.00	9.52	V	0.9	8.2	16.84	30.0	-13.2	
1720.00	19.25	H	0.9	8.2	26.57	30.0	-3.4	
Mid Ch								
1732.50	6.23	V	0.9	8.2	13.50	30.0	-16.5	
1732.50	18.41	H	0.9	8.2	25.68	30.0	-4.3	
High Ch								
1745.00	6.63	V	0.9	8.1	13.85	30.0	-16.1	
1745.00	18.04	H	0.9	8.1	25.26	30.0	-4.7	

UL VERIFICATION SERVICES INC. FORM NO: CCSUP4701H
47173 BENICIA STREET, FREMONT, CA 94538, USA TEL: (510) 771-1000 FAX: (510) 661-0888
This report shall not be reproduced except in full, without the written approval of UL Verification Services Inc.

Band

LTE4

15MHz

16QAM

High Frequency Substitution Measurement
UL Verification Services, Inc.

Company: LG
Project #: 15I21442
Date: 8/4/2015
Test Engineer: J. Wu
Configuration: EUT Only
Location: Chamber A
Mode: LTE_16QAM Band 4 Fundamentals, 15MHz Bandwidth

Test Equipment:
Receiving: Horn T136, and Chamber A SMA Cables
Substitution: Horn T60, 6ft SMA Cable (SN # 506392) Warehouse

f MHz	SG reading (dBm)	Ant. Pol. (H/V)	Cable Loss (dB)	Antenna Gain (dBi)	EIRP (dBm)	Limit (dBm)	Delta (dB)	Notes
Low Ch								
1717.50	15.73	V	0.9	8.2	23.05	30.0	-6.9	
1717.50	18.71	H	0.9	8.2	26.04	30.0	-4.0	
Mid Ch								
1732.50	16.76	V	0.9	8.2	24.03	30.0	-6.0	
1732.50	17.48	H	0.9	8.2	24.75	30.0	-5.2	
High Ch								
1747.50	14.76	V	0.9	8.1	21.98	30.0	-8.0	
1747.50	18.43	H	0.9	8.1	25.65	30.0	-4.4	

UL VERIFICATION SERVICES INC. FORM NO: CCSUP4701H
47173 BENICIA STREET, FREMONT, CA 94538, USA TEL: (510) 771-1000 FAX: (510) 661-0888
This report shall not be reproduced except in full, without the written approval of UL Verification Services Inc.

Band

LTE4

15MHz

QPSK

High Frequency Substitution Measurement
UL Verification Services, Inc.

Company: LG
Project #: 15I21442
Date: 8/4/2015
Test Engineer: J. Wu
Configuration: EUT Only
Location: Chamber A
Mode: LTE_QPSK Band 4 Fundamentals, 15MHz Bandwidth

Test Equpment:
Receiving: Horn T136, and Chamber A SMA Cables
Substitution: Horn T60, 6ft SMA Cable (SN # 506392) Warehouse

f MHz	SG reading (dBm)	Ant. Pol. (H/V)	Cable Loss (dB)	Antenna Gain (dBi)	EIRP (dBm)	Limit (dBm)	Delta (dB)	Notes
Low Ch								
1717.50	16.89	V	0.9	8.2	24.21	30.0	-5.8	
1717.50	19.33	H	0.9	8.2	26.66	30.0	-3.3	
Mid Ch								
1732.50	17.53	V	0.9	8.2	24.80	30.0	-5.2	
1732.50	18.67	H	0.9	8.2	25.94	30.0	-4.1	
High Ch								
1747.50	15.77	V	0.9	8.1	22.99	30.0	-7.0	
1747.50	19.65	H	0.9	8.1	26.87	30.0	-3.1	

UL VERIFICATION SERVICES INC. FORM NO: CCSUP4701H
47173 BENICIA STREET, FREMONT, CA 94538, USA TEL: (510) 771-1000 FAX: (510) 661-0888
This report shall not be reproduced except in full, without the written approval of UL Verification Services Inc.

Band

LTE4

10MHz

16QAM

High Frequency Substitution Measurement
UL Verification Services, Inc.

Company: LG
Project #: 15I21442
Date: 8/4/2015
Test Engineer: J. Wu
Configuration: EUT Only
Location: Chamber A
Mode: LTE_16QAM Band 4 Fundamentals, 10MHz Bandwidth

Test Equipment:
Receiving: Horn T136, and Chamber A SMA Cables
Substitution: Horn T60, 6ft SMA Cable (SN # 506392) Warehouse

f MHz	SG reading (dBm)	Ant. Pol. (H/V)	Cable Loss (dB)	Antenna Gain (dBi)	EIRP (dBm)	Limit (dBm)	Delta (dB)	Notes
Low Ch								
1715.00	7.36	V	0.9	8.2	14.69	30.0	-15.3	
1715.00	17.98	H	0.9	8.2	25.31	30.0	-4.7	
Mid Ch								
1732.50	6.38	V	0.9	8.2	13.65	30.0	-16.4	
1732.50	18.76	H	0.9	8.2	26.03	30.0	-4.0	
High Ch								
1750.00	15.04	V	0.9	8.1	22.25	30.0	-7.8	
1750.00	18.22	H	0.9	8.1	25.42	30.0	-4.6	

UL VERIFICATION SERVICES INC. FORM NO: CCSUP4701H
47173 BENICIA STREET, FREMONT, CA 94538, USA TEL: (510) 771-1000 FAX: (510) 661-0888
This report shall not be reproduced except in full, without the written approval of UL Verification Services Inc.

Band

LTE4

10MHz

QPSK

High Frequency Substitution Measurement
UL Verification Services, Inc.

Company: LG
Project #: 15I21442
Date: 8/4/2015
Test Engineer: J. Wu
Configuration: EUT Only
Location: Chamber A
Mode: LTE_QPSK Band 4 Fundamentals, 10MHz Bandwidth

Test Equipment:
Receiving: Horn T136, and Chamber A SMA Cables
Substitution: Horn T60, 6ft SMA Cable (SN # 506392) Warehouse

f MHz	SG reading (dBm)	Ant. Pol. (H/V)	Cable Loss (dB)	Antenna Gain (dBi)	EIRP (dBm)	Limit (dBm)	Delta (dB)	Notes
Low Ch								
1715.00	8.70	V	0.9	8.2	16.03	30.0	-14.0	
1715.00	19.38	H	0.9	8.2	26.71	30.0	-3.3	
Mid Ch								
1732.50	7.67	V	0.9	8.2	14.94	30.0	-15.1	
1732.50	19.14	H	0.9	8.2	26.41	30.0	-3.6	
High Ch								
1750.00	15.39	V	0.9	8.1	22.60	30.0	-7.4	
1750.00	19.45	H	0.9	8.1	26.65	30.0	-3.3	

UL VERIFICATION SERVICES INC. FORM NO: CCSUP4701H
47173 BENICIA STREET, FREMONT, CA 94538, USA TEL: (510) 771-1000 FAX: (510) 661-0888
This report shall not be reproduced except in full, without the written approval of UL Verification Services Inc.

Band

LTE4

5MHz

16QAM

High Frequency Substitution Measurement
UL Verification Services, Inc.

Company: LG
Project #: 15I21442
Date: 8/5/2015
Test Engineer: J. Wu
Configuration: EUT Only
Location: Chamber A
Mode: LTE_16QAM Band 4 Fundamentals, 5MHz Bandwidth

Test Equipment:
Receiving: Horn T136, and Chamber A SMA Cables
Substitution: Horn T60, 6ft SMA Cable (SN # 506392) Warehouse

f MHz	SG reading (dBm)	Ant. Pol. (H/V)	Cable Loss (dB)	Antenna Gain (dBi)	EIRP (dBm)	Limit (dBm)	Delta (dB)	Notes
Low Ch								
1712.50	5.78	V	0.9	8.2	13.13	30.0	-16.9	
1712.50	17.76	H	0.9	8.2	25.10	30.0	-4.9	
Mid Ch								
1732.50	6.80	V	0.9	8.2	14.07	30.0	-15.9	
1732.50	15.80	H	0.9	8.2	23.07	30.0	-6.9	
High Ch								
1752.50	14.73	V	0.9	8.1	21.93	30.0	-8.1	
1752.50	15.84	H	0.9	8.1	23.04	30.0	-7.0	

UL VERIFICATION SERVICES INC. FORM NO: CCSUP4701H
47173 BENICIA STREET, FREMONT, CA 94538, USA TEL: (510) 771-1000 FAX: (510) 661-0888
This report shall not be reproduced except in full, without the written approval of UL Verification Services Inc.

Band

LTE4

5MHz

QPSK

High Frequency Substitution Measurement
UL Verification Services, Inc.

Company: LG
Project #: 15I21442
Date: 8/4/2015
Test Engineer: J. Wu
Configuration: EUT Only
Location: Chamber A
Mode: LTE_QPSK Band 4 Fundamentals, 5MHz Bandwidth

Test Equpment:
Receiving: Horn T136, and Chamber A SMA Cables
Substitution: Horn T60, 6ft SMA Cable (SN # 5069392) Warehouse

f MHz	SG reading (dBm)	Ant. Pol. (H/V)	Cable Loss (dB)	Antenna Gain (dBi)	EIRP (dBm)	Limit (dBm)	Delta (dB)	Notes
Low Ch								
1712.50	6.25	V	0.9	8.2	13.60	30.0	-16.4	
1712.50	19.51	H	0.9	8.2	26.85	30.0	-3.1	
Mid Ch								
1732.50	8.38	V	0.9	8.2	15.65	30.0	-14.4	
1732.50	18.11	H	0.9	8.2	25.38	30.0	-4.6	
High Ch								
1752.50	15.82	V	0.9	8.1	23.02	30.0	-7.0	
1752.50	16.98	H	0.9	8.1	24.18	30.0	-5.8	

UL VERIFICATION SERVICES INC. FORM NO: CCSUP4701H
47173 BENICIA STREET, FREMONT, CA 94538, USA TEL: (510) 771-1000 FAX: (510) 661-0888
This report shall not be reproduced except in full, without the written approval of UL Verification Services Inc.

Band

LTE4

3MHz

16QAM

High Frequency Substitution Measurement
UL Verification Services, Inc.

Company: LG
Project #: 15I21442
Date: 8/5/2015
Test Engineer: G. Escano
Configuration: EUT Only
Location: Chamber A
Mode: LTE_16QAM Band 4 Fundamentals, 3MHz Bandwidth

Test Equipment:
Receiving: Horn T136, and Chamber A SMA Cables
Substitution: Horn T60, 6ft SMA Cable (SN # 506392) Warehouse

f MHz	SG reading (dBm)	Ant. Pol. (H/V)	Cable Loss (dB)	Antenna Gain (dBi)	EIRP (dBm)	Limit (dBm)	Delta (dB)	Notes
Low Ch								
1711.50	5.72	V	0.9	8.2	13.07	30.0	-16.9	
1711.50	17.47	H	0.9	8.2	24.81	30.0	-5.2	
Mid Ch								
1732.50	7.10	V	0.9	8.2	14.37	30.0	-15.6	
1732.50	17.20	H	0.9	8.2	24.47	30.0	-5.5	
High Ch								
1753.50	14.64	V	0.9	8.1	21.84	30.0	-8.2	
1753.50	16.56	H	0.9	8.1	23.76	30.0	-6.2	

UL VERIFICATION SERVICES INC. FORM NO: CCSUP4701H
47173 BENICIA STREET, FREMONT, CA 94538, USA TEL: (510) 771-1000 FAX: (510) 661-0888
This report shall not be reproduced except in full, without the written approval of UL Verification Services Inc.

Band

LTE4

3MHz

QPSK

High Frequency Substitution Measurement
UL Verification Services, Inc.

Company: LG
Project #: 15I21442
Date: 8/5/2015
Test Engineer: G. Escano
Configuration: EUT Only
Location: Chamber A
Mode: LTE_QPSK Band 4 Fundamentals, 3MHz Bandwidth

Test Equpment:
Receiving: Horn T136, and Chamber A SMA Cables
Substitution: Horn T60, 6ft SMA Cable (SN # 506392) Warehouse

f MHz	SG reading (dBm)	Ant. Pol. (H/V)	Cable Loss (dB)	Antenna Gain (dBi)	EIRP (dBm)	Limit (dBm)	Delta (dB)	Notes
Low Ch								
1711.50	6.82	V	0.9	8.2	14.17	30.0	-15.8	
1711.50	18.98	H	0.9	8.2	26.32	30.0	-3.7	
Mid Ch								
1732.50	8.15	V	0.9	8.2	15.42	30.0	-14.6	
1732.50	18.32	H	0.9	8.2	25.59	30.0	-4.4	
High Ch								
1753.50	15.50	V	0.9	8.1	22.70	30.0	-7.3	
1753.50	17.91	H	0.9	8.1	25.11	30.0	-4.9	

UL VERIFICATION SERVICES INC. FORM NO: CCSUP4701H
47173 BENICIA STREET, FREMONT, CA 94538, USA TEL: (510) 771-1000 FAX: (510) 661-0888
This report shall not be reproduced except in full, without the written approval of UL Verification Services Inc.

Band

LTE4

1.4MHz

16QAM

High Frequency Substitution Measurement
UL Verification Services, Inc.

Company: LG
Project #: 15I21442
Date: 8/4/2015
Test Engineer: J. WU
Configuration: EUT Only
Location: Chamber A
Mode: LTE_16QAM Band 4 Fundamentals, 1.4MHz Bandwidth

Test Equipment:
Receiving: Horn T136, and Chamber A SMA Cables
Substitution: Horn T60, 6ft SMA Cable (SN # 506392) Warehouse

f MHz	SG reading (dBm)	Ant. Pol. (H/V)	Cable Loss (dB)	Antenna Gain (dBi)	EIRP (dBm)	Limit (dBm)	Delta (dB)	Notes
Low Ch								
1710.70	8.29	V	0.9	8.3	15.64	30.0	-14.4	
1710.70	17.69	H	0.9	8.3	25.04	30.0	-5.0	
Mid Ch								
1732.50	5.53	V	0.9	8.2	12.80	30.0	-17.2	
1732.50	17.45	H	0.9	8.2	24.72	30.0	-5.3	
High Ch								
1754.30	14.81	V	0.9	8.1	22.00	30.0	-8.0	
1754.30	17.13	H	0.9	8.1	24.32	30.0	-5.7	

UL VERIFICATION SERVICES INC. FORM NO: CCSUP4701H
47173 BENICIA STREET, FREMONT, CA 94538, USA TEL: (510) 771-1000 FAX: (510) 661-0888
This report shall not be reproduced except in full, without the written approval of UL Verification Services Inc.

Band

LTE4

1.4MHz

QPSK

High Frequency Substitution Measurement
UL Verification Services, Inc.

Company: LG
Project #: 15I21442
Date: 8/4/2015
Test Engineer: J. Wu
Configuration: EUT Only
Location: Chamber A
Mode: LTE_QPSK Band 4 Fundamentals, 1.4MHz Bandwidth

Test Equpment:
Receiving: Horn T136, and Chamber A SMA Cables
Substitution: Horn T60, 6ft SMA Cable (SN # 506392) Warehouse

f MHz	SG reading (dBm)	Ant. Pol. (H/V)	Cable Loss (dB)	Antenna Gain (dBi)	EIRP (dBm)	Limit (dBm)	Delta (dB)	Notes
Low Ch								
1710.70	9.78	V	0.9	8.3	17.13	30.0	-12.9	
1710.70	19.31	H	0.9	8.3	26.66	30.0	-3.3	
Mid Ch								
1732.50	6.77	V	0.9	8.2	14.04	30.0	-16.0	
1732.50	18.55	H	0.9	8.2	25.82	30.0	-4.2	
High Ch								
1754.30	15.87	V	0.9	8.1	23.06	30.0	-6.9	
1754.30	18.19	H	0.9	8.1	25.38	30.0	-4.6	

UL VERIFICATION SERVICES INC. FORM NO: CCSUP4701H
47173 BENICIA STREET, FREMONT, CA 94538, USA TEL: (510) 771-1000 FAX: (510) 661-0888
This report shall not be reproduced except in full, without the written approval of UL Verification Services Inc.

LTE Band 5

Band

LTE5

10MHz

16QAM

High Frequency Substitution Measurement
UL Verification Services, Inc. Chamber C

Company: LG
Project #: 15I21442
Date: 8/5/2015
Test Engineer: Jude Semana
Configuration: EUT Only
Mode: LTE_16QAM Band 5 Fundamentals, 10MHz Bandwidth

Test Equipment:
Receiving: Sunol T185, and 3m Chamber C N-type Cable
Substitution: Dipole T273, 4ft SMA Cable Warehouse.

f MHz	SG reading (dBm)	Ant. Pol. (H/V)	Cable Loss (dB)	Antenna Gain (dBd)	ERP (dBm)	Limit (dBm)	Margin (dB)	Notes
Low Ch								
829.00	14.60	V	0.9	0.0	13.70	38.5	-24.7	
829.00	20.90	H	0.9	0.0	20.00	38.5	-18.4	
Mid Ch								
836.50	14.32	V	0.9	0.0	13.42	38.5	-25.0	
836.50	21.03	H	0.9	0.0	20.13	38.5	-18.3	
High Ch								
844.00	14.20	V	0.9	0.0	13.30	38.5	-25.1	
844.00	20.96	H	0.9	0.0	20.06	38.5	-18.4	

Rev. 3.17.11
Note: For Band 13/17 ERP limit is 34.77dBm; For Band 26 limit is 50dBm

UL VERIFICATION SERVICES INC. FORM NO: CCSUP4701H
47173 BENICIA STREET, FREMONT, CA 94538, USA TEL: (510) 771-1000 FAX: (510) 661-0888

This report shall not be reproduced except in full, without the written approval of UL Verification Services Inc.

Band

LTE5

10MHz

QPSK

High Frequency Substitution Measurement
UL Verification Services, Inc. Chamber C

Company: LG
Project #: 15I21442
Date: 8/5/2015
Test Engineer: Jude Semana
Configuration: EUT Only
Mode: LTE_QPSK Band 5 Fundamentals, 10MHz Bandwidth

Test Equipment:
Receiving: Sunol T185, and 3m Chamber C N-type Cable
Substitution: Dipole T273, 4ft SMA Cable Warehouse.

f MHz	SG reading (dBm)	Ant. Pol. (H/V)	Cable Loss (dB)	Antenna Gain (dBd)	ERP (dBm)	Limit (dBm)	Margin (dB)	Notes
Low Ch								
829.00	14.70	V	0.9	0.0	13.80	38.5	-24.6	
829.00	21.90	H	0.9	0.0	21.00	38.5	-17.4	
Mid Ch								
836.50	14.42	V	0.9	0.0	13.52	38.5	-24.9	
836.50	21.13	H	0.9	0.0	20.23	38.5	-18.2	
High Ch								
844.00	14.30	V	0.9	0.0	13.40	38.5	-25.0	
844.00	20.86	H	0.9	0.0	19.96	38.5	-18.5	

Rev. 3.17.11
Note: For Band 13/17 ERP limit is 34.77dBm; For Band 26 limit is 50dBm

UL VERIFICATION SERVICES INC. FORM NO: CCSUP4701H
47173 BENICIA STREET, FREMONT, CA 94538, USA TEL: (510) 771-1000 FAX: (510) 661-0888
This report shall not be reproduced except in full, without the written approval of UL Verification Services Inc.

Band

LTE5

5MHz

16QAM

High Frequency Substitution Measurement
UL Verification Services, Inc. Chamber C

Company: LG
Project #: 15I21442
Date: 8/5/2015
Test Engineer: Jude Semana
Configuration: EUT Only
Mode: LTE_16QAM Band 5 Fundamentals, 5MHz Bandwidth

Test Equipment:
Receiving: Sunol T185, and 3m Chamber C N-type Cable
Substitution: Dipole T273, 4ft SMA Cable Warehouse.

f MHz	SG reading (dBm)	Ant. Pol. (H/V)	Cable Loss (dB)	Antenna Gain (dBd)	ERP (dBm)	Limit (dBm)	Margin (dB)	Notes
Low Ch								
826.50	14.40	V	0.9	0.0	13.50	38.5	-24.9	
826.50	20.70	H	0.9	0.0	19.80	38.5	-18.6	
Mid Ch								
836.50	14.12	V	0.9	0.0	13.22	38.5	-25.2	
836.50	20.83	H	0.9	0.0	19.93	38.5	-18.5	
High Ch								
846.50	14.10	V	0.9	0.0	13.20	38.5	-25.2	
846.50	20.56	H	0.9	0.0	19.66	38.5	-18.8	

Rev. 3.17.11
Note: For Band 13/17 ERP limit is 34.77dBm; For Band 26 limit is 50dBm

UL VERIFICATION SERVICES INC. FORM NO: CCSUP4701H
47173 BENICIA STREET, FREMONT, CA 94538, USA TEL: (510) 771-1000 FAX: (510) 661-0888
This report shall not be reproduced except in full, without the written approval of UL Verification Services Inc.

Band

LTE5

5MHz

QPSK

High Frequency Substitution Measurement
UL Verification Services, Inc. Chamber C

Company: LG
Project #: 15I21442
Date: 8/5/2015
Test Engineer: Jude Semana
Configuration: EUT Only
Mode: LTE_QPSK Band 5 Fundamentals, 5MHz Bandwidth

Test Equipment:
Receiving: Sunol T185, and 3m Chamber C N-type Cable
Substitution: Dipole T273, 4ft SMA Cable Warehouse.

f MHz	SG reading (dBm)	Ant. Pol. (H/V)	Cable Loss (dB)	Antenna Gain (dBd)	ERP (dBm)	Limit (dBm)	Margin (dB)	Notes
Low Ch								
826.50	14.40	V	0.9	0.0	13.50	38.5	-24.9	
826.50	21.80	H	0.9	0.0	20.90	38.5	-17.5	
Mid Ch								
836.50	14.22	V	0.9	0.0	13.32	38.5	-25.1	
836.50	20.93	H	0.9	0.0	20.03	38.5	-18.4	
High Ch								
846.50	14.00	V	0.9	0.0	13.10	38.5	-25.3	
846.50	20.66	H	0.9	0.0	19.76	38.5	-18.7	

Rev. 3.17.11
Note: For Band 13/17 ERP limit is 34.77dBm; For Band 26 limit is 50dBm

UL VERIFICATION SERVICES INC. FORM NO: CCSUP4701H
47173 BENICIA STREET, FREMONT, CA 94538, USA TEL: (510) 771-1000 FAX: (510) 661-0888
This report shall not be reproduced except in full, without the written approval of UL Verification Services Inc.

Band

LTE5

3MHz

16QAM

High Frequency Substitution Measurement
UL Verification Services, Inc. Chamber C

Company: LG
Project #: 15I21442
Date: 8/5/2015
Test Engineer: Jude Semana
Configuration: EUT Only
Mode: LTE_16QAM Band 5 Fundamentals, 3MHz Bandwidth

Test Equipment:
Receiving: Sunol T185, and 3m Chamber C N-type Cable
Substitution: Dipole T273, 4ft SMA Cable Warehouse.

f MHz	SG reading (dBm)	Ant. Pol. (H/V)	Cable Loss (dB)	Antenna Gain (dBd)	ERP (dBm)	Limit (dBm)	Margin (dB)	Notes
Low Ch								
825.50	14.40	V	0.9	0.0	13.50	38.5	-24.9	
825.50	20.80	H	0.9	0.0	19.90	38.5	-18.5	
Mid Ch								
836.50	14.02	V	0.9	0.0	13.12	38.5	-25.3	
836.50	20.83	H	0.9	0.0	19.93	38.5	-18.5	
High Ch								
847.50	13.80	V	0.9	0.0	12.90	38.5	-25.5	
847.50	20.46	H	0.9	0.0	19.56	38.5	-18.9	

Rev. 3.17.11
Note: For Band 13/17 ERP limit is 34.77dBm; For Band 26 limit is 50dBm

UL VERIFICATION SERVICES INC. FORM NO: CCSUP4701H
47173 BENICIA STREET, FREMONT, CA 94538, USA TEL: (510) 771-1000 FAX: (510) 661-0888
This report shall not be reproduced except in full, without the written approval of UL Verification Services Inc.

Band

LTE5

3MHz

QPSK

High Frequency Substitution Measurement
UL Verification Services, Inc. Chamber C

Company: LG
Project #: 15I21442
Date: 8/5/2015
Test Engineer: Jude Semana
Configuration: EUT Only
Mode: LTE_QPSK Band 5 Fundamentals, 3MHz Bandwidth

Test Equipment:
Receiving: Sunol T185, and 3m Chamber C N-type Cable
Substitution: Dipole T273, 4ft SMA Cable Warehouse.

f MHz	SG reading (dBm)	Ant. Pol. (H/V)	Cable Loss (dB)	Antenna Gain (dBd)	ERP (dBm)	Limit (dBm)	Margin (dB)	Notes
Low Ch								
825.50	14.50	V	0.9	0.0	13.60	38.5	-24.8	
825.50	21.80	H	0.9	0.0	20.90	38.5	-17.5	
Mid Ch								
836.50	14.22	V	0.9	0.0	13.32	38.5	-25.1	
836.50	20.93	H	0.9	0.0	20.03	38.5	-18.4	
High Ch								
847.50	14.00	V	0.9	0.0	13.10	38.5	-25.3	
847.50	20.56	H	0.9	0.0	19.66	38.5	-18.8	

Rev. 3.17.11
Note: For Band 13/17 ERP limit is 34.77dBm; For Band 26 limit is 50dBm

UL VERIFICATION SERVICES INC. FORM NO: CCSUP4701H
47173 BENICIA STREET, FREMONT, CA 94538, USA TEL: (510) 771-1000 FAX: (510) 661-0888
This report shall not be reproduced except in full, without the written approval of UL Verification Services Inc.

Band

LTE5

1.4MHz

16QAM

High Frequency Substitution Measurement
UL Verification Services, Inc. Chamber C

Company: LG
Project #: 15I21442
Date: 8/5/2015
Test Engineer: Jude Semana
Configuration: EUT Only
Mode: LTE_16QAM Band 5 Fundamentals, 1.4MHz Bandwidth

Test Equipment:
Receiving: Sunol T185, and 3m Chamber C N-type Cable
Substitution: Dipole T273, 4ft SMA Cable Warehouse.

f MHz	SG reading (dBm)	Ant. Pol. (H/V)	Cable Loss (dB)	Antenna Gain (dBd)	ERP (dBm)	Limit (dBm)	Margin (dB)	Notes
Low Ch								
824.70	14.20	V	0.9	0.0	13.30	38.5	-25.1	
824.70	20.60	H	0.9	0.0	19.70	38.5	-18.7	
Mid Ch								
836.50	13.02	V	0.9	0.0	12.12	38.5	-26.3	
836.50	20.83	H	0.9	0.0	19.93	38.5	-18.5	
High Ch								
848.30	14.10	V	0.9	0.0	13.20	38.5	-25.2	
848.30	20.36	H	0.9	0.0	19.46	38.5	-19.0	

Rev. 3.17.11
Note: For Band 13/17 ERP limit is 34.77dBm; For Band 26 limit is 50dBm

UL VERIFICATION SERVICES INC. FORM NO: CCSUP4701H
47173 BENICIA STREET, FREMONT, CA 94538, USA TEL: (510) 771-1000 FAX: (510) 661-0888
This report shall not be reproduced except in full, without the written approval of UL Verification Services Inc.

Band

LTE5

1.4MHz

QPSK

High Frequency Substitution Measurement
UL Verification Services, Inc. Chamber C

Company: LG
Project #: 15I21442
Date: 8/5/2015
Test Engineer: Jude Semana
Configuration: EUT Only
Mode: LTE_QPSK Band 5 Fundamentals, 1.4MHz Bandwidth

Test Equipment:
Receiving: Sunol T185, and 3m Chamber C N-type Cable
Substitution: Dipole T273, 4ft SMA Cable Warehouse.

f MHz	SG reading (dBm)	Ant. Pol. (H/V)	Cable Loss (dB)	Antenna Gain (dBd)	ERP (dBm)	Limit (dBm)	Margin (dB)	Notes
Low Ch								
824.70	14.50	V	0.9	0.0	13.60	38.5	-24.8	
824.70	21.90	H	0.9	0.0	21.00	38.5	-17.4	
Mid Ch								
836.50	14.22	V	0.9	0.0	13.32	38.5	-25.1	
836.50	20.93	H	0.9	0.0	20.03	38.5	-18.4	
High Ch								
848.30	14.40	V	0.9	0.0	13.50	38.5	-24.9	
848.30	20.46	H	0.9	0.0	19.56	38.5	-18.9	

Rev. 3.17.11
Note: For Band 13/17 ERP limit is 34.77dBm; For Band 26 limit is 50dBm

UL VERIFICATION SERVICES INC. FORM NO: CCSUP4701H
47173 BENICIA STREET, FREMONT, CA 94538, USA TEL: (510) 771-1000 FAX: (510) 661-0888
This report shall not be reproduced except in full, without the written approval of UL Verification Services Inc.

LTE Band 12

Band

LTE12

10MHz

16QAM

High Frequency Substitution Measurement
UL Verification Services, Inc. Chamber C

Company: LG
Project #: 15I21442
Date: 8/6/2015
Test Engineer: Jude Semana
Configuration: EUT Only
Mode: LTE_16QAM Band 12 Fundamentals, 5MHz Bandwidth

Test Equipment:
Receiving: Sunol T185, and 3m Chamber C N-type Cable
Substitution: Dipole T273, 4ft SMA Cable Warehouse.

f MHz	SG reading (dBm)	Ant. Pol. (H/V)	Cable Loss (dB)	Antenna Gain (dBd)	ERP (dBm)	Limit (dBm)	Margin (dB)	Notes
Low Ch								
704.00	8.90	V	0.9	0.0	8.00	38.5	-30.4	
704.00	20.70	H	0.9	0.0	19.80	38.5	-18.6	
Mid Ch								
707.50	8.60	V	0.9	0.0	7.70	38.5	-30.7	
707.50	20.90	H	0.9	0.0	20.00	38.5	-18.4	
High Ch								
711.00	9.52	V	0.9	0.0	8.62	38.5	-29.8	
711.00	21.00	H	0.9	0.0	20.10	38.5	-18.3	

Rev. 3.17.11
Note: For Band 13/17 ERP limit is 34.77dBm; For Band 26 limit is 50dBm

UL VERIFICATION SERVICES INC. FORM NO: CCSUP4701H
47173 BENICIA STREET, FREMONT, CA 94538, USA TEL: (510) 771-1000 FAX: (510) 661-0888
This report shall not be reproduced except in full, without the written approval of UL Verification Services Inc.

Band

LTE12

10MHz

QPSK

High Frequency Substitution Measurement
UL Verification Services, Inc. Chamber C

Company: LG
Project #: 15I21442
Date: 8/6/2015
Test Engineer: Jude Semana
Configuration: EUT Only
Mode: LTE_QPSK Band 12 Fundamentals, 10MHz Bandwidth

Test Equipment:
Receiving: Sunol T185, and 3m Chamber C N-type Cable
Substitution: Dipole T273, 4ft SMA Cable Warehouse.

f MHz	SG reading (dBm)	Ant. Pol. (H/V)	Cable Loss (dB)	Antenna Gain (dBd)	ERP (dBm)	Limit (dBm)	Margin (dB)	Notes
Low Ch								
704.00	9.90	V	0.9	0.0	9.00	38.5	-29.4	
704.00	21.70	H	0.9	0.0	20.80	38.5	-17.6	
Mid Ch								
707.50	9.60	V	0.9	0.0	8.70	38.5	-29.7	
707.50	21.90	H	0.9	0.0	21.00	38.5	-17.4	
High Ch								
711.00	10.42	V	0.9	0.0	9.52	38.5	-28.9	
711.00	22.10	H	0.9	0.0	21.20	38.5	-17.2	

Rev. 3.17.11
Note: For Band 13/17 ERP limit is 34.77dBm; For Band 26 limit is 50dBm

UL VERIFICATION SERVICES INC. FORM NO: CCSUP4701H
47173 BENICIA STREET, FREMONT, CA 94538, USA TEL: (510) 771-1000 FAX: (510) 661-0888
This report shall not be reproduced except in full, without the written approval of UL Verification Services Inc.

Band

LTE12

5MHz

16QAM

High Frequency Substitution Measurement
UL Verification Services, Inc. Chamber C

Company: LG
Project #: 15I21442
Date: 8/6/2015
Test Engineer: Jude Semana
Configuration: EUT Only
Mode: LTE_16QAM Band 12 Fundamentals, 5MHz Bandwidth

Test Equipment:
Receiving: Sunol T185, and 3m Chamber C N-type Cable
Substitution: Dipole T273, 4ft SMA Cable Warehouse.

f MHz	SG reading (dBm)	Ant. Pol. (H/V)	Cable Loss (dB)	Antenna Gain (dBd)	ERP (dBm)	Limit (dBm)	Margin (dB)	Notes
Low Ch								
701.50	8.60	V	0.9	0.0	7.70	38.5	-30.7	
701.50	20.70	H	0.9	0.0	19.80	38.5	-18.6	
Mid Ch								
707.50	8.40	V	0.9	0.0	7.50	38.5	-30.9	
707.50	20.80	H	0.9	0.0	19.90	38.5	-18.5	
High Ch								
713.50	9.32	V	0.9	0.0	8.42	38.5	-30.0	
713.50	22.00	H	0.9	0.0	21.10	38.5	-17.3	

Rev. 3.17.11
Note: For Band 13/17 ERP limit is 34.77dBm; For Band 26 limit is 50dBm

UL VERIFICATION SERVICES INC. FORM NO: CCSUP4701H
47173 BENICIA STREET, FREMONT, CA 94538, USA TEL: (510) 771-1000 FAX: (510) 661-0888
This report shall not be reproduced except in full, without the written approval of UL Verification Services Inc.

Band

LTE12

5MHz

QPSK

High Frequency Substitution Measurement
UL Verification Services, Inc. Chamber C

Company: LG
Project #: 15I21442
Date: 8/6/2015
Test Engineer: Jude Semana
Configuration: EUT Only
Mode: LTE_QPSK Band 12 Fundamentals, 5MHz Bandwidth

Test Equipment:
Receiving: Sunol T185, and 3m Chamber C N-type Cable
Substitution: Dipole T273, 4ft SMA Cable Warehouse.

f MHz	SG reading (dBm)	Ant. Pol. (H/V)	Cable Loss (dB)	Antenna Gain (dBd)	ERP (dBm)	Limit (dBm)	Margin (dB)	Notes
Low Ch								
701.50	9.60	V	0.9	0.0	8.70	38.5	-29.7	
701.50	21.70	H	0.9	0.0	20.80	38.5	-17.6	
Mid Ch								
707.50	9.50	V	0.9	0.0	8.60	38.5	-29.8	
707.50	21.78	H	0.9	0.0	20.88	38.5	-17.6	
High Ch								
713.50	10.32	V	0.9	0.0	9.42	38.5	-29.0	
713.50	21.90	H	0.9	0.0	21.00	38.5	-17.4	

Rev. 3.17.11
Note: For Band 13/17 ERP limit is 34.77dBm; For Band 26 limit is 50dBm

UL VERIFICATION SERVICES INC. FORM NO: CCSUP4701H
47173 BENICIA STREET, FREMONT, CA 94538, USA TEL: (510) 771-1000 FAX: (510) 661-0888
This report shall not be reproduced except in full, without the written approval of UL Verification Services Inc.

Band

LTE12

3MHz

16QAM

High Frequency Substitution Measurement
UL Verification Services, Inc. Chamber C

Company: LG
Project #: 15I21442
Date: 8/6/2015
Test Engineer: Jude Semana
Configuration: EUT Only
Mode: LTE_16QAM Band 12 Fundamentals, 3MHz Bandwidth

Test Equipment:
Receiving: Sunol T185, and 3m Chamber C N-type Cable
Substitution: Dipole T273, 4ft SMA Cable Warehouse.

f MHz	SG reading (dBm)	Ant. Pol. (H/V)	Cable Loss (dB)	Antenna Gain (dBd)	ERP (dBm)	Limit (dBm)	Margin (dB)	Notes
Low Ch								
700.50	8.90	V	0.9	0.0	8.00	38.5	-30.4	
700.50	20.70	H	0.9	0.0	19.80	38.5	-18.6	
Mid Ch								
707.50	8.60	V	0.9	0.0	7.70	38.5	-30.7	
707.50	20.90	H	0.9	0.0	20.00	38.5	-18.4	
High Ch								
714.50	9.22	V	0.9	0.0	8.32	38.5	-30.1	
714.50	21.20	H	0.9	0.0	20.30	38.5	-18.1	

Rev. 3.17.11
Note: For Band 13/17 ERP limit is 34.77dBm; For Band 26 limit is 50dBm

UL VERIFICATION SERVICES INC. FORM NO: CCSUP4701H
47173 BENICIA STREET, FREMONT, CA 94538, USA TEL: (510) 771-1000 FAX: (510) 661-0888
This report shall not be reproduced except in full, without the written approval of UL Verification Services Inc.

Band

LTE12

3MHz

QPSK

High Frequency Substitution Measurement
UL Verification Services, Inc. Chamber C

Company: LG
Project #: 15I21442
Date: 8/6/2015
Test Engineer: Jude Semana
Configuration: EUT Only
Mode: LTE_QPSK Band 12 Fundamentals, 3MHz Bandwidth

Test Equipment:
Receiving: Sunol T185, and 3m Chamber C N-type Cable
Substitution: Dipole T273, 4ft SMA Cable Warehouse.

f MHz	SG reading (dBm)	Ant. Pol. (H/V)	Cable Loss (dB)	Antenna Gain (dBd)	ERP (dBm)	Limit (dBm)	Margin (dB)	Notes
Low Ch								
700.50	9.90	V	0.9	0.0	9.00	38.5	-29.4	
700.50	21.60	H	0.9	0.0	20.70	38.5	-17.7	
Mid Ch								
707.50	9.60	V	0.9	0.0	8.70	38.5	-29.7	
707.50	21.90	H	0.9	0.0	21.00	38.5	-17.4	
High Ch								
714.50	10.32	V	0.9	0.0	9.42	38.5	-29.0	
714.50	22.10	H	0.9	0.0	21.20	38.5	-17.2	

Rev. 3.17.11
Note: For Band 13/17 ERP limit is 34.77dBm; For Band 26 limit is 50dBm

UL VERIFICATION SERVICES INC. FORM NO: CCSUP4701H
47173 BENICIA STREET, FREMONT, CA 94538, USA TEL: (510) 771-1000 FAX: (510) 661-0888
This report shall not be reproduced except in full, without the written approval of UL Verification Services Inc.

Band

LTE12

1.4MHz

16QAM

High Frequency Substitution Measurement
UL Verification Services, Inc. Chamber C

Company: LG
Project #: 15I21442
Date: 8/6/2015
Test Engineer: Jude Semana
Configuration: EUT Only
Mode: LTE_16QAM Band 12 Fundamentals, 1.4MHz Bandwidth

Test Equipment:
Receiving: Sunol T185, and 3m Chamber C N-type Cable
Substitution: Dipole T273, 4ft SMA Cable Warehouse.

f MHz	SG reading (dBm)	Ant. Pol. (H/V)	Cable Loss (dB)	Antenna Gain (dBd)	ERP (dBm)	Limit (dBm)	Margin (dB)	Notes
Low Ch								
699.70	8.60	V	0.9	0.0	7.70	38.5	-30.7	
699.70	20.70	H	0.9	0.0	19.80	38.5	-18.6	
Mid Ch								
707.50	8.40	V	0.9	0.0	7.50	38.5	-30.9	
707.50	20.90	H	0.9	0.0	20.00	38.5	-18.4	
High Ch								
715.30	10.42	V	0.9	0.0	9.52	38.5	-28.9	
715.30	21.10	H	0.9	0.0	20.20	38.5	-18.2	

Rev. 3.17.11
Note: For Band 13/17 ERP limit is 34.77dBm; For Band 26 limit is 50dBm

UL VERIFICATION SERVICES INC. FORM NO: CCSUP4701H
47173 BENICIA STREET, FREMONT, CA 94538, USA TEL: (510) 771-1000 FAX: (510) 661-0888
This report shall not be reproduced except in full, without the written approval of UL Verification Services Inc.

Band

LTE12

1.4MHz

QPSK

High Frequency Substitution Measurement
UL Verification Services, Inc. Chamber C

Company: LG
Project #: 15I21442
Date: 8/6/2015
Test Engineer: Jude Semana
Configuration: EUT Only
Mode: LTE_QPSK Band 12 Fundamentals, 1.4MHz Bandwidth

Test Equipment:
Receiving: Sunol T185, and 3m Chamber C N-type Cable
Substitution: Dipole T273, 4ft SMA Cable Warehouse.

f MHz	SG reading (dBm)	Ant. Pol. (H/V)	Cable Loss (dB)	Antenna Gain (dBd)	ERP (dBm)	Limit (dBm)	Margin (dB)	Notes
Low Ch								
699.70	9.70	V	0.9	0.0	8.80	38.5	-29.6	
699.70	21.70	H	0.9	0.0	20.80	38.5	-17.6	
Mid Ch								
707.50	9.50	V	0.9	0.0	8.60	38.5	-29.8	
707.50	21.78	H	0.9	0.0	20.88	38.5	-17.6	
High Ch								
715.30	10.32	V	0.9	0.0	9.42	38.5	-29.0	
715.30	22.10	H	0.9	0.0	21.20	38.5	-17.2	

Rev. 3.17.11
Note: For Band 13/17 ERP limit is 34.77dBm; For Band 26 limit is 50dBm

UL VERIFICATION SERVICES INC. FORM NO: CCSUP4701H
47173 BENICIA STREET, FREMONT, CA 94538, USA TEL: (510) 771-1000 FAX: (510) 661-0888
This report shall not be reproduced except in full, without the written approval of UL Verification Services Inc.

LTE Band 17

Band

LTE17

10MHz

16QAM

High Frequency Substitution Measurement
UL Verification Services, Inc. Chamber C

Company: LG
Project #: 15I21442
Date: 8/6/2015
Test Engineer: Jude Semana
Configuration: EUT Only
Mode: LTE_16QAM Band 12 Fundamentals, 5MHz Bandwidth

Test Equipment:
Receiving: Sunol T185, and 3m Chamber C N-type Cable
Substitution: Dipole T273, 4ft SMA Cable Warehouse.

f MHz	SG reading (dBm)	Ant. Pol. (H/V)	Cable Loss (dB)	Antenna Gain (dBd)	ERP (dBm)	Limit (dBm)	Margin (dB)	Notes
Low Ch								
709.00	8.90	V	0.9	0.0	8.00	38.5	-30.4	
709.00	20.70	H	0.9	0.0	19.80	38.5	-18.6	
Mid Ch								
710.00	8.60	V	0.9	0.0	7.70	38.5	-30.7	
710.00	20.90	H	0.9	0.0	20.00	38.5	-18.4	
High Ch								
711.00	9.52	V	0.9	0.0	8.62	38.5	-29.8	
711.00	21.00	H	0.9	0.0	20.10	38.5	-18.3	

Rev. 3.17.11
Note: For Band 13/17 ERP limit is 34.77dBm; For Band 26 limit is 50dBm

This report shall not be reproduced except in full, without the written approval of UL Verification Services Inc.

Band

LTE17

10MHz

QPSK

High Frequency Substitution Measurement
UL Verification Services, Inc. Chamber C

Company: LG
Project #: 15I21442
Date: 8/6/2015
Test Engineer: Jude Semana
Configuration: EUT Only
Mode: LTE_QPSK Band 17 Fundamentals, 10MHz Bandwidth

Test Equipment:
Receiving: Sunol T185, and 3m Chamber C N-type Cable
Substitution: Dipole T273, 4ft SMA Cable Warehouse.

f MHz	SG reading (dBm)	Ant. Pol. (H/V)	Cable Loss (dB)	Antenna Gain (dBd)	ERP (dBm)	Limit (dBm)	Margin (dB)	Notes
Low Ch								
709.00	9.90	V	0.9	0.0	9.00	38.5	-29.4	
709.00	21.70	H	0.9	0.0	20.80	38.5	-17.6	
Mid Ch								
710.00	9.60	V	0.9	0.0	8.70	38.5	-29.7	
710.00	21.90	H	0.9	0.0	21.00	38.5	-17.4	
High Ch								
711.00	10.42	V	0.9	0.0	9.52	38.5	-28.9	
711.00	22.10	H	0.9	0.0	21.20	38.5	-17.2	

Rev. 3.17.11
Note: For Band 13/17 ERP limit is 34.77dBm; For Band 26 limit is 50dBm

UL VERIFICATION SERVICES INC. FORM NO: CCSUP4701H
47173 BENICIA STREET, FREMONT, CA 94538, USA TEL: (510) 771-1000 FAX: (510) 661-0888
This report shall not be reproduced except in full, without the written approval of UL Verification Services Inc.

Band

LTE17

5MHz

16QAM

High Frequency Substitution Measurement
UL Verification Services, Inc. Chamber C

Company: LG
Project #: 15I21442
Date: 8/6/2015
Test Engineer: Jude Semana
Configuration: EUT Only
Mode: LTE_16QAM Band 17 Fundamentals, 5MHz Bandwidth

Test Equipment:
Receiving: Sunol T185, and 3m Chamber C N-type Cable
Substitution: Dipole T273, 4ft SMA Cable Warehouse.

f MHz	SG reading (dBm)	Ant. Pol. (H/V)	Cable Loss (dB)	Antenna Gain (dBd)	ERP (dBm)	Limit (dBm)	Margin (dB)	Notes
Low Ch								
706.50	8.60	V	0.9	0.0	7.70	38.5	-30.7	
706.50	20.70	H	0.9	0.0	19.80	38.5	-18.6	
Mid Ch								
710.00	8.40	V	0.9	0.0	7.50	38.5	-30.9	
710.00	20.80	H	0.9	0.0	19.90	38.5	-18.5	
High Ch								
713.50	9.32	V	0.9	0.0	8.42	38.5	-30.0	
713.50	22.00	H	0.9	0.0	21.10	38.5	-17.3	

Rev. 3.17.11
Note: For Band 13/17 ERP limit is 34.77dBm; For Band 26 limit is 50dBm

UL VERIFICATION SERVICES INC. FORM NO: CCSUP4701H
47173 BENICIA STREET, FREMONT, CA 94538, USA TEL: (510) 771-1000 FAX: (510) 661-0888
This report shall not be reproduced except in full, without the written approval of UL Verification Services Inc.

Band

LTE17

5MHz

QPSK

High Frequency Substitution Measurement
UL Verification Services, Inc. Chamber C

Company: LG
Project #: 15I21442
Date: 8/6/2015
Test Engineer: Jude Semana
Configuration: EUT Only
Mode: LTE_QPSK Band 17 Fundamentals, 5MHz Bandwidth

Test Equipment:
Receiving: Sunol T185, and 3m Chamber C N-type Cable
Substitution: Dipole T273, 4ft SMA Cable Warehouse.

f MHz	SG reading (dBm)	Ant. Pol. (H/V)	Cable Loss (dB)	Antenna Gain (dBd)	ERP (dBm)	Limit (dBm)	Margin (dB)	Notes
Low Ch								
706.50	9.60	V	0.9	0.0	8.70	38.5	-29.7	
706.50	21.70	H	0.9	0.0	20.80	38.5	-17.6	
Mid Ch								
710.00	9.50	V	0.9	0.0	8.60	38.5	-29.8	
710.00	21.78	H	0.9	0.0	20.88	38.5	-17.6	
High Ch								
713.50	10.32	V	0.9	0.0	9.42	38.5	-29.0	
713.50	21.90	H	0.9	0.0	21.00	38.5	-17.4	

Rev. 3.17.11
Note: For Band 13/17 ERP limit is 34.77dBm; For Band 26 limit is 50dBm

UL VERIFICATION SERVICES INC. FORM NO: CCSUP4701H
47173 BENICIA STREET, FREMONT, CA 94538, USA TEL: (510) 771-1000 FAX: (510) 661-0888
This report shall not be reproduced except in full, without the written approval of UL Verification Services Inc.

LTE Band 30

Band

LTE30

10MHz

16QAM

High Frequency Substitution Measurement
UL Verification Services, Inc. Chamber A

Company: LG
Project #: 15I21442
Date: 08/03/15
Test Engineer: D. Mun
Configuration: EUT Only (X position)
Location: Chamber A
Mode: TX, LTE band 30 10MHz, 16QAM

Test Equipment:
Receiving: Horn T119, and Chamber A SMA Cables
Substitution: Horn T60 Substitution, 4ft SMA Cable Warehouse

f MHz	SG reading (dBm)	Ant. Pol. (H/V)	Cable Loss (dB)	Antenna Gain (dBd)	EIRP (dBm)	Limit (dBm)	Margin (dB)	Notes
Low Ch								
		V	0.9					
		H	0.9					
Mid Ch								
2310.00	1.85	V	0.9	9.3	10.30	24.0	-13.7	
2310.00	11.56	H	0.9	9.3	20.01	24.0	-4.0	
High Ch								
		V	0.9	8.0				
		H	0.9	8.0				

Rev. 3.17.11
Note: For Band 4 EIRP limit is 30dBm

This report shall not be reproduced except in full, without the written approval of UL Verification Services Inc.

Band

LTE30

10MHz

QPSK

High Frequency Substitution Measurement
UL Verification Services, Inc.

Company: LG
Project #: 15I21442
Date: 08/03/15
Test Engineer: D. Mun
Configuration: EUT Only (X position)
Location: Chamber A
Mode: TX, LTE band 30 10MHz, QPSK

Test Equpment:
Receiving: Horn T119, and Chamber A SMA Cables
Substitution: Horn T60 Substitution, 4ft SMA Cable Warehouse

f MHz	SG reading (dBm)	Ant. Pol. (H/V)	Cable Loss (dB)	Antenna Gain (dBi)	EIRP (dBm)	Limit (dBm)	Delta (dB)	Notes
Low Ch								
	0.00	V	0.9	8.0	0.00		0.0	
	0.00	H	0.9	8.0	0.00		0.0	
Mid Ch								
2310.00	2.59	V	0.9	9.3	10.99	24.0	-13.0	
2310.00	12.50	H	0.9	9.3	20.90	24.0	-3.1	
High Ch								
	0.00	V	0.9	8.0	0.00		0.0	
	0.00	H	0.9	8.0	0.00		0.0	

UL VERIFICATION SERVICES INC. FORM NO: CCSUP4701H
47173 BENICIA STREET, FREMONT, CA 94538, USA TEL: (510) 771-1000 FAX: (510) 661-0888
This report shall not be reproduced except in full, without the written approval of UL Verification Services Inc.

Band

LTE30

5MHz

16QAM

High Frequency Substitution Measurement
UL Verification Services, Inc. Chamber A

Company: LG
Project #: 15I21442
Date: 08/03/15
Test Engineer: D. Mun
Configuration: EUT Only (X position)
Location: Chamber A
Mode: TX, LTE band 30 5MHz, 16QAM

Test Equipment:
Receiving: Horn T119, and Chamber C SMA Cables
Substitution: Horn T60 Substitution, 4ft SMA Cable Warehouse

f MHz	SG reading (dBm)	Ant. Pol. (H/V)	Cable Loss (dB)	Antenna Gain (dBd)	EIRP (dBm)	Limit (dBm)	Margin (dB)	Notes
Low Ch								
2307.50	1.22	V	0.9	9.3	9.67	24.0	-14.3	
2307.50	10.66	H	0.9	9.3	19.11	24.0	-4.9	
Mid Ch								
2310.00	1.79	V	0.9	9.3	10.24	24.0	-13.7	
2310.00	11.48	H	0.9	9.3	19.93	24.0	-4.0	
High Ch								
2312.50	1.78	V	0.9	9.3	10.23	24.0	-13.7	
2312.50	11.04	H	0.9	9.3	19.49	24.0	-4.5	

Rev. 3.17.11
Note: For Band 4 EIRP limit is 30dBm

This report shall not be reproduced except in full, without the written approval of UL Verification Services Inc.

Band

LTE30

5MHz

QPSK

High Frequency Substitution Measurement
UL Verification Services, Inc.

Company: LG
Project #: 15I21442
Date: 08/03/15
Test Engineer: D. Mun
Configuration: EUT Only (X position)
Location: Chamber A
Mode: TX, LTE band 30 5MHz, QPSK

Test Equpment:
Receiving: Horn T119, and Chamber C SMA Cables
Substitution: Horn T60 Substitution, 4ft SMA Cable Warehouse

f MHz	SG reading (dBm)	Ant. Pol. (H/V)	Cable Loss (dB)	Antenna Gain (dBi)	EIRP (dBm)	Limit (dBm)	Delta (dB)	Notes
Low Ch								
2307.50	2.13	V	0.9	9.4	10.63	24.0	-13.3	
2307.50	11.60	H	0.9	9.4	20.10	24.0	-3.9	
Mid Ch								
2310.00	2.58	V	0.9	9.4	11.08	24.0	-12.9	
2310.00	12.10	H	0.9	9.4	20.60	24.0	-3.4	
High Ch								
2312.50	1.87	V	0.9	9.4	10.37	24.0	-13.6	
2312.50	12.44	H	0.9	9.4	20.94	24.0	-3.0	

UL VERIFICATION SERVICES INC. FORM NO: CCSUP4701H
47173 BENICIA STREET, FREMONT, CA 94538, USA TEL: (510) 771-1000 FAX: (510) 661-0888
This report shall not be reproduced except in full, without the written approval of UL Verification Services Inc.

9.2. FIELD STRENGTH OF SPURIOUS RADIATION

RULE PART(S)

FCC: §2.1053, §22.917, §24.238, §27.53

LIMIT

The power of any emission outside of the authorized operating frequency ranges must be attenuated below the transmitting power (P) by a factor of at least 43 + 10 log (P) dB.

Part 27: (m)(4) (4) For mobile digital stations, the attenuation factor shall be not less than 40 + 10 log (P) dB on all frequencies between the channel edge and 5 megahertz from the channel edge, 43 + 10 log (P) dB on all frequencies between 5 megahertz and X megahertz from the channel edge, and 55 + 10 log (P) dB on all frequencies more than X megahertz from the channel edge, where X is the greater of 6 megahertz or the actual emission bandwidth as defined in paragraph (m)(6) of this section. In addition, the attenuation factor shall not be less that 43 + 10 log (P) dB on all frequencies between 2490.5 MHz and 2496 MHz and 55 + 10 log (P) dB at or below 2490.5 MHz. Mobile Satellite Service licensees operating on frequencies below 2495 MHz may also submit a documented interference complaint against BRS licensees operating on channel BRS Channel 1 on the same terms and conditions as adjacent channel BRS or EBS licensees.

TEST PROCEDURE

For Cellular equipment - Compliance with these rules is based on the use of measurement instrumentation employing a resolution bandwidth of 100 kHz or greater. In the 1 MHz bands immediately outside and adjacent to the frequency block a resolution bandwidth of at least one percent of the emission bandwidth of the fundamental emission of the transmitter may be employed. A narrower resolution bandwidth is permitted in all cases to improve measurement accuracy provided the measured power is integrated over the full required measurement bandwidth (i.e. 100 kHz or 1 percent of emission bandwidth, as specified). The emission bandwidth is defined as the width of the signal between two points, one below the carrier center frequency and one above the carrier center frequency, outside of which all emissions are attenuated at least 26 dB below the transmitter power.

For PCS equipment - Compliance with these rules is based on the use of measurement instrumentation employing a resolution bandwidth of 1 MHz or greater. However, in the 1 MHz bands immediately outside and adjacent to the frequency block a resolution bandwidth of at least one percent of the emission bandwidth of the fundamental emission of the transmitter may be employed. A narrower resolution bandwidth is permitted in all cases to improve measurement accuracy provided the measured power is integrated over the full required measurement bandwidth (i.e. 1 MHz or 1 percent of emission bandwidth, as specified). The emission bandwidth is defined as the width of the signal between two points, one below the carrier center frequency and one above the carrier center frequency, outside of which all emissions are attenuated at least 26 dB below the transmitter power.

MODES TESTED

GSM, WCDMA, and LTE

RESULTS

This report shall not be reproduced except in full, without the written approval of UL Verification Services Inc.

9.2.1. SPURIOUS RADIATION PLOTS

GSM

UL Verification Services
Above 1GHz High Frequency Substitution Measurement

Company: LG
Project #: 15I21442
Date: 8/5/2015
Test Engineer: Jude Semana
Configuration: EUT w/ AC Adapter + Headset
Location: Chamber C
Mode: EGPRS 850 MHz Harmonics

Band	f MHz	SG reading (dBm)	Ant. Pol. (H/V)	Distance (m)	Preamp (dB)	Filter (dB)	EIRP (dBm)	Limit (dBm)	Delta (dB)	Notes
	Low Ch, 824.2									
GSM	1648.40	-23.2	V	3.0	37.0	1.0	-59.2	-13.0	-46.2	
	2472.60	-20.7	V	3.0	36.4	1.0	-56.1	-13.0	-43.1	
850	3296.80	-17.6	V	3.0	36.2	1.0	-52.7	-13.0	-39.7	
	1648.40	-24.3	H	3.0	37.0	1.0	-60.4	-13.0	-47.4	
	2472.60	-22.9	H	3.0	36.4	1.0	-58.3	-13.0	-45.3	
EGPRS	3296.80	-17.6	H	3.0	36.2	1.0	-52.8	-13.0	-39.8	
	Mid Ch, 836.6									
	1673.20	-23.4	V	3.0	37.0	1.0	-59.4	-13.0	-46.4	
	2509.80	-21.2	V	3.0	36.4	1.0	-56.6	-13.0	-43.6	
	3346.40	-17.8	V	3.0	36.1	1.0	-52.9	-13.0	-39.9	
	1673.20	-24.1	H	3.0	37.0	1.0	-60.1	-13.0	-47.1	
	2509.80	-22.8	H	3.0	36.4	1.0	-58.2	-13.0	-45.2	
	3346.40	-17.0	H	3.0	36.1	1.0	-52.1	-13.0	-39.1	
	High Ch, 848.8									
	1697.60	-23.1	V	3.0	37.0	1.0	-59.0	-13.0	-46.0	
	2546.40	-20.8	V	3.0	36.4	1.0	-56.2	-13.0	-43.2	
	3395.20	-17.6	V	3.0	36.1	1.0	-52.6	-13.0	-39.6	
	1697.60	-23.8	H	3.0	37.0	1.0	-59.7	-13.0	-46.7	
	2546.40	-22.2	H	3.0	36.4	1.0	-57.6	-13.0	-44.6	
	3395.20	-17.4	H	3.0	36.1	1.0	-52.5	-13.0	-39.5	

UL VERIFICATION SERVICES INC. FORM NO: CCSUP4701H
47173 BENICIA STREET, FREMONT, CA 94538, USA TEL: (510) 771-1000 FAX: (510) 661-0888
This report shall not be reproduced except in full, without the written approval of UL Verification Services Inc.

UL Verification Services
Above 1GHz High Frequency Substitution Measurement

Company: LG
Project #: 15I21442
Date: 8/5/2015
Test Engineer: Jude Semana
Configuration: EUT w/ AC Adapter + Headset
Location: Chamber C
Mode: GPRS 850 MHz Harmonics

Band	f MHz	SG reading (dBm)	Ant. Pol. (H/V)	Distance (m)	Preamp (dB)	Filter (dB)	EIRP (dBm)	Limit (dBm)	Delta (dB)	Notes
	Low Ch, 824.2									
GSM	1648.40	-23.0	V	3.0	37.0	1.0	-59.1	-13.0	-46.1	
	2472.60	-20.7	V	3.0	36.4	1.0	-56.1	-13.0	-43.1	
850	3296.80	-17.5	V	3.0	36.2	1.0	-52.6	-13.0	-39.6	
	1648.40	-24.0	H	3.0	37.0	1.0	-60.0	-13.0	-47.0	
GPRS	2472.60	-22.6	H	3.0	36.4	1.0	-58.0	-13.0	-45.0	
	3296.80	-17.3	H	3.0	36.2	1.0	-52.5	-13.0	-39.5	
	Mid Ch, 836.6									
	1673.20	-22.9	V	3.0	37.0	1.0	-58.9	-13.0	-45.9	
	2509.80	-20.6	V	3.0	36.4	1.0	-56.0	-13.0	-43.0	
	3346.40	-17.4	V	3.0	36.1	1.0	-52.5	-13.0	-39.5	
	1673.20	-23.8	H	3.0	37.0	1.0	-59.7	-13.0	-46.7	
	2509.80	-22.4	H	3.0	36.4	1.0	-57.8	-13.0	-44.8	
	3346.40	-17.3	H	3.0	36.1	1.0	-52.4	-13.0	-39.4	
	High Ch, 848.8									
	1697.60	-22.8	V	3.0	37.0	1.0	-58.8	-13.0	-45.8	
	2546.40	-20.7	V	3.0	36.4	1.0	-56.2	-13.0	-43.2	
	3395.20	-17.5	V	3.0	36.1	1.0	-52.6	-13.0	-39.6	
	1697.60	-23.9	H	3.0	37.0	1.0	-59.8	-13.0	-46.8	
	2546.40	-22.5	H	3.0	36.4	1.0	-57.9	-13.0	-44.9	
	3395.20	-17.4	H	3.0	36.1	1.0	-52.4	-13.0	-39.4	

UL VERIFICATION SERVICES INC. FORM NO: CCSUP4701H
47173 BENICIA STREET, FREMONT, CA 94538, USA TEL: (510) 771-1000 FAX: (510) 661-0888
This report shall not be reproduced except in full, without the written approval of UL Verification Services Inc.

Band

GSM

1900

EGPRS

UL Verification Services, Inc.
Above 1GHz High Frequency Substitution Measurement

Company: LG
Project #: 15I21442
Date: 8/3/2015
Test Engineer: J. Wu and O. Stoelting
Configuration: X-pos EUT Only
Location: Chamber B
Mode: EGPRS 1900 MHz Harmonics

f MHz	SG reading (dBm)	Ant. Pol. (H/V)	Distance (m)	Preamp (dB)	Filter (dB)	EIRP (dBm)	Limit (dBm)	Delta (dB)	Notes
Low Ch, 1850.2									
3700.40	-10.1	V	3.0	35.9	1.0	-45.0	-13.0	-32.0	
5550.60	-8.4	V	3.0	35.5	1.0	-42.8	-13.0	-29.8	
7400.80	-8.3	V	3.0	35.7	1.0	-43.0	-13.0	-30.0	
3700.40	-11.6	H	3.0	35.9	1.0	-46.5	-13.0	-33.5	
5550.60	-8.3	H	3.0	35.5	1.0	-42.8	-13.0	-29.8	
7400.80	-6.5	H	3.0	35.7	1.0	-41.2	-13.0	-28.2	
Mid Ch, 1880									
3760.00	-11.4	V	3.0	35.8	1.0	-46.2	-13.0	-33.2	
5640.00	-9.1	V	3.0	35.5	1.0	-43.5	-13.0	-30.5	
7520.00	-8.6	V	3.0	35.7	1.0	-43.3	-13.0	-30.3	
3760.00	-10.8	H	3.0	35.8	1.0	-45.6	-13.0	-32.6	
5640.00	-8.2	H	3.0	35.5	1.0	-42.7	-13.0	-29.7	
7520.00	-7.2	H	3.0	35.7	1.0	-42.0	-13.0	-29.0	
High Ch, 1909.8									
3819.60	-11.8	V	3.0	35.8	1.0	-46.5	-13.0	-33.5	
5729.40	-9.8	V	3.0	35.5	1.0	-44.3	-13.0	-31.3	
7639.20	-8.2	V	3.0	35.8	1.0	-42.9	-13.0	-29.9	
3819.60	-10.6	H	3.0	35.8	1.0	-45.4	-13.0	-32.4	
5729.40	-8.2	H	3.0	35.5	1.0	-42.7	-13.0	-29.7	
7639.20	-6.9	H	3.0	35.8	1.0	-41.6	-13.0	-28.6	

This report shall not be reproduced except in full, without the written approval of UL Verification Services Inc.

UL Verification Services, Inc.
Above 1GHz High Frequency Substitution Measurement

Company: LG
Project #: 15I21442
Date: 8/3/2015
Test Engineer: J. Wu and O. Stoelting
Configuration: X-pos EUT Only
Location: Chamber B
Mode: GPRS 1900 MHz Harmonics

Band

GSM

1900

GPRS

f MHz	SG reading (dBm)	Ant. Pol. (H/V)	Distance (m)	Preamp (dB)	Filter (dB)	EIRP (dBm)	Limit (dBm)	Delta (dB)	Notes
Low Ch, 1850.2									
3700.40	-12.1	V	3.0	35.9	1.0	-47.0	-13.0	-34.0	
5550.60	-9.4	V	3.0	35.5	1.0	-43.9	-13.0	-30.9	
7400.80	-8.5	V	3.0	35.7	1.0	-43.3	-13.0	-30.3	
3700.40	-11.2	H	3.0	35.9	1.0	-46.1	-13.0	-33.1	
5550.60	-8.5	H	3.0	35.5	1.0	-43.0	-13.0	-30.0	
7400.80	-7.0	H	3.0	35.7	1.0	-41.7	-13.0	-28.7	
Mid Ch, 1880									
3760.00	-10.4	V	3.0	35.8	1.0	-45.2	-13.0	-32.2	
5640.00	-9.5	V	3.0	35.5	1.0	-44.0	-13.0	-31.0	
7520.00	-8.6	V	3.0	35.7	1.0	-43.3	-13.0	-30.3	
3760.00	-10.6	H	3.0	35.8	1.0	-45.4	-13.0	-32.4	
5640.00	-8.6	H	3.0	35.5	1.0	-43.1	-13.0	-30.1	
7520.00	-6.8	H	3.0	35.7	1.0	-41.5	-13.0	-28.5	
High Ch, 1909.8									
3819.60	-11.3	V	3.0	35.8	1.0	-46.0	-13.0	-33.0	
5729.40	-9.3	V	3.0	35.5	1.0	-43.8	-13.0	-30.8	
7639.20	-7.6	V	3.0	35.8	1.0	-42.4	-13.0	-29.4	
3819.60	-11.0	H	3.0	35.8	1.0	-45.7	-13.0	-32.7	
5729.40	-8.3	H	3.0	35.5	1.0	-42.8	-13.0	-29.8	
7639.20	-6.5	H	3.0	35.8	1.0	-41.2	-13.0	-28.2	

UL VERIFICATION SERVICES INC. FORM NO: CCSUP4701H
47173 BENICIA STREET, FREMONT, CA 94538, USA TEL: (510) 771-1000 FAX: (510) 661-0888
This report shall not be reproduced except in full, without the written approval of UL Verification Services Inc.

WCDMA

UL Verification Services, Inc.
Above 1GHz High Frequency Substitution Measurement

Company: LG
Project #: 15I21442
Date: 8/3/2015
Test Engineer: J. Wu and O. Stoelting
Configuration: X-pos EUT Only
Location: Chamber B
Mode: HSDPA Band 2 Harmonics

Band

Band 2

HSDPA

f MHz	SG reading (dBm)	Ant. Pol. (H/V)	Distance (m)	Preamp (dB)	Filter (dB)	EIRP (dBm)	Limit (dBm)	Delta (dB)	Notes
Low Ch, 1852.4									
3704.80	-9.7	V	3.0	35.9	1.0	-44.5	-13.0	-31.5	
5557.20	-7.0	V	3.0	35.5	1.0	-41.4	-13.0	-28.4	
7409.60	-7.0	V	3.0	35.7	1.0	-41.7	-13.0	-28.7	
3704.80	-8.0	H	3.0	35.9	1.0	-42.9	-13.0	-29.9	
5557.20	-6.3	H	3.0	35.5	1.0	-40.8	-13.0	-27.8	
7409.60	-4.2	H	3.0	35.7	1.0	-38.9	-13.0	-25.9	
Mid Ch, 1880									
3760.00	-7.9	V	3.0	35.8	1.0	-42.7	-13.0	-29.7	
5640.00	-5.9	V	3.0	35.5	1.0	-40.4	-13.0	-27.4	
7520.00	-5.2	V	3.0	35.7	1.0	-39.9	-13.0	-26.9	
3760.00	-8.6	H	3.0	35.8	1.0	-43.4	-13.0	-30.4	
5640.00	-5.2	H	3.0	35.5	1.0	-39.7	-13.0	-26.7	
7520.00	-3.0	H	3.0	35.7	1.0	-37.7	-13.0	-24.7	
High Ch, 1907.6									
3815.20	-9.2	V	3.0	35.8	1.0	-44.0	-13.0	-31.0	
5722.80	-6.1	V	3.0	35.5	1.0	-40.6	-13.0	-27.6	
7630.40	-6.0	V	3.0	35.8	1.0	-40.7	-13.0	-27.7	
3815.20	-8.6	H	3.0	35.8	1.0	-43.4	-13.0	-30.4	
5722.80	-5.4	H	3.0	35.5	1.0	-39.9	-13.0	-26.9	
7630.40	-3.7	H	3.0	35.8	1.0	-38.5	-13.0	-25.5	

This report shall not be reproduced except in full, without the written approval of UL Verification Services Inc.

Band

Band 2

REL99

UL Verification Services, Inc.
Above 1GHz High Frequency Substitution Measurement

Company: LG
Project #: 15I21442
Date: 8/3/2015
Test Engineer: J. Wu and O. Stoelting
Configuration: X-pos EUT Only
Location: Chamber B
Mode: Rel99 Band 2 Harmonics

f MHz	SG reading (dBm)	Ant. Pol. (H/V)	Distance (m)	Preamp (dB)	Filter (dB)	EIRP (dBm)	Limit (dBm)	Delta (dB)	Notes
Low Ch, 1852.4									
3704.80	-8.1	V	3.0	35.9	1.0	-42.9	-13.0	-29.9	
5557.20	-5.5	V	3.0	35.5	1.0	-39.9	-13.0	-26.9	
7409.60	-4.9	V	3.0	35.7	1.0	-39.6	-13.0	-26.6	
3704.80	-8.8	H	3.0	35.9	1.0	-43.6	-13.0	-30.6	
5557.20	-4.9	H	3.0	35.5	1.0	-39.4	-13.0	-26.4	
7409.60	-4.5	H	3.0	35.7	1.0	-39.3	-13.0	-26.3	
Mid Ch, 1880									
3760.00	-8.1	V	3.0	35.8	1.0	-42.9	-13.0	-29.9	
5640.00	-6.6	V	3.0	35.5	1.0	-41.1	-13.0	-28.1	
7520.00	-5.3	V	3.0	35.7	1.0	-40.1	-13.0	-27.1	
3760.00	-8.2	H	3.0	35.8	1.0	-43.1	-13.0	-30.1	
5640.00	-4.9	H	3.0	35.5	1.0	-39.4	-13.0	-26.4	
7520.00	-2.8	H	3.0	35.7	1.0	-37.6	-13.0	-24.6	
High Ch, 1907.6									
3815.20	-8.1	V	3.0	35.8	1.0	-42.9	-13.0	-29.9	
5722.80	-5.9	V	3.0	35.5	1.0	-40.4	-13.0	-27.4	
7630.40	-5.1	V	3.0	35.8	1.0	-39.9	-13.0	-26.9	
3815.20	-7.4	H	3.0	35.8	1.0	-42.1	-13.0	-29.1	
5722.80	-5.6	H	3.0	35.5	1.0	-40.1	-13.0	-27.1	
7630.40	-2.9	H	3.0	35.8	1.0	-37.7	-13.0	-24.7	

UL VERIFICATION SERVICES INC. FORM NO: CCSUP4701H
47173 BENICIA STREET, FREMONT, CA 94538, USA TEL: (510) 771-1000 FAX: (510) 661-0888

This report shall not be reproduced except in full, without the written approval of UL Verification Services Inc.

UL Verification Services
Above 1GHz High Frequency Substitution Measurement

Company: LG
Project #: 15I21442
Date: 8/5/2015
Test Engineer: Jude Semana
Configuration: EUT w/ AC Adapter + Headset
Location: Chamber C
Mode: HSDPA Band 5 Harmonics

Band

Band 5

HSDPA

f MHz	SG reading (dBm)	Ant. Pol. (H/V)	Distance (m)	Preamp (dB)	Filter (dB)	EIRP (dBm)	Limit (dBm)	Delta (dB)	Notes
Low Ch, 826.4									
1652.80	-24.7	V	3.0	37.0	1.0	-60.7	-13.0	-47.7	
2479.20	-19.5	V	3.0	36.4	1.0	-55.0	-13.0	-42.0	
3305.60	-19.8	V	3.0	36.1	1.0	-54.9	-13.0	-41.9	
1652.80	-24.9	H	3.0	37.0	1.0	-60.9	-13.0	-47.9	
2479.20	-18.7	H	3.0	36.4	1.0	-54.1	-13.0	-41.1	
3305.60	-19.5	H	3.0	36.1	1.0	-54.7	-13.0	-41.7	
Mid Ch, 836.6									
1673.20	-24.4	V	3.0	37.0	1.0	-60.4	-13.0	-47.4	
2509.80	-18.9	V	3.0	36.4	1.0	-54.3	-13.0	-41.3	
3346.40	-19.7	V	3.0	36.1	1.0	-54.8	-13.0	-41.8	
1673.20	-24.8	H	3.0	37.0	1.0	-60.8	-13.0	-47.8	
2509.80	-18.7	H	3.0	36.4	1.0	-54.1	-13.0	-41.1	
3346.40	-19.6	H	3.0	36.1	1.0	-54.7	-13.0	-41.7	
High Ch, 846.6									
1693.20	-24.5	V	3.0	37.0	1.0	-60.5	-13.0	-47.5	
2539.80	-18.7	V	3.0	36.4	1.0	-54.2	-13.0	-41.2	
3386.40	-19.7	V	3.0	36.1	1.0	-54.8	-13.0	-41.8	
1693.20	-24.5	H	3.0	37.0	1.0	-60.5	-13.0	-47.5	
2539.80	-18.6	H	3.0	36.4	1.0	-54.0	-13.0	-41.0	
3386.40	-19.8	H	3.0	36.1	1.0	-54.9	-13.0	-41.9	

UL VERIFICATION SERVICES INC. FORM NO: CCSUP4701H
47173 BENICIA STREET, FREMONT, CA 94538, USA TEL: (510) 771-1000 FAX: (510) 661-0888

This report shall not be reproduced except in full, without the written approval of UL Verification Services Inc.

UL Verification Services
Above 1GHz High Frequency Substitution Measurement

Company: LG
Project #: 15I21442
Date: 8/5/2015
Test Engineer: Jude Semana
Configuration: EUT w/ AC Adapter + Headset
Location: Chamber C
Mode: Rel99 Band 5 Harmonics

Band
Band 5
REL99

f MHz	SG reading (dBm)	Ant. Pol. (H/V)	Distance (m)	Preamp (dB)	Filter (dB)	EIRP (dBm)	Limit (dBm)	Delta (dB)	Notes
Low Ch, 826.4									
1652.80	-24.7	V	3.0	37.0	1.0	-60.7	-13.0	-47.7	
2479.20	-18.6	V	3.0	36.4	1.0	-54.0	-13.0	-41.0	
3305.60	-19.7	V	3.0	36.1	1.0	-54.9	-13.0	-41.9	
1652.80	-24.9	H	3.0	37.0	1.0	-60.9	-13.0	-47.9	
2479.20	-18.4	H	3.0	36.4	1.0	-53.9	-13.0	-40.9	
3305.60	-19.5	H	3.0	36.1	1.0	-54.7	-13.0	-41.7	
Mid Ch, 836.6									
1673.20	-24.5	V	3.0	37.0	1.0	-60.5	-13.0	-47.5	
2509.80	-18.8	V	3.0	36.4	1.0	-54.3	-13.0	-41.3	
3346.40	-19.7	V	3.0	36.1	1.0	-54.8	-13.0	-41.8	
1673.20	-24.6	H	3.0	37.0	1.0	-60.6	-13.0	-47.6	
2509.80	-19.7	H	3.0	36.4	1.0	-55.1	-13.0	-42.1	
3346.40	-19.5	H	3.0	36.1	1.0	-54.7	-13.0	-41.7	
High Ch, 846.6									
1693.20	-24.4	V	3.0	37.0	1.0	-60.4	-13.0	-47.4	
2539.80	-18.8	V	3.0	36.4	1.0	-54.2	-13.0	-41.2	
3386.40	-19.7	V	3.0	36.1	1.0	-54.7	-13.0	-41.7	
1693.20	-24.4	H	3.0	37.0	1.0	-60.4	-13.0	-47.4	
2539.80	-19.5	H	3.0	36.4	1.0	-54.9	-13.0	-41.9	
3386.40	-19.8	H	3.0	36.1	1.0	-54.9	-13.0	-41.9	

UL VERIFICATION SERVICES INC. FORM NO: CCSUP4701H
47173 BENICIA STREET, FREMONT, CA 94538, USA TEL: (510) 771-1000 FAX: (510) 661-0888
This report shall not be reproduced except in full, without the written approval of UL Verification Services Inc.

LTE Band 2

UL Verification Services, Inc.
Above 1GHz High Frequency Substitution Measurement

Company: LG
Project #: 15I21442
Date: 8/4/2015
Test Engineer: Jude Semana
Configuration: EUT + Charger + Headset
Location: Chamber C
Mode: LTE_16QAM Band 2 Harmonics, 20MHz Bandwidth

Band
LTE2
20MHz
16QAM

f MHz	SG reading (dBm)	Ant. Pol. (H/V)	Distance (m)	Preamp (dB)	Filter (dB)	EIRP (dBm)	Limit (dBm)	Delta (dB)	Notes
Low Ch, 1860									
3720.00	-14.8	V	3.0	35.8	1.0	-49.6	-13.0	-36.6	
5580.00	-11.0	V	3.0	35.5	1.0	-45.5	-13.0	-32.5	
7440.00	-9.8	V	3.0	35.7	1.0	-44.5	-13.0	-31.5	
3720.00	-15.0	H	3.0	35.8	1.0	-49.8	-13.0	-36.8	
5580.00	-10.4	H	3.0	35.5	1.0	-44.9	-13.0	-31.9	
7440.00	-8.4	H	3.0	35.7	1.0	-43.1	-13.0	-30.1	
Mid Ch, 1880									
3760.00	-14.9	V	3.0	35.8	1.0	-49.7	-13.0	-36.7	
5640.00	-11.3	V	3.0	35.5	1.0	-45.7	-13.0	-32.7	
7520.00	-9.4	V	3.0	35.7	1.0	-44.1	-13.0	-31.1	
3760.00	-14.8	H	3.0	35.8	1.0	-49.6	-13.0	-36.6	
5640.00	-10.5	H	3.0	35.5	1.0	-45.0	-13.0	-32.0	
7520.00	-8.0	H	3.0	35.7	1.0	-42.8	-13.0	-29.8	
High Ch, 1900									
3800.00	-14.7	V	3.0	35.8	1.0	-49.5	-13.0	-36.5	
5700.00	-10.9	V	3.0	35.5	1.0	-45.4	-13.0	-32.4	
7600.00	-9.3	V	3.0	35.8	1.0	-44.0	-13.0	-31.0	
3800.00	-15.8	H	3.0	35.8	1.0	-50.6	-13.0	-37.6	
5700.00	-10.9	H	3.0	35.5	1.0	-45.4	-13.0	-32.4	
7600.00	-8.7	H	3.0	35.8	1.0	-43.4	-13.0	-30.4	

UL VERIFICATION SERVICES INC. FORM NO: CCSUP4701H
47173 BENICIA STREET, FREMONT, CA 94538, USA TEL: (510) 771-1000 FAX: (510) 661-0888
This report shall not be reproduced except in full, without the written approval of UL Verification Services Inc.

UL Verification Services, Inc.
Above 1GHz High Frequency Substitution Measurement

Company: LG
Project #: 15I21442
Date: 8/4/2015
Test Engineer: Jude Semana
Configuration: EUT + Charger + Headset
Location: Chamber C
Mode: LTE_QPSK Band 2 Harmonics, 20MHz Bandwidth

Band	f MHz	SG reading (dBm)	Ant. Pol. (H/V)	Distance (m)	Preamp (dB)	Filter (dB)	EIRP (dBm)	Limit (dBm)	Delta (dB)	Notes
	Low Ch, 1860									
LTE2	3720.00	-14.4	V	3.0	35.8	1.0	-49.3	-13.0	-36.3	
	5580.00	-10.9	V	3.0	35.5	1.0	-45.3	-13.0	-32.3	
20MHz	7440.00	-9.1	V	3.0	35.7	1.0	-43.9	-13.0	-30.9	
	3720.00	-14.9	H	3.0	35.8	1.0	-49.7	-13.0	-36.7	
QPSK	5580.00	-10.5	H	3.0	35.5	1.0	-45.0	-13.0	-32.0	
	7440.00	-8.4	H	3.0	35.7	1.0	-43.1	-13.0	-30.1	
	Mid Ch, 1880									
	3760.00	-14.7	V	3.0	35.8	1.0	-49.5	-13.0	-36.5	
	5640.00	-11.0	V	3.0	35.5	1.0	-45.5	-13.0	-32.5	
	7520.00	-9.2	V	3.0	35.7	1.0	-43.9	-13.0	-30.9	
	3760.00	-14.8	H	3.0	35.8	1.0	-49.6	-13.0	-36.6	
	5640.00	-10.3	H	3.0	35.5	1.0	-44.7	-13.0	-31.7	
	7520.00	-7.9	H	3.0	35.7	1.0	-42.6	-13.0	-29.6	
	High Ch, 1900									
	3800.00	-14.8	V	3.0	35.8	1.0	-49.6	-13.0	-36.6	
	5700.00	-10.9	V	3.0	35.5	1.0	-45.4	-13.0	-32.4	
	7600.00	-9.0	V	3.0	35.8	1.0	-43.8	-13.0	-30.8	
	3800.00	-15.2	H	3.0	35.8	1.0	-50.0	-13.0	-37.0	
	5700.00	-10.3	H	3.0	35.5	1.0	-44.8	-13.0	-31.8	
	7600.00	-8.5	H	3.0	35.8	1.0	-43.3	-13.0	-30.3	

UL VERIFICATION SERVICES INC. FORM NO: CCSUP4701H
47173 BENICIA STREET, FREMONT, CA 94538, USA TEL: (510) 771-1000 FAX: (510) 661-0888
This report shall not be reproduced except in full, without the written approval of UL Verification Services Inc.

UL Verification Services, Inc.
Above 1GHz High Frequency Substitution Measurement

Company: LG
Project #: 15I21442
Date: 8/4/2015
Test Engineer: Jude Semana
Configuration: EUT + Charger + Headset
Location: Chamber C
Mode: LTE_16QAM Band 2 Harmonics, 15MHz Bandwidth

Band	f MHz	SG reading (dBm)	Ant. Pol. (H/V)	Distance (m)	Preamp (dB)	Filter (dB)	EIRP (dBm)	Limit (dBm)	Delta (dB)	Notes
	Low Ch, 1857.5									
LTE2	3715.00	-14.9	V	3.0	35.8	1.0	-49.8	-13.0	-36.8	
	5572.50	-11.5	V	3.0	35.5	1.0	-46.0	-13.0	-33.0	
15MHz	7430.00	-9.6	V	3.0	35.7	1.0	-44.4	-13.0	-31.4	
	3715.00	-15.4	H	3.0	35.8	1.0	-50.3	-13.0	-37.3	
16QAM	5572.50	-10.7	H	3.0	35.5	1.0	-45.2	-13.0	-32.2	
	7430.00	-7.9	H	3.0	35.7	1.0	-42.6	-13.0	-29.6	
	Mid Ch, 1880									
	3760.00	-15.1	V	3.0	35.8	1.0	-49.9	-13.0	-36.9	
	5640.00	-11.6	V	3.0	35.5	1.0	-46.1	-13.0	-33.1	
	7520.00	-10.7	V	3.0	35.7	1.0	-45.5	-13.0	-32.5	
	3760.00	-15.7	H	3.0	35.8	1.0	-50.5	-13.0	-37.5	
	5640.00	-11.4	H	3.0	35.5	1.0	-45.9	-13.0	-32.9	
	7520.00	-7.6	H	3.0	35.7	1.0	-42.4	-13.0	-29.4	
	High Ch, 1902.5									
	3805.00	-15.2	V	3.0	35.8	1.0	-50.0	-13.0	-37.0	
	5707.50	-11.5	V	3.0	35.5	1.0	-46.0	-13.0	-33.0	
	7610.00	-9.3	V	3.0	35.8	1.0	-44.1	-13.0	-31.1	
	3805.00	-15.1	H	3.0	35.8	1.0	-49.9	-13.0	-36.9	
	5707.50	-10.1	H	3.0	35.5	1.0	-44.6	-13.0	-31.6	
	7610.00	-8.2	H	3.0	35.8	1.0	-42.9	-13.0	-29.9	

This report shall not be reproduced except in full, without the written approval of UL Verification Services Inc.

UL Verification Services, Inc.
Above 1GHz High Frequency Substitution Measurement

Company: LG
Project #: 15I21442
Date: 8/4/2015
Test Engineer: Jude Semana
Configuration: EUT + Charger + Headset
Location: Chamber C
Mode: LTE_QPSK Band 2 Harmonics, 15MHz Bandwidth

Band	f MHz	SG reading (dBm)	Ant. Pol. (H/V)	Distance (m)	Preamp (dB)	Filter (dB)	EIRP (dBm)	Limit (dBm)	Delta (dB)	Notes
	Low Ch, 1857.5									
LTE2	3715.00	-14.8	V	3.0	35.8	1.0	-49.6	-13.0	-36.6	
	5572.50	-11.4	V	3.0	35.5	1.0	-45.9	-13.0	-32.9	
15MHz	7430.00	-9.6	V	3.0	35.7	1.0	-44.4	-13.0	-31.4	
	3715.00	-15.4	H	3.0	35.8	1.0	-50.2	-13.0	-37.2	
QPSK	5572.50	-11.4	H	3.0	35.5	1.0	-45.8	-13.0	-32.8	
	7430.00	-7.7	H	3.0	35.7	1.0	-42.5	-13.0	-29.5	
	Mid Ch, 1880									
	3760.00	-14.9	V	3.0	35.8	1.0	-49.7	-13.0	-36.7	
	5640.00	-11.3	V	3.0	35.5	1.0	-45.8	-13.0	-32.8	
	7520.00	-9.2	V	3.0	35.7	1.0	-43.9	-13.0	-30.9	
	3760.00	-15.3	H	3.0	35.8	1.0	-50.1	-13.0	-37.1	
	5640.00	-11.2	H	3.0	35.5	1.0	-45.7	-13.0	-32.7	
	7520.00	-7.3	H	3.0	35.7	1.0	-42.0	-13.0	-29.0	
	High Ch, 1902.5									
	3805.00	-15.2	V	3.0	35.8	1.0	-50.0	-13.0	-37.0	
	5707.50	-11.3	V	3.0	35.5	1.0	-45.8	-13.0	-32.8	
	7610.00	-9.1	V	3.0	35.8	1.0	-43.8	-13.0	-30.8	
	3805.00	-15.0	H	3.0	35.8	1.0	-49.7	-13.0	-36.7	
	5707.50	-10.1	H	3.0	35.5	1.0	-44.6	-13.0	-31.6	
	7610.00	-7.7	H	3.0	35.8	1.0	-42.5	-13.0	-29.5	

UL VERIFICATION SERVICES INC. FORM NO: CCSUP4701H
47173 BENICIA STREET, FREMONT, CA 94538, USA TEL: (510) 771-1000 FAX: (510) 661-0888
This report shall not be reproduced except in full, without the written approval of UL Verification Services Inc.

UL Verification Services, Inc.
Above 1GHz High Frequency Substitution Measurement

Company: LG
Project #: 15I21442
Date: 8/4/2015
Test Engineer: Jude Semana
Configuration: EUT + Charger + Headset
Location: Chamber C
Mode: LTE_16QAM Band 2 Harmonics, 10MHz Bandwidth

Band: LTE2 10MHz 16QAM

f MHz	SG reading (dBm)	Ant. Pol. (H/V)	Distance (m)	Preamp (dB)	Filter (dB)	EIRP (dBm)	Limit (dBm)	Delta (dB)	Notes
Low Ch, 1855									
3710.00	-15.4	V	3.0	35.9	1.0	-50.3	-13.0	-37.3	
5565.00	-11.7	V	3.0	35.5	1.0	-46.2	-13.0	-33.2	
7420.00	-9.7	V	3.0	35.7	1.0	-44.5	-13.0	-31.5	
3710.00	-15.3	H	3.0	35.9	1.0	-50.1	-13.0	-37.1	
5565.00	-11.2	H	3.0	35.5	1.0	-45.7	-13.0	-32.7	
7420.00	-7.9	H	3.0	35.7	1.0	-42.7	-13.0	-29.7	
Mid Ch, 1880									
3760.00	-15.5	V	3.0	35.8	1.0	-50.3	-13.0	-37.3	
5640.00	-11.6	V	3.0	35.5	1.0	-46.0	-13.0	-33.0	
7520.00	-9.3	V	3.0	35.7	1.0	-44.1	-13.0	-31.1	
3760.00	-14.9	H	3.0	35.8	1.0	-49.7	-13.0	-36.7	
5640.00	-10.9	H	3.0	35.5	1.0	-45.4	-13.0	-32.4	
7520.00	-7.3	H	3.0	35.7	1.0	-42.0	-13.0	-29.0	
High Ch, 1905									
3810.00	-15.4	V	3.0	35.8	1.0	-50.1	-13.0	-37.1	
5715.00	-11.5	V	3.0	35.5	1.0	-46.0	-13.0	-33.0	
7620.00	-8.9	V	3.0	35.8	1.0	-43.7	-13.0	-30.7	
3810.00	-15.5	H	3.0	35.8	1.0	-50.2	-13.0	-37.2	
5715.00	-10.9	H	3.0	35.5	1.0	-45.4	-13.0	-32.4	
7620.00	-7.8	H	3.0	35.8	1.0	-42.5	-13.0	-29.5	

UL VERIFICATION SERVICES INC. FORM NO: CCSUP4701H
47173 BENICIA STREET, FREMONT, CA 94538, USA TEL: (510) 771-1000 FAX: (510) 661-0888
This report shall not be reproduced except in full, without the written approval of UL Verification Services Inc.

UL Verification Services, Inc.
Above 1GHz High Frequency Substitution Measurement

Company: LG
Project #: 15I21442
Date: 8/4/2015
Test Engineer: Jude Semana
Configuration: EUT + Charger + Headset
Location: Chamber C
Mode: LTE_QPSK Band 2 Harmonics, 10MHz Bandwidth

Band	f MHz	SG reading (dBm)	Ant. Pol. (H/V)	Distance (m)	Preamp (dB)	Filter (dB)	EIRP (dBm)	Limit (dBm)	Delta (dB)	Notes
	Low Ch, 1855									
LTE2	3710.00	-15.3	V	3.0	35.9	1.0	-50.1	-13.0	-37.1	
	5565.00	-11.7	V	3.0	35.5	1.0	-46.2	-13.0	-33.2	
10MHz	7420.00	-9.6	V	3.0	35.7	1.0	-44.4	-13.0	-31.4	
	3710.00	-15.4	H	3.0	35.9	1.0	-50.3	-13.0	-37.3	
QPSK	5565.00	-11.2	H	3.0	35.5	1.0	-45.7	-13.0	-32.7	
	7420.00	-7.4	H	3.0	35.7	1.0	-42.1	-13.0	-29.1	
	Mid Ch, 1880									
	3760.00	-15.0	V	3.0	35.8	1.0	-49.8	-13.0	-36.8	
	5640.00	-11.5	V	3.0	35.5	1.0	-46.0	-13.0	-33.0	
	7520.00	-9.2	V	3.0	35.7	1.0	-44.0	-13.0	-31.0	
	3760.00	-14.5	H	3.0	35.8	1.0	-49.4	-13.0	-36.4	
	5640.00	-11.0	H	3.0	35.5	1.0	-45.5	-13.0	-32.5	
	7520.00	-7.0	H	3.0	35.7	1.0	-41.8	-13.0	-28.8	
	High Ch, 1905									
	3810.00	-15.2	V	3.0	35.8	1.0	-50.0	-13.0	-37.0	
	5715.00	-11.5	V	3.0	35.5	1.0	-46.0	-13.0	-33.0	
	7620.00	-8.7	V	3.0	35.8	1.0	-43.5	-13.0	-30.5	
	3810.00	-15.1	H	3.0	35.8	1.0	-49.9	-13.0	-36.9	
	5715.00	-10.9	H	3.0	35.5	1.0	-45.4	-13.0	-32.4	
	7620.00	-8.1	H	3.0	35.8	1.0	-42.8	-13.0	-29.8	

This report shall not be reproduced except in full, without the written approval of UL Verification Services Inc.

UL Verification Services, Inc.
Above 1GHz High Frequency Substitution Measurement

Company: LG
Project #: 15I21442
Date: 8/4/2015
Test Engineer: Jude Semana
Configuration: EUT + Charger + Headset
Location: Chamber C
Mode: LTE_16QAM Band 2 Harmonics, 5MHz Bandwidth

Band: LTE2 5MHz 16QAM

f MHz	SG reading (dBm)	Ant. Pol. (H/V)	Distance (m)	Preamp (dB)	Filter (dB)	EIRP (dBm)	Limit (dBm)	Delta (dB)	Notes
Low Ch, 1852.5									
3705.00	-15.6	V	3.0	35.9	1.0	-50.5	-13.0	-37.5	
5557.50	-12.0	V	3.0	35.5	1.0	-46.5	-13.0	-33.5	
7410.00	-9.6	V	3.0	35.7	1.0	-44.3	-13.0	-31.3	
3705.00	-16.1	H	3.0	35.9	1.0	-51.0	-13.0	-38.0	
5557.50	-12.2	H	3.0	35.5	1.0	-46.7	-13.0	-33.7	
7410.00	-9.9	H	3.0	35.7	1.0	-44.6	-13.0	-31.6	
Mid Ch, 1880									
3760.00	-15.0	V	3.0	35.8	1.0	-49.8	-13.0	-36.8	
5640.00	-11.2	V	3.0	35.5	1.0	-45.7	-13.0	-32.7	
7520.00	-9.4	V	3.0	35.7	1.0	-44.1	-13.0	-31.1	
3760.00	-15.6	H	3.0	35.8	1.0	-50.4	-13.0	-37.4	
5640.00	-11.9	H	3.0	35.5	1.0	-46.4	-13.0	-33.4	
7520.00	-8.1	H	3.0	35.7	1.0	-42.8	-13.0	-29.8	
High Ch, 1907.5									
3815.00	-16.0	V	3.0	35.8	1.0	-50.8	-13.0	-37.8	
5722.50	-12.1	V	3.0	35.5	1.0	-46.6	-13.0	-33.6	
7630.00	-7.6	V	3.0	35.8	1.0	-42.4	-13.0	-29.4	
3815.00	-15.2	H	3.0	35.8	1.0	-50.0	-13.0	-37.0	
5722.50	-10.4	H	3.0	35.5	1.0	-44.9	-13.0	-31.9	
7630.00	-8.2	H	3.0	35.8	1.0	-42.9	-13.0	-29.9	

UL VERIFICATION SERVICES INC. FORM NO: CCSUP4701H
47173 BENICIA STREET, FREMONT, CA 94538, USA TEL: (510) 771-1000 FAX: (510) 661-0888
This report shall not be reproduced except in full, without the written approval of UL Verification Services Inc.

UL Verification Services, Inc.
Above 1GHz High Frequency Substitution Measurement

Company: LG
Project #: 15I21442
Date: 8/4/2015
Test Engineer: Jude Semana
Configuration: EUT + Charger + Headset
Location: Chamber C
Mode: LTE_QPSK Band 2 Harmonics, 5MHz Bandwidth

Band: LTE2 5MHz QPSK

f MHz	SG reading (dBm)	Ant. Pol. (H/V)	Distance (m)	Preamp (dB)	Filter (dB)	EIRP (dBm)	Limit (dBm)	Delta (dB)	Notes
Low Ch, 1852.5									
3705.00	-15.5	V	3.0	35.9	1.0	-50.4	-13.0	-37.4	
5557.50	-11.8	V	3.0	35.5	1.0	-46.3	-13.0	-33.3	
7410.00	-9.6	V	3.0	35.7	1.0	-44.4	-13.0	-31.4	
3705.00	-15.9	H	3.0	35.9	1.0	-50.8	-13.0	-37.8	
5557.50	-11.4	H	3.0	35.5	1.0	-45.9	-13.0	-32.9	
7410.00	-8.9	H	3.0	35.7	1.0	-43.6	-13.0	-30.6	
Mid Ch, 1880									
3760.00	-14.5	V	3.0	35.8	1.0	-49.3	-13.0	-36.3	
5640.00	-11.2	V	3.0	35.5	1.0	-45.6	-13.0	-32.6	
7520.00	-9.6	V	3.0	35.7	1.0	-44.3	-13.0	-31.3	
3760.00	-15.6	H	3.0	35.8	1.0	-50.4	-13.0	-37.4	
5640.00	-11.5	H	3.0	35.5	1.0	-46.0	-13.0	-33.0	
7520.00	-7.4	H	3.0	35.7	1.0	-42.2	-13.0	-29.2	
High Ch, 1907.5									
3815.00	-15.9	V	3.0	35.8	1.0	-50.7	-13.0	-37.7	
5722.50	-12.4	V	3.0	35.5	1.0	-46.9	-13.0	-33.9	
7630.00	-7.7	V	3.0	35.8	1.0	-42.4	-13.0	-29.4	
3815.00	-15.1	H	3.0	35.8	1.0	-49.9	-13.0	-36.9	
5722.50	-10.7	H	3.0	35.5	1.0	-45.2	-13.0	-32.2	
7630.00	-7.9	H	3.0	35.8	1.0	-42.7	-13.0	-29.7	

UL VERIFICATION SERVICES INC. FORM NO: CCSUP4701H
47173 BENICIA STREET, FREMONT, CA 94538, USA TEL: (510) 771-1000 FAX: (510) 661-0888
This report shall not be reproduced except in full, without the written approval of UL Verification Services Inc.

UL Verification Services, Inc.
Above 1GHz High Frequency Substitution Measurement

Company: LG
Project #: 15I21442
Date: 8/4/2015
Test Engineer: Jude Semana
Configuration: EUT + Charger + Headset
Location: Chamber C
Mode: LTE_16QAM Band 2 Harmonics, 3MHz Bandwidth

Band: LTE2 3MHz 16QAM

f MHz	SG reading (dBm)	Ant. Pol. (H/V)	Distance (m)	Preamp (dB)	Filter (dB)	EIRP (dBm)	Limit (dBm)	Delta (dB)	Notes
Low Ch, 1851.5									
3703.00	-15.8	V	3.0	35.9	1.0	-50.7	-13.0	-37.7	
5554.50	-12.4	V	3.0	35.5	1.0	-46.9	-13.0	-33.9	
7406.00	-9.9	V	3.0	35.7	1.0	-44.6	-13.0	-31.6	
3703.00	-15.6	H	3.0	35.9	1.0	-50.4	-13.0	-37.4	
5554.50	-11.1	H	3.0	35.5	1.0	-45.5	-13.0	-32.5	
7406.00	-8.9	H	3.0	35.7	1.0	-43.6	-13.0	-30.6	
Mid Ch, 1880									
3760.00	-14.9	V	3.0	35.8	1.0	-49.7	-13.0	-36.7	
5640.00	-11.2	V	3.0	35.5	1.0	-45.7	-13.0	-32.7	
7520.00	-9.7	V	3.0	35.7	1.0	-44.4	-13.0	-31.4	
3760.00	-15.4	H	3.0	35.8	1.0	-50.2	-13.0	-37.2	
5640.00	-10.8	H	3.0	35.5	1.0	-45.3	-13.0	-32.3	
7520.00	-8.5	H	3.0	35.7	1.0	-43.3	-13.0	-30.3	
High Ch, 1908.5									
3817.00	-15.4	V	3.0	35.8	1.0	-50.1	-13.0	-37.1	
5725.50	-12.0	V	3.0	35.5	1.0	-46.5	-13.0	-33.5	
7634.00	-9.7	V	3.0	35.8	1.0	-44.4	-13.0	-31.4	
3817.00	-16.0	H	3.0	35.8	1.0	-50.8	-13.0	-37.8	
5725.50	-11.2	H	3.0	35.5	1.0	-45.7	-13.0	-32.7	
7634.00	-8.7	H	3.0	35.8	1.0	-43.4	-13.0	-30.4	

UL VERIFICATION SERVICES INC. FORM NO: CCSUP4701H
47173 BENICIA STREET, FREMONT, CA 94538, USA TEL: (510) 771-1000 FAX: (510) 661-0888
This report shall not be reproduced except in full, without the written approval of UL Verification Services Inc.

UL Verification Services, Inc.
Above 1GHz High Frequency Substitution Measurement

Company: LG
Project #: 15I21442
Date: 8/4/2015
Test Engineer: Jude Semana
Configuration: EUT + Charger + Headset
Location: Chamber C
Mode: LTE_QPSK Band 2 Harmonics, 3MHz Bandwidth

Band	f MHz	SG reading (dBm)	Ant. Pol. (H/V)	Distance (m)	Preamp (dB)	Filter (dB)	EIRP (dBm)	Limit (dBm)	Delta (dB)	Notes
	Low Ch, 1851.5									
LTE2	3703.00	-15.9	V	3.0	35.9	1.0	-50.7	-13.0	-37.7	
	5554.50	-11.9	V	3.0	35.5	1.0	-46.4	-13.0	-33.4	
3MHz	7406.00	-9.7	V	3.0	35.7	1.0	-44.5	-13.0	-31.5	
	3703.00	-15.3	H	3.0	35.9	1.0	-50.2	-13.0	-37.2	
QPSK	5554.50	-10.8	H	3.0	35.5	1.0	-45.3	-13.0	-32.3	
	7406.00	-8.4	H	3.0	35.7	1.0	-43.2	-13.0	-30.2	
	Mid Ch, 1880									
	3760.00	-14.9	V	3.0	35.8	1.0	-49.7	-13.0	-36.7	
	5640.00	-11.6	V	3.0	35.5	1.0	-46.1	-13.0	-33.1	
	7520.00	-9.5	V	3.0	35.7	1.0	-44.2	-13.0	-31.2	
	3760.00	-15.4	H	3.0	35.8	1.0	-50.2	-13.0	-37.2	
	5640.00	-10.9	H	3.0	35.5	1.0	-45.4	-13.0	-32.4	
	7520.00	-8.2	H	3.0	35.7	1.0	-42.9	-13.0	-29.9	
	High Ch, 1908.5									
	3817.00	-15.5	V	3.0	35.8	1.0	-50.3	-13.0	-37.3	
	5725.50	-12.0	V	3.0	35.5	1.0	-46.5	-13.0	-33.5	
	7634.00	-9.6	V	3.0	35.8	1.0	-44.3	-13.0	-31.3	
	3817.00	-15.2	H	3.0	35.8	1.0	-50.0	-13.0	-37.0	
	5725.50	-10.5	H	3.0	35.5	1.0	-45.0	-13.0	-32.0	
	7634.00	-8.2	H	3.0	35.8	1.0	-42.9	-13.0	-29.9	

This report shall not be reproduced except in full, without the written approval of UL Verification Services Inc.

UL Verification Services, Inc.
Above 1GHz High Frequency Substitution Measurement

Company: LG
Project #: 15I21442
Date: 8/4/2015
Test Engineer: Jude Semana
Configuration: EUT + Charger + Headset
Location: Chamber C
Mode: LTE_16QAM Band 2 Harmonics, 1.4MHz Bandwidth

Band
LTE2
1.4MHz
16QAM

f MHz	SG reading (dBm)	Ant. Pol. (H/V)	Distance (m)	Preamp (dB)	Filter (dB)	EIRP (dBm)	Limit (dBm)	Delta (dB)	Notes
Low Ch, 1850.7									
3701.40	-16.4	V	3.0	35.9	1.0	-51.3	-13.0	-38.3	
5552.10	-12.3	V	3.0	35.5	1.0	-46.8	-13.0	-33.8	
7402.80	-10.5	V	3.0	35.7	1.0	-45.3	-13.0	-32.3	
3701.40	-15.9	H	3.0	35.9	1.0	-50.7	-13.0	-37.7	
5552.10	-10.9	H	3.0	35.5	1.0	-45.3	-13.0	-32.3	
7402.80	-8.3	H	3.0	35.7	1.0	-43.0	-13.0	-30.0	
Mid Ch, 1880									
3760.00	-15.0	V	3.0	35.8	1.0	-49.8	-13.0	-36.8	
5640.00	-10.7	V	3.0	35.5	1.0	-45.1	-13.0	-32.1	
7520.00	-8.6	V	3.0	35.7	1.0	-43.3	-13.0	-30.3	
3760.00	-15.3	H	3.0	35.8	1.0	-50.1	-13.0	-37.1	
5640.00	-11.8	H	3.0	35.5	1.0	-46.3	-13.0	-33.3	
7520.00	-8.7	H	3.0	35.7	1.0	-43.4	-13.0	-30.4	
High Ch, 1909.3									
3818.60	-15.3	V	3.0	35.8	1.0	-50.0	-13.0	-37.0	
5727.90	-11.3	V	3.0	35.5	1.0	-45.8	-13.0	-32.8	
7637.20	-9.6	V	3.0	35.8	1.0	-44.3	-13.0	-31.3	
3818.60	-15.1	H	3.0	35.8	1.0	-49.8	-13.0	-36.8	
5727.90	-11.5	H	3.0	35.5	1.0	-46.0	-13.0	-33.0	
7637.20	-8.5	H	3.0	35.8	1.0	-43.3	-13.0	-30.3	

This report shall not be reproduced except in full, without the written approval of UL Verification Services Inc.

UL Verification Services, Inc.
Above 1GHz High Frequency Substitution Measurement

Company: LG
Project #: 15I21442
Date: 8/4/2015
Test Engineer: Jude Semana
Configuration: EUT + Charger + Headset
Location: Chamber C
Mode: LTE_QPSK Band 2 Harmonics, 1.4MHz Bandwidth

Band	f MHz	SG reading (dBm)	Ant. Pol. (H/V)	Distance (m)	Preamp (dB)	Filter (dB)	EIRP (dBm)	Limit (dBm)	Delta (dB)	Notes
	Low Ch, 1850.7									
LTE2	3701.40	-16.3	V	3.0	35.9	1.0	-51.1	-13.0	-38.1	
	5552.10	-12.3	V	3.0	35.5	1.0	-46.8	-13.0	-33.8	
1.4MHz	7402.80	-10.0	V	3.0	35.7	1.0	-44.7	-13.0	-31.7	
	3701.40	-16.2	H	3.0	35.9	1.0	-51.1	-13.0	-38.1	
QPSK	5552.10	-10.8	H	3.0	35.5	1.0	-45.3	-13.0	-32.3	
	7402.80	-8.2	H	3.0	35.7	1.0	-42.9	-13.0	-29.9	
	Mid Ch, 1880									
	3760.00	-15.3	V	3.0	35.8	1.0	-50.1	-13.0	-37.1	
	5640.00	-10.5	V	3.0	35.5	1.0	-45.0	-13.0	-32.0	
	7520.00	-8.7	V	3.0	35.7	1.0	-43.4	-13.0	-30.4	
	3760.00	-15.2	H	3.0	35.8	1.0	-50.0	-13.0	-37.0	
	5640.00	-11.1	H	3.0	35.5	1.0	-45.6	-13.0	-32.6	
	7520.00	-8.6	H	3.0	35.7	1.0	-43.3	-13.0	-30.3	
	High Ch, 1909.3									
	3818.60	-15.2	V	3.0	35.8	1.0	-50.0	-13.0	-37.0	
	5727.90	-11.5	V	3.0	35.5	1.0	-46.0	-13.0	-33.0	
	7637.20	-9.0	V	3.0	35.8	1.0	-43.8	-13.0	-30.8	
	3818.60	-15.1	H	3.0	35.8	1.0	-49.9	-13.0	-36.9	
	5727.90	-11.2	H	3.0	35.5	1.0	-45.7	-13.0	-32.7	
	7637.20	-8.1	H	3.0	35.8	1.0	-42.8	-13.0	-29.8	

UL VERIFICATION SERVICES INC. FORM NO: CCSUP4701H
47173 BENICIA STREET, FREMONT, CA 94538, USA TEL: (510) 771-1000 FAX: (510) 661-0888
This report shall not be reproduced except in full, without the written approval of UL Verification Services Inc.

LTE Band 4

Band

LTE4

20MHz

16QAM

UL Verification Services, Inc.
Above 1GHz High Frequency Substitution Measurement

Company: LG
Project #: 15I21442
Date: 8/4/2015
Test Engineer: G. Escano
Configuration: EUT + AC Adapter + HS
Location: Chamber A
Mode: LTE_16QAM Band 4 Harmonics, 20MHz Bandwidth

f MHz	SG reading (dBm)	Ant. Pol. (H/V)	Distance (m)	Preamp (dB)	Filter (dB)	EIRP (dBm)	Limit (dBm)	Delta (dB)	Notes
Low Ch, 1720									
3440.00	-13.8	V	3.0	36.0	1.0	-48.9	-13.0	-35.9	
5160.00	-17.5	V	3.0	35.4	1.0	-51.9	-13.0	-38.9	
6880.00	-12.2	V	3.0	35.7	1.0	-46.9	-13.0	-33.9	
3440.00	-16.0	H	3.0	36.0	1.0	-51.1	-13.0	-38.1	
5160.00	-16.4	H	3.0	35.4	1.0	-50.9	-13.0	-37.9	
6880.00	-13.6	H	3.0	35.7	1.0	-48.2	-13.0	-35.2	
Mid Ch, 1732.5									
3465.00	-13.3	V	3.0	36.0	1.0	-48.3	-13.0	-35.3	
5197.50	-18.1	V	3.0	35.4	1.0	-52.5	-13.0	-39.5	
6930.00	-9.4	V	3.0	35.7	1.0	-44.0	-13.0	-31.0	
3465.00	-15.4	H	3.0	36.0	1.0	-50.4	-13.0	-37.4	
5197.50	-16.1	H	3.0	35.4	1.0	-50.5	-13.0	-37.5	
6930.00	-13.2	H	3.0	35.7	1.0	-47.8	-13.0	-34.8	
High Ch, 1745									
3490.00	-17.6	V	3.0	36.0	1.0	-52.6	-13.0	-39.6	
5235.00	-17.1	V	3.0	35.4	1.0	-51.5	-13.0	-38.5	
6980.00	-8.6	V	3.0	35.7	1.0	-43.3	-13.0	-30.3	
3490.00	-18.8	H	3.0	36.0	1.0	-53.8	-13.0	-40.8	
5235.00	-17.4	H	3.0	35.4	1.0	-51.8	-13.0	-38.8	
6980.00	-13.9	H	3.0	35.7	1.0	-48.6	-13.0	-35.6	

UL VERIFICATION SERVICES INC. FORM NO: CCSUP4701H
47173 BENICIA STREET, FREMONT, CA 94538, USA TEL: (510) 771-1000 FAX: (510) 661-0888

This report shall not be reproduced except in full, without the written approval of UL Verification Services Inc.

Band

LTE4

20MHz

QPSK

UL Verification Services, Inc.
Above 1GHz High Frequency Substitution Measurement

Company: LG
Project #: 15I21442
Date: 8/4/2015
Test Engineer: G. Escano
Configuration: EUT + AC Adapter + HS
Location: Chamber A
Mode: LTE_QPSK Band 4 Harmonics, 20MHz Bandwidth

f MHz	SG reading (dBm)	Ant. Pol. (H/V)	Distance (m)	Preamp (dB)	Filter (dB)	EIRP (dBm)	Limit (dBm)	Delta (dB)	Notes
Low Ch, 1720									
3440.00	-13.1	V	3.0	36.0	1.0	-48.2	-13.0	-35.2	
5160.00	-17.5	V	3.0	35.4	1.0	-51.9	-13.0	-38.9	
6880.00	-12.0	V	3.0	35.7	1.0	-46.7	-13.0	-33.7	
3440.00	-15.5	H	3.0	36.0	1.0	-50.6	-13.0	-37.6	
5160.00	-16.3	H	3.0	35.4	1.0	-50.8	-13.0	-37.8	
6880.00	-11.9	H	3.0	35.7	1.0	-46.6	-13.0	-33.6	
Mid Ch, 1732.5									
3465.00	-12.5	V	3.0	36.0	1.0	-47.5	-13.0	-34.5	
5197.50	-17.4	V	3.0	35.4	1.0	-51.8	-13.0	-38.8	
6930.00	-8.2	V	3.0	35.7	1.0	-42.9	-13.0	-29.9	
3465.00	-15.3	H	3.0	36.0	1.0	-50.3	-13.0	-37.3	
5197.50	-15.9	H	3.0	35.4	1.0	-50.4	-13.0	-37.4	
6930.00	-11.2	H	3.0	35.7	1.0	-45.8	-13.0	-32.8	
High Ch, 1745									
3490.00	-16.9	V	3.0	36.0	1.0	-51.9	-13.0	-38.9	
5235.00	-16.9	V	3.0	35.4	1.0	-51.3	-13.0	-38.3	
6980.00	-8.2	V	3.0	35.7	1.0	-42.9	-13.0	-29.9	
3490.00	-18.5	H	3.0	36.0	1.0	-53.5	-13.0	-40.5	
5235.00	-16.9	H	3.0	35.4	1.0	-51.3	-13.0	-38.3	
6980.00	-13.2	H	3.0	35.7	1.0	-47.9	-13.0	-34.9	

UL VERIFICATION SERVICES INC. FORM NO: CCSUP4701H
47173 BENICIA STREET, FREMONT, CA 94538, USA TEL: (510) 771-1000 FAX: (510) 661-0888

This report shall not be reproduced except in full, without the written approval of UL Verification Services Inc.

UL Verification Services, Inc.
Above 1GHz High Frequency Substitution Measurement

Company: LG
Project #: 15I21442
Date: 8/4/2015
Test Engineer: G. Escano
Configuration: EUT + AC Adapter + HS
Location: Chamber A
Mode: LTE_16QAM Band 4 Harmonics, 15MHz Bandwidth

Band
LTE4
15MHz
16QAM

f MHz	SG reading (dBm)	Ant. Pol. (H/V)	Distance (m)	Preamp (dB)	Filter (dB)	EIRP (dBm)	Limit (dBm)	Delta (dB)	Notes
Low Ch, 1717.5									
3435.00	-14.4	V	3.0	36.1	1.0	-49.4	-13.0	-36.4	
5152.50	-17.5	V	3.0	35.4	1.0	-51.9	-13.0	-38.9	
6870.00	-17.5	V	3.0	35.7	1.0	-52.1	-13.0	-39.1	
3435.00	-17.2	H	3.0	36.1	1.0	-52.2	-13.0	-39.2	
5152.50	-17.0	H	3.0	35.4	1.0	-51.4	-13.0	-38.4	
6870.00	-16.1	H	3.0	35.7	1.0	-50.7	-13.0	-37.7	
Mid Ch, 1732.5									
3465.00	-13.1	V	3.0	36.0	1.0	-48.1	-13.0	-35.1	
5197.50	-18.1	V	3.0	35.4	1.0	-52.5	-13.0	-39.5	
6930.00	-16.2	V	3.0	35.7	1.0	-50.8	-13.0	-37.8	
3465.00	-18.0	H	3.0	36.0	1.0	-53.1	-13.0	-40.1	
5197.50	-17.5	H	3.0	35.4	1.0	-51.9	-13.0	-38.9	
6930.00	-14.8	H	3.0	35.7	1.0	-49.5	-13.0	-36.5	
High Ch, 1747.5									
3495.00	-16.8	V	3.0	36.0	1.0	-51.8	-13.0	-38.8	
5242.50	-7.2	V	3.0	35.4	1.0	-41.7	-13.0	-28.7	
6990.00	-17.2	V	3.0	35.7	1.0	-51.9	-13.0	-38.9	
3495.00	-19.1	H	3.0	36.0	1.0	-54.1	-13.0	-41.1	
5242.50	-16.4	H	3.0	35.4	1.0	-50.8	-13.0	-37.8	
6990.00	-15.8	H	3.0	35.7	1.0	-50.5	-13.0	-37.5	

UL VERIFICATION SERVICES INC. FORM NO: CCSUP4701H
47173 BENICIA STREET, FREMONT, CA 94538, USA TEL: (510) 771-1000 FAX: (510) 661-0888
This report shall not be reproduced except in full, without the written approval of UL Verification Services Inc.

UL Verification Services, Inc.
Above 1GHz High Frequency Substitution Measurement

Company: LG
Project #: 15I21442
Date: 8/4/2015
Test Engineer: G. Escano
Configuration: EUT + AC Adapter + HS
Location: Chamber A
Mode: LTE_QPSK Band 4 Harmonics, 15MHz Bandwidth

Band LTE4 15MHz QPSK

f MHz	SG reading (dBm)	Ant. Pol. (H/V)	Distance (m)	Preamp (dB)	Filter (dB)	EIRP (dBm)	Limit (dBm)	Delta (dB)	Notes
Low Ch, 1717.5									
3435.00	-13.4	V	3.0	36.1	1.0	-48.4	-13.0	-35.4	
5152.50	-16.6	V	3.0	35.4	1.0	-51.1	-13.0	-38.1	
6870.00	-17.0	V	3.0	35.7	1.0	-51.7	-13.0	-38.7	
3435.00	-16.2	H	3.0	36.1	1.0	-51.2	-13.0	-38.2	
5152.50	-16.5	H	3.0	35.4	1.0	-51.0	-13.0	-38.0	
6870.00	-14.8	H	3.0	35.7	1.0	-49.5	-13.0	-36.5	
Mid Ch, 1732.5									
3465.00	-12.4	V	3.0	36.0	1.0	-47.4	-13.0	-34.4	
5197.50	-17.2	V	3.0	35.4	1.0	-51.6	-13.0	-38.6	
6930.00	-15.5	V	3.0	35.7	1.0	-50.2	-13.0	-37.2	
3465.00	-17.3	H	3.0	36.0	1.0	-52.4	-13.0	-39.4	
5197.50	-17.5	H	3.0	35.4	1.0	-51.9	-13.0	-38.9	
6930.00	-14.4	H	3.0	35.7	1.0	-49.1	-13.0	-36.1	
High Ch, 1747.5									
3495.00	-15.6	V	3.0	36.0	1.0	-50.6	-13.0	-37.6	
5242.50	-16.8	V	3.0	35.4	1.0	-51.2	-13.0	-38.2	
6990.00	-16.2	V	3.0	35.7	1.0	-50.8	-13.0	-37.8	
3495.00	-18.0	H	3.0	36.0	1.0	-53.0	-13.0	-40.0	
5242.50	-17.1	H	3.0	35.4	1.0	-51.6	-13.0	-38.6	
6990.00	-14.8	H	3.0	35.7	1.0	-49.5	-13.0	-36.5	

UL VERIFICATION SERVICES INC. FORM NO: CCSUP4701H
47173 BENICIA STREET, FREMONT, CA 94538, USA TEL: (510) 771-1000 FAX: (510) 661-0888
This report shall not be reproduced except in full, without the written approval of UL Verification Services Inc.

UL Verification Services, Inc.
Above 1GHz High Frequency Substitution Measurement

Company: LG
Project #: 15I21442
Date: 8/4/2015
Test Engineer: G. Escano
Configuration: EUT + AC Adapter + HS
Location: Chamber A
Mode: LTE_16QAM Band 4 Harmonics, 10MHz Bandwidth

Band
LTE4
10MHz
16QAM

f MHz	SG reading (dBm)	Ant. Pol. (H/V)	Distance (m)	Preamp (dB)	Filter (dB)	EIRP (dBm)	Limit (dBm)	Delta (dB)	Notes
Low Ch, 1715									
3430.00	-14.3	V	3.0	36.1	1.0	-49.3	-13.0	-36.3	
5145.00	-16.2	V	3.0	35.4	1.0	-50.6	-13.0	-37.6	
6860.00	-11.8	V	3.0	35.7	1.0	-46.4	-13.0	-33.4	
3430.00	-16.2	H	3.0	36.1	1.0	-51.3	-13.0	-38.3	
5145.00	-16.7	H	3.0	35.4	1.0	-51.1	-13.0	-38.1	
6860.00	-14.0	H	3.0	35.7	1.0	-48.7	-13.0	-35.7	
Mid Ch, 1732.5									
3465.00	-13.8	V	3.0	36.0	1.0	-48.8	-13.0	-35.8	
5197.50	-17.4	V	3.0	35.4	1.0	-51.8	-13.0	-38.8	
6930.00	-6.7	V	3.0	35.7	1.0	-41.4	-13.0	-28.4	
3465.00	-15.7	H	3.0	36.0	1.0	-50.7	-13.0	-37.7	
5197.50	-16.8	H	3.0	35.4	1.0	-51.2	-13.0	-38.2	
6930.00	-10.9	H	3.0	35.7	1.0	-45.5	-13.0	-32.5	
High Ch, 1750									
3500.00	-17.1	V	3.0	36.0	1.0	-52.1	-13.0	-39.1	
5250.00	-18.1	V	3.0	35.4	1.0	-52.6	-13.0	-39.6	
7000.00	-12.1	V	3.0	35.7	1.0	-46.8	-13.0	-33.8	
3500.00	-18.2	H	3.0	36.0	1.0	-53.2	-13.0	-40.2	
5250.00	-17.1	H	3.0	35.4	1.0	-51.5	-13.0	-38.5	
7000.00	-15.7	H	3.0	35.7	1.0	-50.4	-13.0	-37.4	

This report shall not be reproduced except in full, without the written approval of UL Verification Services Inc.

Band

LTE4

10MHz

QPSK

UL Verification Services, Inc.
Above 1GHz High Frequency Substitution Measurement

Company: LG
Project #: 15I21442
Date: 8/4/2015
Test Engineer: G. Escano
Configuration: EUT + AC Adapter + HS
Location: Chamber A
Mode: LTE_QPSK Band 4 Harmonics, 10MHz Bandwidth

f MHz	SG reading (dBm)	Ant. Pol. (H/V)	Distance (m)	Preamp (dB)	Filter (dB)	EIRP (dBm)	Limit (dBm)	Delta (dB)	Notes
Low Ch, 1715									
3430.00	-14.1	V	3.0	36.1	1.0	-49.1	-13.0	-36.1	
5145.00	-15.7	V	3.0	35.4	1.0	-50.2	-13.0	-37.2	
6860.00	-11.6	V	3.0	35.7	1.0	-46.3	-13.0	-33.3	
3430.00	-16.3	H	3.0	36.1	1.0	-51.3	-13.0	-38.3	
5145.00	-16.7	H	3.0	35.4	1.0	-51.2	-13.0	-38.2	
6860.00	-13.5	H	3.0	35.7	1.0	-48.1	-13.0	-35.1	
Mid Ch, 1732.5									
3465.00	-13.2	V	3.0	36.0	1.0	-48.2	-13.0	-35.2	
5197.50	-16.8	V	3.0	35.4	1.0	-51.2	-13.0	-38.2	
6930.00	-6.5	V	3.0	35.7	1.0	-41.2	-13.0	-28.2	
3465.00	-17.4	H	3.0	36.0	1.0	-52.4	-13.0	-39.4	
5197.50	-16.3	H	3.0	35.4	1.0	-50.7	-13.0	-37.7	
6930.00	-11.1	H	3.0	35.7	1.0	-45.8	-13.0	-32.8	
High Ch, 1750									
3500.00	-16.9	V	3.0	36.0	1.0	-51.9	-13.0	-38.9	
5250.00	-18.7	V	3.0	35.4	1.0	-53.2	-13.0	-40.2	
7000.00	-11.3	V	3.0	35.7	1.0	-46.0	-13.0	-33.0	
3500.00	-18.0	H	3.0	36.0	1.0	-53.0	-13.0	-40.0	
5250.00	-17.4	H	3.0	35.4	1.0	-51.8	-13.0	-38.8	
7000.00	-16.0	H	3.0	35.7	1.0	-50.7	-13.0	-37.7	

UL VERIFICATION SERVICES INC. FORM NO: CCSUP4701H
47173 BENICIA STREET, FREMONT, CA 94538, USA TEL: (510) 771-1000 FAX: (510) 661-0888

This report shall not be reproduced except in full, without the written approval of UL Verification Services Inc.

UL Verification Services, Inc.
Above 1GHz High Frequency Substitution Measurement

Company: LG
Project #: 15I21442
Date: 8/4/2015
Test Engineer: G. Escano
Configuration: EUT + AC Adapter + HS
Location: Chamber A
Mode: LTE_16QAM Band 4 Harmonics, 5MHz Bandwidth

Band
LTE4
5MHz
16QAM

f MHz	SG reading (dBm)	Ant. Pol. (H/V)	Distance (m)	Preamp (dB)	Filter (dB)	EIRP (dBm)	Limit (dBm)	Delta (dB)	Notes
Low Ch, 1712.5									
3425.00	-17.4	V	3.0	36.1	1.0	-52.5	-13.0	-39.5	
5137.50	-9.5	V	3.0	35.4	1.0	-43.9	-13.0	-30.9	
6850.00	-14.9	V	3.0	35.7	1.0	-49.6	-13.0	-36.6	
3425.00	-15.9	H	3.0	36.1	1.0	-50.9	-13.0	-37.9	
5137.50	-16.7	H	3.0	35.4	1.0	-51.1	-13.0	-38.1	
6850.00	-13.8	H	3.0	35.7	1.0	-48.5	-13.0	-35.5	
Mid Ch, 1732.5									
3465.00	-13.7	V	3.0	36.0	1.0	-48.8	-13.0	-35.8	
5197.50	-17.8	V	3.0	35.4	1.0	-52.3	-13.0	-39.3	
6930.00	-7.1	V	3.0	35.7	1.0	-41.8	-13.0	-28.8	
3465.00	-15.9	H	3.0	36.0	1.0	-50.9	-13.0	-37.9	
5197.50	-17.3	H	3.0	35.4	1.0	-51.8	-13.0	-38.8	
6930.00	-12.0	H	3.0	35.7	1.0	-46.7	-13.0	-33.7	
High Ch, 1752.5									
3505.00	-16.0	V	3.0	36.0	1.0	-51.0	-13.0	-38.0	
5257.50	-18.7	V	3.0	35.4	1.0	-53.2	-13.0	-40.2	
7010.00	-12.1	V	3.0	35.7	1.0	-46.8	-13.0	-33.8	
3505.00	-20.5	H	3.0	36.0	1.0	-55.5	-13.0	-42.5	
5257.50	-17.3	H	3.0	35.4	1.0	-51.8	-13.0	-38.8	
7010.00	-15.8	H	3.0	35.7	1.0	-50.5	-13.0	-37.5	

UL VERIFICATION SERVICES INC. FORM NO: CCSUP4701H
47173 BENICIA STREET, FREMONT, CA 94538, USA TEL: (510) 771-1000 FAX: (510) 661-0888
This report shall not be reproduced except in full, without the written approval of UL Verification Services Inc.

UL Verification Services, Inc.
Above 1GHz High Frequency Substitution Measurement

Company: LG
Project #: 15I21442
Date: 8/4/2015
Test Engineer: G. Escano
Configuration: EUT + AC Adapter + HS
Location: Chamber A
Mode: LTE_QPSK Band 4 Harmonics, 5MHz Bandwidth

Band LTE4 5MHz QPSK

f MHz	SG reading (dBm)	Ant. Pol. (H/V)	Distance (m)	Preamp (dB)	Filter (dB)	EIRP (dBm)	Limit (dBm)	Delta (dB)	Notes
Low Ch, 1712.5									
3425.00	-16.8	V	3.0	36.1	1.0	-51.9	-13.0	-38.9	
5137.50	-9.1	V	3.0	35.4	1.0	-43.5	-13.0	-30.5	
6850.00	-13.4	V	3.0	35.7	1.0	-48.1	-13.0	-35.1	
3425.00	-15.6	H	3.0	36.1	1.0	-50.7	-13.0	-37.7	
5137.50	-16.5	H	3.0	35.4	1.0	-50.9	-13.0	-37.9	
6850.00	-12.1	H	3.0	35.7	1.0	-46.7	-13.0	-33.7	
Mid Ch, 1732.5									
3465.00	-12.9	V	3.0	36.0	1.0	-47.9	-13.0	-34.9	
5197.50	-15.6	V	3.0	35.4	1.0	-50.1	-13.0	-37.1	
6930.00	-6.4	V	3.0	35.7	1.0	-41.1	-13.0	-28.1	
3465.00	-15.9	H	3.0	36.0	1.0	-51.0	-13.0	-38.0	
5197.50	-16.6	H	3.0	35.4	1.0	-51.0	-13.0	-38.0	
6930.00	-12.4	H	3.0	35.7	1.0	-47.1	-13.0	-34.1	
High Ch, 1752.5									
3505.00	-15.9	V	3.0	36.0	1.0	-50.9	-13.0	-37.9	
5257.50	-18.0	V	3.0	35.4	1.0	-52.4	-13.0	-39.4	
7010.00	-12.5	V	3.0	35.7	1.0	-47.2	-13.0	-34.2	
3505.00	-20.0	H	3.0	36.0	1.0	-55.0	-13.0	-42.0	
5257.50	-17.5	H	3.0	35.4	1.0	-52.0	-13.0	-39.0	
7010.00	-14.7	H	3.0	35.7	1.0	-49.4	-13.0	-36.4	

UL VERIFICATION SERVICES INC. FORM NO: CCSUP4701H
47173 BENICIA STREET, FREMONT, CA 94538, USA TEL: (510) 771-1000 FAX: (510) 661-0888
This report shall not be reproduced except in full, without the written approval of UL Verification Services Inc.

UL Verification Services, Inc.
Above 1GHz High Frequency Substitution Measurement

Company: LG
Project #: 15I21442
Date: 8/4/2015
Test Engineer: Jude Semana
Configuration: EUT + Charger + Headset
Location: Chamber C
Mode: LTE_16QAM Band 4 Harmonics, 3MHz Bandwidth

Band
LTE4
3MHz
16QAM

f MHz	SG reading (dBm)	Ant. Pol. (H/V)	Distance (m)	Preamp (dB)	Filter (dB)	EIRP (dBm)	Limit (dBm)	Delta (dB)	Notes
Low Ch, 1711.5									
3423.00	-15.5	V	3.0	36.1	1.0	-50.6	-13.0	-37.6	
5134.50	-11.5	V	3.0	35.4	1.0	-46.0	-13.0	-33.0	
6846.00	-9.0	V	3.0	35.7	1.0	-43.6	-13.0	-30.6	
3423.00	-14.5	H	3.0	36.1	1.0	-49.5	-13.0	-36.5	
5134.50	-11.4	H	3.0	35.4	1.0	-45.9	-13.0	-32.9	
6846.00	-8.6	H	3.0	35.7	1.0	-43.3	-13.0	-30.3	
Mid Ch, 1732.5									
3465.00	-15.4	V	3.0	36.0	1.0	-50.4	-13.0	-37.4	
5197.50	-11.4	V	3.0	35.4	1.0	-45.9	-13.0	-32.9	
6930.00	-8.5	V	3.0	35.7	1.0	-43.1	-13.0	-30.1	
3465.00	-14.1	H	3.0	36.0	1.0	-49.1	-13.0	-36.1	
5197.50	-10.8	H	3.0	35.4	1.0	-45.2	-13.0	-32.2	
6930.00	-8.2	H	3.0	35.7	1.0	-42.9	-13.0	-29.9	
High Ch, 1753.5									
3507.00	-15.2	V	3.0	36.0	1.0	-50.2	-13.0	-37.2	
5260.50	-10.3	V	3.0	35.4	1.0	-44.7	-13.0	-31.7	
7014.00	-7.6	V	3.0	35.7	1.0	-42.3	-13.0	-29.3	
3507.00	-14.5	H	3.0	36.0	1.0	-49.5	-13.0	-36.5	
5260.50	-10.8	H	3.0	35.4	1.0	-45.2	-13.0	-32.2	
7014.00	-9.1	H	3.0	35.7	1.0	-43.8	-13.0	-30.8	

UL VERIFICATION SERVICES INC. FORM NO: CCSUP4701H
47173 BENICIA STREET, FREMONT, CA 94538, USA TEL: (510) 771-1000 FAX: (510) 661-0888
This report shall not be reproduced except in full, without the written approval of UL Verification Services Inc.

UL Verification Services, Inc.
Above 1GHz High Frequency Substitution Measurement

Company: LG
Project #: 15I21442
Date: 8/4/2015
Test Engineer: Jude Semana
Configuration: EUT + Charger + Headset
Location: Chamber C
Mode: LTE_QPSK Band 4 Harmonics, 3MHz Bandwidth

Band
LTE4
3MHz
QPSK

f MHz	SG reading (dBm)	Ant. Pol. (H/V)	Distance (m)	Preamp (dB)	Filter (dB)	EIRP (dBm)	Limit (dBm)	Delta (dB)	Notes
Low Ch, 1711.5									
3423.00	-15.1	V	3.0	36.1	1.0	-50.2	-13.0	-37.2	
5134.50	-11.3	V	3.0	35.4	1.0	-45.8	-13.0	-32.8	
6846.00	-8.6	V	3.0	35.7	1.0	-43.2	-13.0	-30.2	
3423.00	-14.0	H	3.0	36.1	1.0	-49.1	-13.0	-36.1	
5134.50	-10.9	H	3.0	35.4	1.0	-45.3	-13.0	-32.3	
6846.00	-8.1	H	3.0	35.7	1.0	-42.7	-13.0	-29.7	
Mid Ch, 1732.5									
3465.00	-15.0	V	3.0	36.0	1.0	-50.0	-13.0	-37.0	
5197.50	-11.2	V	3.0	35.4	1.0	-45.7	-13.0	-32.7	
6930.00	-8.3	V	3.0	35.7	1.0	-42.9	-13.0	-29.9	
3465.00	-13.7	H	3.0	36.0	1.0	-48.7	-13.0	-35.7	
5197.50	-10.5	H	3.0	35.4	1.0	-44.9	-13.0	-31.9	
6930.00	-7.7	H	3.0	35.7	1.0	-42.4	-13.0	-29.4	
High Ch, 1753.5									
3507.00	-14.8	V	3.0	36.0	1.0	-49.8	-13.0	-36.8	
5260.50	-9.9	V	3.0	35.4	1.0	-44.3	-13.0	-31.3	
7014.00	-7.7	V	3.0	35.7	1.0	-42.4	-13.0	-29.4	
3507.00	-14.1	H	3.0	36.0	1.0	-49.1	-13.0	-36.1	
5260.50	-10.5	H	3.0	35.4	1.0	-45.0	-13.0	-32.0	
7014.00	-7.7	H	3.0	35.7	1.0	-42.4	-13.0	-29.4	

UL VERIFICATION SERVICES INC. FORM NO: CCSUP4701H
47173 BENICIA STREET, FREMONT, CA 94538, USA TEL: (510) 771-1000 FAX: (510) 661-0888
This report shall not be reproduced except in full, without the written approval of UL Verification Services Inc.

Band

LTE4

1.4MHz

16QAM

UL Verification Services, Inc.
Above 1GHz High Frequency Substitution Measurement

Company: LG
Project #: 15I21442
Date: 8/4/2015
Test Engineer: Jude Semana
Configuration: EUT + Charger + Headset
Location: Chamber C
Mode: LTE_16QAM Band 4 Harmonics, 1.4MHz Bandwidth

f MHz	SG reading (dBm)	Ant. Pol. (H/V)	Distance (m)	Preamp (dB)	Filter (dB)	EIRP (dBm)	Limit (dBm)	Delta (dB)	Notes
Low Ch, 1710.7									
3421.40	-15.6	V	3.0	36.1	1.0	-50.7	-13.0	-37.7	
5132.10	-12.5	V	3.0	35.4	1.0	-46.9	-13.0	-33.9	
6842.80	-7.4	V	3.0	35.7	1.0	-42.1	-13.0	-29.1	
3421.40	-15.0	H	3.0	36.1	1.0	-50.1	-13.0	-37.1	
5132.10	-11.2	H	3.0	35.4	1.0	-45.6	-13.0	-32.6	
6842.80	-9.0	H	3.0	35.7	1.0	-43.6	-13.0	-30.6	
Mid Ch, 1732.5									
3465.00	-15.5	V	3.0	36.0	1.0	-50.6	-13.0	-37.6	
5197.50	-12.4	V	3.0	35.4	1.0	-46.8	-13.0	-33.8	
6930.00	-6.8	V	3.0	35.7	1.0	-41.4	-13.0	-28.4	
3465.00	-15.9	H	3.0	36.0	1.0	-50.9	-13.0	-37.9	
5197.50	-10.6	H	3.0	35.4	1.0	-45.0	-13.0	-32.0	
6930.00	-10.4	H	3.0	35.7	1.0	-45.0	-13.0	-32.0	
High Ch, 1754.3									
3508.60	-16.4	V	3.0	36.0	1.0	-51.4	-13.0	-38.4	
5262.90	-10.6	V	3.0	35.4	1.0	-45.0	-13.0	-32.0	
7017.20	-9.0	V	3.0	35.7	1.0	-43.7	-13.0	-30.7	
3508.60	-14.3	H	3.0	36.0	1.0	-49.3	-13.0	-36.3	
5262.90	-11.6	H	3.0	35.4	1.0	-46.0	-13.0	-33.0	
7017.20	-8.8	H	3.0	35.7	1.0	-43.5	-13.0	-30.5	

This report shall not be reproduced except in full, without the written approval of UL Verification Services Inc.

UL Verification Services, Inc.
Above 1GHz High Frequency Substitution Measurement

Company: LG
Project #: 15I21442
Date: 8/4/2015
Test Engineer: Jude Semana
Configuration: EUT + Charger + Headset
Location: Chamber C
Mode: LTE_QPSK Band 4 Harmonics, 1.4MHz Bandwidth

Band
LTE4
1.4MHz
QPSK

f MHz	SG reading (dBm)	Ant. Pol. (H/V)	Distance (m)	Preamp (dB)	Filter (dB)	EIRP (dBm)	Limit (dBm)	Delta (dB)	Notes
Low Ch, 1710.7									
3421.40	-15.1	V	3.0	36.1	1.0	-50.2	-13.0	-37.2	
5132.10	-12.2	V	3.0	35.4	1.0	-46.6	-13.0	-33.6	
6842.80	-7.0	V	3.0	35.7	1.0	-41.7	-13.0	-28.7	
3421.40	-14.9	H	3.0	36.1	1.0	-49.9	-13.0	-36.9	
5132.10	-11.0	H	3.0	35.4	1.0	-45.4	-13.0	-32.4	
6842.80	-8.8	H	3.0	35.7	1.0	-43.4	-13.0	-30.4	
Mid Ch, 1732.5									
3465.00	-15.2	V	3.0	36.0	1.0	-50.2	-13.0	-37.2	
5197.50	-12.1	V	3.0	35.4	1.0	-46.5	-13.0	-33.5	
6930.00	-6.6	V	3.0	35.7	1.0	-41.3	-13.0	-28.3	
3465.00	-15.4	H	3.0	36.0	1.0	-50.5	-13.0	-37.5	
5197.50	-10.2	H	3.0	35.4	1.0	-44.6	-13.0	-31.6	
6930.00	-9.9	H	3.0	35.7	1.0	-44.5	-13.0	-31.5	
High Ch, 1754.3									
3508.60	-16.0	V	3.0	36.0	1.0	-51.0	-13.0	-38.0	
5262.90	-10.2	V	3.0	35.4	1.0	-44.7	-13.0	-31.7	
7017.20	-8.6	V	3.0	35.7	1.0	-43.3	-13.0	-30.3	
3508.60	-14.0	H	3.0	36.0	1.0	-49.0	-13.0	-36.0	
5262.90	-11.3	H	3.0	35.4	1.0	-45.8	-13.0	-32.8	
7017.20	-8.6	H	3.0	35.7	1.0	-43.2	-13.0	-30.2	

This report shall not be reproduced except in full, without the written approval of UL Verification Services Inc.

LTE Band 5

UL Verification Services
Above 1GHz High Frequency Substitution Measurement

Company: LG
Project #: 15I21442
Date: 8/5/2015
Test Engineer: Jude Semana
Configuration: EUT , AC Adapter, HS
Location: Chamber C
Mode: LTE_16QAM Band 5 Harmonics, 10MHz Bandwidth

Band
LTE5
10MHz
16QAM

f MHz	SG reading (dBm)	Ant. Pol. (H/V)	Distance (m)	Preamp (dB)	Filter (dB)	EIRP (dBm)	Limit (dBm)	Delta (dB)	Notes
Low Ch, 829									
1658.00	-23.4	V	3.0	37.0	1.0	-59.5	-13.0	-46.5	
2487.00	-17.5	V	3.0	36.4	1.0	-52.9	-13.0	-39.9	
3316.00	-17.8	V	3.0	36.1	1.0	-53.0	-13.0	-40.0	
1658.00	-23.2	H	3.0	37.0	1.0	-59.2	-13.0	-46.2	
2487.00	-19.7	H	3.0	36.4	1.0	-55.1	-13.0	-42.1	
3316.00	-18.1	H	3.0	36.1	1.0	-53.2	-13.0	-40.2	
Mid Ch, 836.5									
1673.00	-23.7	V	3.0	37.0	1.0	-59.7	-13.0	-46.7	
2509.50	-17.8	V	3.0	36.4	1.0	-53.2	-13.0	-40.2	
3346.00	-18.1	V	3.0	36.1	1.0	-53.2	-13.0	-40.2	
1673.00	-22.7	H	3.0	37.0	1.0	-58.7	-13.0	-45.7	
2509.50	-19.2	H	3.0	36.4	1.0	-54.6	-13.0	-41.6	
3346.00	-16.9	H	3.0	36.1	1.0	-52.0	-13.0	-39.0	
High Ch, 844									
1688.00	-23.7	V	3.0	37.0	1.0	-59.7	-13.0	-46.7	
2532.00	-17.0	V	3.0	36.4	1.0	-52.4	-13.0	-39.4	
3376.00	-17.6	V	3.0	36.1	1.0	-52.7	-13.0	-39.7	
1688.00	-23.0	H	3.0	37.0	1.0	-58.9	-13.0	-45.9	
2532.00	-19.1	H	3.0	36.4	1.0	-54.5	-13.0	-41.5	
3376.00	-17.9	H	3.0	36.1	1.0	-53.0	-13.0	-40.0	

This report shall not be reproduced except in full, without the written approval of UL Verification Services Inc.

UL Verification Services
Above 1GHz High Frequency Substitution Measurement

Company: LG
Project #: 15I21442
Date: 8/5/2015
Test Engineer: Jude Semana
Configuration: EUT , AC Adapter, HS
Location: Chamber C
Mode: LTE_QPSK Band 5 Harmonics, 10MHz Bandwidth

Band LTE5 10MHz QPSK

f MHz	SG reading (dBm)	Ant. Pol. (H/V)	Distance (m)	Preamp (dB)	Filter (dB)	EIRP (dBm)	Limit (dBm)	Delta (dB)	Notes
Low Ch, 829									
1658.00	-23.1	V	3.0	37.0	1.0	-59.1	-13.0	-46.1	
2487.00	-17.2	V	3.0	36.4	1.0	-52.6	-13.0	-39.6	
3316.00	-17.5	V	3.0	36.1	1.0	-52.7	-13.0	-39.7	
1658.00	-22.9	H	3.0	37.0	1.0	-58.9	-13.0	-45.9	
2487.00	-19.3	H	3.0	36.4	1.0	-54.7	-13.0	-41.7	
3316.00	-17.9	H	3.0	36.1	1.0	-53.0	-13.0	-40.0	
Mid Ch, 836.5									
1673.00	-23.4	V	3.0	37.0	1.0	-59.4	-13.0	-46.4	
2509.50	-17.7	V	3.0	36.4	1.0	-53.1	-13.0	-40.1	
3346.00	-18.0	V	3.0	36.1	1.0	-53.2	-13.0	-40.2	
1673.00	-22.6	H	3.0	37.0	1.0	-58.6	-13.0	-45.6	
2509.50	-19.1	H	3.0	36.4	1.0	-54.5	-13.0	-41.5	
3346.00	-17.7	H	3.0	36.1	1.0	-52.8	-13.0	-39.8	
High Ch, 844									
1688.00	-23.5	V	3.0	37.0	1.0	-59.5	-13.0	-46.5	
2532.00	-17.1	V	3.0	36.4	1.0	-52.5	-13.0	-39.5	
3376.00	-17.5	V	3.0	36.1	1.0	-52.6	-13.0	-39.6	
1688.00	-22.7	H	3.0	37.0	1.0	-58.7	-13.0	-45.7	
2532.00	-18.9	H	3.0	36.4	1.0	-54.3	-13.0	-41.3	
3376.00	-17.8	H	3.0	36.1	1.0	-52.9	-13.0	-39.9	

UL VERIFICATION SERVICES INC. FORM NO: CCSUP4701H
47173 BENICIA STREET, FREMONT, CA 94538, USA TEL: (510) 771-1000 FAX: (510) 661-0888
This report shall not be reproduced except in full, without the written approval of UL Verification Services Inc.

UL Verification Services
Above 1GHz High Frequency Substitution Measurement

Company: LG
Project #: 15I21442
Date: 8/5/2015
Test Engineer: Jude Semana
Configuration: EUT , AC Adapter, HS
Location: Chamber C
Mode: LTE_16QAM Band 5 Harmonics, 5MHz Bandwidth

Band
LTE5
5MHz
16QAM

f MHz	SG reading (dBm)	Ant. Pol. (H/V)	Distance (m)	Preamp (dB)	Filter (dB)	EIRP (dBm)	Limit (dBm)	Delta (dB)	Notes
Low Ch, 826.5									
1653.00	-23.4	V	3.0	37.0	1.0	-59.4	-13.0	-46.4	
2479.50	-17.2	V	3.0	36.4	1.0	-52.6	-13.0	-39.6	
3306.00	-17.8	V	3.0	36.1	1.0	-53.0	-13.0	-40.0	
1653.00	-23.2	H	3.0	37.0	1.0	-59.2	-13.0	-46.2	
2479.50	-19.7	H	3.0	36.4	1.0	-55.2	-13.0	-42.2	
3306.00	-18.0	H	3.0	36.1	1.0	-53.2	-13.0	-40.2	
Mid Ch, 836.5									
1673.00	-23.7	V	3.0	37.0	1.0	-59.7	-13.0	-46.7	
2509.50	-17.8	V	3.0	36.4	1.0	-53.2	-13.0	-40.2	
3346.00	-18.5	V	3.0	36.1	1.0	-53.6	-13.0	-40.6	
1673.00	-23.2	H	3.0	37.0	1.0	-59.2	-13.0	-46.2	
2509.50	-19.1	H	3.0	36.4	1.0	-54.5	-13.0	-41.5	
3346.00	-18.0	H	3.0	36.1	1.0	-53.1	-13.0	-40.1	
High Ch, 846.5									
1693.00	-23.7	V	3.0	37.0	1.0	-59.7	-13.0	-46.7	
2539.50	-17.6	V	3.0	36.4	1.0	-53.0	-13.0	-40.0	
3386.00	-17.7	V	3.0	36.1	1.0	-52.7	-13.0	-39.7	
1693.00	-23.1	H	3.0	37.0	1.0	-59.1	-13.0	-46.1	
2539.50	-18.8	H	3.0	36.4	1.0	-54.2	-13.0	-41.2	
3386.00	-17.7	H	3.0	36.1	1.0	-52.8	-13.0	-39.8	

UL VERIFICATION SERVICES INC. FORM NO: CCSUP4701H
47173 BENICIA STREET, FREMONT, CA 94538, USA TEL: (510) 771-1000 FAX: (510) 661-0888
This report shall not be reproduced except in full, without the written approval of UL Verification Services Inc.

UL Verification Services
Above 1GHz High Frequency Substitution Measurement

Company: LG
Project #: 15I21442
Date: 8/5/2015
Test Engineer: Jude Semana
Configuration: EUT , AC Adapter, HS
Location: Chamber C
Mode: LTE_QPSK Band 5 Harmonics, 5MHz Bandwidth

Band
LTE5
5MHz
QPSK

f MHz	SG reading (dBm)	Ant. Pol. (H/V)	Distance (m)	Preamp (dB)	Filter (dB)	EIRP (dBm)	Limit (dBm)	Delta (dB)	Notes
Low Ch, 826.5									
1653.00	-23.2	V	3.0	37.0	1.0	-59.2	-13.0	-46.2	
2479.50	-17.3	V	3.0	36.4	1.0	-52.7	-13.0	-39.7	
3306.00	-17.5	V	3.0	36.1	1.0	-52.7	-13.0	-39.7	
1653.00	-22.9	H	3.0	37.0	1.0	-58.9	-13.0	-45.9	
2479.50	-19.3	H	3.0	36.4	1.0	-54.7	-13.0	-41.7	
3306.00	-17.9	H	3.0	36.1	1.0	-53.1	-13.0	-40.1	
Mid Ch, 836.5									
1673.00	-23.4	V	3.0	37.0	1.0	-59.4	-13.0	-46.4	
2509.50	-17.6	V	3.0	36.4	1.0	-53.1	-13.0	-40.1	
3346.00	-18.0	V	3.0	36.1	1.0	-53.1	-13.0	-40.1	
1673.00	-22.6	H	3.0	37.0	1.0	-58.6	-13.0	-45.6	
2509.50	-19.1	H	3.0	36.4	1.0	-54.5	-13.0	-41.5	
3346.00	-17.8	H	3.0	36.1	1.0	-52.9	-13.0	-39.9	
High Ch, 846.5									
1693.00	-23.5	V	3.0	37.0	1.0	-59.4	-13.0	-46.4	
2539.50	-17.1	V	3.0	36.4	1.0	-52.5	-13.0	-39.5	
3386.00	-17.5	V	3.0	36.1	1.0	-52.6	-13.0	-39.6	
1693.00	-22.6	H	3.0	37.0	1.0	-58.6	-13.0	-45.6	
2539.50	-18.8	H	3.0	36.4	1.0	-54.2	-13.0	-41.2	
3386.00	-17.6	H	3.0	36.1	1.0	-52.7	-13.0	-39.7	

This report shall not be reproduced except in full, without the written approval of UL Verification Services Inc.

UL Verification Services
Above 1GHz High Frequency Substitution Measurement

Company: LG
Project #: 15I21442
Date: 8/5/2015
Test Engineer: Jude Semana
Configuration: EUT , AC Adapter, HS
Location: Chamber C
Mode: LTE_16QAM Band 5 Harmonics, 3MHz Bandwidth

Band
LTE5
3MHz
16QAM

f MHz	SG reading (dBm)	Ant. Pol. (H/V)	Distance (m)	Preamp (dB)	Filter (dB)	EIRP (dBm)	Limit (dBm)	Delta (dB)	Notes
Low Ch, 825.5									
1651.00	-23.5	V	3.0	37.0	1.0	-59.6	-13.0	-46.6	
2476.50	-17.4	V	3.0	36.4	1.0	-52.9	-13.0	-39.9	
3302.00	-17.7	V	3.0	36.2	1.0	-52.8	-13.0	-39.8	
1651.00	-23.3	H	3.0	37.0	1.0	-59.3	-13.0	-46.3	
2476.50	-19.4	H	3.0	36.4	1.0	-54.8	-13.0	-41.8	
3302.00	-18.0	H	3.0	36.2	1.0	-53.2	-13.0	-40.2	
Mid Ch, 836.5									
1673.00	-23.6	V	3.0	37.0	1.0	-59.6	-13.0	-46.6	
2509.50	-18.0	V	3.0	36.4	1.0	-53.4	-13.0	-40.4	
3346.00	-18.1	V	3.0	36.1	1.0	-53.2	-13.0	-40.2	
1673.00	-23.0	H	3.0	37.0	1.0	-58.9	-13.0	-45.9	
2509.50	-19.4	H	3.0	36.4	1.0	-54.8	-13.0	-41.8	
3346.00	-18.0	H	3.0	36.1	1.0	-53.1	-13.0	-40.1	
High Ch, 847.5									
1695.00	-23.6	V	3.0	37.0	1.0	-59.6	-13.0	-46.6	
2542.50	-17.2	V	3.0	36.4	1.0	-52.6	-13.0	-39.6	
3390.00	-17.7	V	3.0	36.1	1.0	-52.8	-13.0	-39.8	
1695.00	-23.0	H	3.0	37.0	1.0	-59.0	-13.0	-46.0	
2542.50	-19.0	H	3.0	36.4	1.0	-54.4	-13.0	-41.4	
3390.00	-18.0	H	3.0	36.1	1.0	-53.1	-13.0	-40.1	

UL VERIFICATION SERVICES INC. FORM NO: CCSUP4701H
47173 BENICIA STREET, FREMONT, CA 94538, USA TEL: (510) 771-1000 FAX: (510) 661-0888
This report shall not be reproduced except in full, without the written approval of UL Verification Services Inc.

UL Verification Services
Above 1GHz High Frequency Substitution Measurement

Company: LG
Project #: 15I21442
Date: 8/5/2015
Test Engineer: Jude Semana
Configuration: EUT , AC Adapter, HS
Location: Chamber C
Mode: LTE_QPSK Band 5 Harmonics, 3MHz Bandwidth

Band
LTE5
3MHz
QPSK

f MHz	SG reading (dBm)	Ant. Pol. (H/V)	Distance (m)	Preamp (dB)	Filter (dB)	EIRP (dBm)	Limit (dBm)	Delta (dB)	Notes
Low Ch, 825.5									
1651.00	-23.3	V	3.0	37.0	1.0	-59.4	-13.0	-46.4	
2476.50	-17.2	V	3.0	36.4	1.0	-52.6	-13.0	-39.6	
3302.00	-17.4	V	3.0	36.2	1.0	-52.5	-13.0	-39.5	
1651.00	-23.0	H	3.0	37.0	1.0	-59.0	-13.0	-46.0	
2476.50	-19.1	H	3.0	36.4	1.0	-54.6	-13.0	-41.6	
3302.00	-17.9	H	3.0	36.2	1.0	-53.0	-13.0	-40.0	
Mid Ch, 836.5									
1673.00	-23.5	V	3.0	37.0	1.0	-59.5	-13.0	-46.5	
2509.50	-17.7	V	3.0	36.4	1.0	-53.1	-13.0	-40.1	
3346.00	-18.1	V	3.0	36.1	1.0	-53.2	-13.0	-40.2	
1673.00	-22.6	H	3.0	37.0	1.0	-58.6	-13.0	-45.6	
2509.50	-19.0	H	3.0	36.4	1.0	-54.4	-13.0	-41.4	
3346.00	-17.6	H	3.0	36.1	1.0	-52.8	-13.0	-39.8	
High Ch, 847.5									
1695.00	-23.4	V	3.0	37.0	1.0	-59.4	-13.0	-46.4	
2542.50	-17.0	V	3.0	36.4	1.0	-52.4	-13.0	-39.4	
3390.00	-17.5	V	3.0	36.1	1.0	-52.6	-13.0	-39.6	
1695.00	-22.6	H	3.0	37.0	1.0	-58.6	-13.0	-45.6	
2542.50	-18.8	H	3.0	36.4	1.0	-54.2	-13.0	-41.2	
3390.00	-17.6	H	3.0	36.1	1.0	-52.7	-13.0	-39.7	

UL VERIFICATION SERVICES INC. FORM NO: CCSUP4701H
47173 BENICIA STREET, FREMONT, CA 94538, USA TEL: (510) 771-1000 FAX: (510) 661-0888
This report shall not be reproduced except in full, without the written approval of UL Verification Services Inc.

UL Verification Services
Above 1GHz High Frequency Substitution Measurement

Company: LG
Project #: 15I21442
Date: 8/5/2015
Test Engineer: Jude Semana
Configuration: EUT , AC Adapter, HS
Location: Chamber C
Mode: LTE_16QAM Band 5 Harmonics, 1.4MHz Bandwidth

Band
LTE5
1.4MHz
16QAM

f MHz	SG reading (dBm)	Ant. Pol. (H/V)	Distance (m)	Preamp (dB)	Filter (dB)	EIRP (dBm)	Limit (dBm)	Delta (dB)	Notes
Low Ch, 824.7									
1649.40	-23.4	V	3.0	37.0	1.0	-59.4	-13.0	-46.4	
2474.10	-17.5	V	3.0	36.4	1.0	-53.0	-13.0	-40.0	
3298.80	-17.8	V	3.0	36.2	1.0	-53.0	-13.0	-40.0	
1649.40	-23.3	H	3.0	37.0	1.0	-59.3	-13.0	-46.3	
2474.10	-19.6	H	3.0	36.4	1.0	-55.0	-13.0	-42.0	
3298.80	-18.0	H	3.0	36.2	1.0	-53.2	-13.0	-40.2	
Mid Ch, 836.5									
1673.00	-23.7	V	3.0	37.0	1.0	-59.7	-13.0	-46.7	
2509.50	-18.0	V	3.0	36.4	1.0	-53.4	-13.0	-40.4	
3346.00	-18.4	V	3.0	36.1	1.0	-53.5	-13.0	-40.5	
1673.00	-23.1	H	3.0	37.0	1.0	-59.0	-13.0	-46.0	
2509.50	-19.3	H	3.0	36.4	1.0	-54.7	-13.0	-41.7	
3346.00	-17.9	H	3.0	36.1	1.0	-53.0	-13.0	-40.0	
High Ch, 848.3									
1696.60	-23.6	V	3.0	37.0	1.0	-59.6	-13.0	-46.6	
2544.90	-17.5	V	3.0	36.4	1.0	-52.9	-13.0	-39.9	
3393.20	-17.8	V	3.0	36.1	1.0	-52.9	-13.0	-39.9	
1696.60	-22.9	H	3.0	37.0	1.0	-58.9	-13.0	-45.9	
2544.90	-19.1	H	3.0	36.4	1.0	-54.5	-13.0	-41.5	
3393.20	-17.8	H	3.0	36.1	1.0	-52.9	-13.0	-39.9	

UL VERIFICATION SERVICES INC. FORM NO: CCSUP4701H
47173 BENICIA STREET, FREMONT, CA 94538, USA TEL: (510) 771-1000 FAX: (510) 661-0888
This report shall not be reproduced except in full, without the written approval of UL Verification Services Inc.

UL Verification Services
Above 1GHz High Frequency Substitution Measurement

Company: LG
Project #: 15I21442
Date: 8/5/2015
Test Engineer: Jude Semana
Configuration: EUT , AC Adapter, HS
Location: Chamber C
Mode: LTE_QPSK Band 5 Harmonics, 1.4MHz Bandwidth

Band
LTE5
1.4MHz
QPSK

f MHz	SG reading (dBm)	Ant. Pol. (H/V)	Distance (m)	Preamp (dB)	Filter (dB)	EIRP (dBm)	Limit (dBm)	Delta (dB)	Notes
Low Ch, 824.7									
1649.40	-23.3	V	3.0	37.0	1.0	-59.3	-13.0	-46.3	
2474.10	-17.3	V	3.0	36.4	1.0	-52.7	-13.0	-39.7	
3298.80	-17.5	V	3.0	36.2	1.0	-52.7	-13.0	-39.7	
1649.40	-23.0	H	3.0	37.0	1.0	-59.0	-13.0	-46.0	
2474.10	-19.2	H	3.0	36.4	1.0	-54.6	-13.0	-41.6	
3298.80	-17.9	H	3.0	36.2	1.0	-53.1	-13.0	-40.1	
Mid Ch, 836.5									
1673.00	-23.5	V	3.0	37.0	1.0	-59.5	-13.0	-46.5	
2509.50	-17.6	V	3.0	36.4	1.0	-53.0	-13.0	-40.0	
3346.00	-18.0	V	3.0	36.1	1.0	-53.1	-13.0	-40.1	
1673.00	-22.7	H	3.0	37.0	1.0	-58.6	-13.0	-45.6	
2509.50	-19.1	H	3.0	36.4	1.0	-54.5	-13.0	-41.5	
3346.00	-17.7	H	3.0	36.1	1.0	-52.8	-13.0	-39.8	
High Ch, 848.3									
1696.60	-23.3	V	3.0	37.0	1.0	-59.3	-13.0	-46.3	
2544.90	-17.1	V	3.0	36.4	1.0	-52.5	-13.0	-39.5	
3393.20	-17.6	V	3.0	36.1	1.0	-52.7	-13.0	-39.7	
1696.60	-22.6	H	3.0	37.0	1.0	-58.6	-13.0	-45.6	
2544.90	-18.8	H	3.0	36.4	1.0	-54.2	-13.0	-41.2	
3393.20	-17.6	H	3.0	36.1	1.0	-52.7	-13.0	-39.7	

UL VERIFICATION SERVICES INC. FORM NO: CCSUP4701H
47173 BENICIA STREET, FREMONT, CA 94538, USA TEL: (510) 771-1000 FAX: (510) 661-0888
This report shall not be reproduced except in full, without the written approval of UL Verification Services Inc.

LTE Band 12

UL Verification Services, Inc.
Above 1GHz High Frequency Substitution Measurement

Company: LG
Project #: 15I21442
Date: 8/6/2015
Test Engineer: Jude Semana
Configuration: EUT , AC Adapter /HS
Location: Chamber C
Mode: LTE_16QAM Band 12 Harmonics, 10MHz Bandwidth

Band: LTE12 10MHz 16QAM

f MHz	SG reading (dBm)	Ant. Pol. (H/V)	Distance (m)	Preamp (dB)	Filter (dB)	EIRP (dBm)	Limit (dBm)	Delta (dB)	Notes
Low Ch,704									
1408.00	-27.5	V	3.0	37.4	1.0	-63.9	-13.0	-50.9	
2112.00	-21.2	V	3.0	36.6	1.0	-56.8	-13.0	-43.8	
2816.00	-19.5	V	3.0	36.4	1.0	-54.8	-13.0	-41.8	
1408.00	-25.8	H	3.0	37.4	1.0	-62.2	-13.0	-49.2	
2112.00	-22.0	H	3.0	36.6	1.0	-57.6	-13.0	-44.6	
2816.00	-20.0	H	3.0	36.4	1.0	-55.4	-13.0	-42.4	
Mid Ch,707.5									
1415.00	-27.5	V	3.0	37.3	1.0	-63.8	-13.0	-50.8	
2122.50	-20.8	V	3.0	36.6	1.0	-56.3	-13.0	-43.3	
2830.00	-19.6	V	3.0	36.4	1.0	-55.0	-13.0	-42.0	
1415.00	-25.6	H	3.0	37.3	1.0	-61.9	-13.0	-48.9	
2122.50	-21.6	H	3.0	36.6	1.0	-57.1	-13.0	-44.1	
2830.00	-19.9	H	3.0	36.4	1.0	-55.3	-13.0	-42.3	
High Ch,711									
1422.00	-27.2	V	3.0	37.3	1.0	-63.5	-13.0	-50.5	
2133.00	-20.7	V	3.0	36.6	1.0	-56.2	-13.0	-43.2	
2844.00	-19.3	V	3.0	36.4	1.0	-54.7	-13.0	-41.7	
1422.00	-25.8	H	3.0	37.3	1.0	-62.2	-13.0	-49.2	
2133.00	-21.9	H	3.0	36.6	1.0	-57.4	-13.0	-44.4	
2844.00	-20.4	H	3.0	36.4	1.0	-55.8	-13.0	-42.8	

UL VERIFICATION SERVICES INC. FORM NO: CCSUP4701H
47173 BENICIA STREET, FREMONT, CA 94538, USA TEL: (510) 771-1000 FAX: (510) 661-0888
This report shall not be reproduced except in full, without the written approval of UL Verification Services Inc.

UL Verification Services, Inc.
Above 1GHz High Frequency Substitution Measurement

Company: LG
Project #: 15I21442
Date: 8/6/2015
Test Engineer: Jude Semana
Configuration: EUT , AC Adapter /HS
Location: Chamber C
Mode: LTE_QPSK Band 12 Harmonics, 10MHz Bandwidth

Band
LTE12
10MHz
QPSK

f MHz	SG reading (dBm)	Ant. Pol. (H/V)	Distance (m)	Preamp (dB)	Filter (dB)	EIRP (dBm)	Limit (dBm)	Delta (dB)	Notes
Low Ch,704									
1408.00	-27.2	V	3.0	37.4	1.0	-63.6	-13.0	-50.6	
2112.00	-20.6	V	3.0	36.6	1.0	-56.2	-13.0	-43.2	
2816.00	-19.3	V	3.0	36.4	1.0	-54.6	-13.0	-41.6	
1408.00	-25.4	H	3.0	37.4	1.0	-61.7	-13.0	-48.7	
2112.00	-21.6	H	3.0	36.6	1.0	-57.2	-13.0	-44.2	
2816.00	-19.9	H	3.0	36.4	1.0	-55.3	-13.0	-42.3	
Mid Ch,707.5									
1415.00	-27.1	V	3.0	37.3	1.0	-63.5	-13.0	-50.5	
2122.50	-20.4	V	3.0	36.6	1.0	-56.0	-13.0	-43.0	
2830.00	-19.1	V	3.0	36.4	1.0	-54.5	-13.0	-41.5	
1415.00	-25.0	H	3.0	37.3	1.0	-61.4	-13.0	-48.4	
2122.50	-21.3	H	3.0	36.6	1.0	-56.9	-13.0	-43.9	
2830.00	-19.7	H	3.0	36.4	1.0	-55.1	-13.0	-42.1	
High Ch,711									
1422.00	-26.8	V	3.0	37.3	1.0	-63.1	-13.0	-50.1	
2133.00	-20.3	V	3.0	36.6	1.0	-55.9	-13.0	-42.9	
2844.00	-19.0	V	3.0	36.4	1.0	-54.4	-13.0	-41.4	
1422.00	-25.4	H	3.0	37.3	1.0	-61.8	-13.0	-48.8	
2133.00	-21.6	H	3.0	36.6	1.0	-57.2	-13.0	-44.2	
2844.00	-20.1	H	3.0	36.4	1.0	-55.5	-13.0	-42.5	

UL VERIFICATION SERVICES INC. FORM NO: CCSUP4701H
47173 BENICIA STREET, FREMONT, CA 94538, USA TEL: (510) 771-1000 FAX: (510) 661-0888
This report shall not be reproduced except in full, without the written approval of UL Verification Services Inc.

UL Verification Services, Inc.
Above 1GHz High Frequency Substitution Measurement

Company: LG
Project #: 15I21442
Date: 8/6/2015
Test Engineer: Jude Semana
Configuration: EUT , AC Adapter /HS
Location: Chamber C
Mode: LTE_16QAM Band 12 Harmonics, 5MHz Bandwidth

Band
LTE12
5MHz
16QAM

f MHz	SG reading (dBm)	Ant. Pol. (H/V)	Distance (m)	Preamp (dB)	Filter (dB)	EIRP (dBm)	Limit (dBm)	Delta (dB)	Notes
Low Ch, 701.50									
1403.00	-27.1	V	3.0	37.4	1.0	-63.5	-13.0	-50.5	
2104.50	-20.9	V	3.0	36.6	1.0	-56.5	-13.0	-43.5	
2806.00	-19.6	V	3.0	36.4	1.0	-55.0	-13.0	-42.0	
1403.00	-25.2	H	3.0	37.4	1.0	-61.6	-13.0	-48.6	
2104.50	-22.5	H	3.0	36.6	1.0	-58.0	-13.0	-45.0	
2806.00	-20.2	H	3.0	36.4	1.0	-55.6	-13.0	-42.6	
Mid Ch, 707.50									
1415.00	-26.9	V	3.0	37.3	1.0	-63.3	-13.0	-50.3	
2122.50	-20.8	V	3.0	36.6	1.0	-56.3	-13.0	-43.3	
2830.00	-19.8	V	3.0	36.4	1.0	-55.1	-13.0	-42.1	
1415.00	-26.3	H	3.0	37.3	1.0	-62.7	-13.0	-49.7	
2122.50	-22.4	H	3.0	36.6	1.0	-58.0	-13.0	-45.0	
2830.00	-20.9	H	3.0	36.4	1.0	-56.3	-13.0	-43.3	
High Ch, 713.50									
1427.00	-26.8	V	3.0	37.3	1.0	-63.2	-13.0	-50.2	
2140.50	-20.0	V	3.0	36.6	1.0	-55.6	-13.0	-42.6	
2854.00	-20.0	V	3.0	36.4	1.0	-55.4	-13.0	-42.4	
1427.00	-24.9	H	3.0	37.3	1.0	-61.2	-13.0	-48.2	
2140.50	-20.9	H	3.0	36.6	1.0	-56.5	-13.0	-43.5	
2854.00	-20.1	H	3.0	36.4	1.0	-55.4	-13.0	-42.4	

This report shall not be reproduced except in full, without the written approval of UL Verification Services Inc.

UL Verification Services, Inc.
Above 1GHz High Frequency Substitution Measurement

Company: LG
Project #: 15I21442
Date: 8/6/2015
Test Engineer: Jude Semana
Configuration: EUT , AC Adapter /HS
Location: Chamber C
Mode: LTE_QPSK Band 12 Harmonics, 5MHz Bandwidth

Band
LTE12
5MHz
QPSK

f MHz	SG reading (dBm)	Ant. Pol. (H/V)	Distance (m)	Preamp (dB)	Filter (dB)	EIRP (dBm)	Limit (dBm)	Delta (dB)	Notes
Low Ch, 701.50									
1403.00	-27.1	V	3.0	37.4	1.0	-63.5	-13.0	-50.5	
2104.50	-20.5	V	3.0	36.6	1.0	-56.1	-13.0	-43.1	
2806.00	-19.3	V	3.0	36.4	1.0	-54.6	-13.0	-41.6	
1403.00	-25.1	H	3.0	37.4	1.0	-61.5	-13.0	-48.5	
2104.50	-22.4	H	3.0	36.6	1.0	-58.0	-13.0	-45.0	
2806.00	-20.3	H	3.0	36.4	1.0	-55.6	-13.0	-42.6	
Mid Ch, 707.50									
1415.00	-27.0	V	3.0	37.3	1.0	-63.3	-13.0	-50.3	
2122.50	-20.3	V	3.0	36.6	1.0	-55.9	-13.0	-42.9	
2830.00	-19.5	V	3.0	36.4	1.0	-54.9	-13.0	-41.9	
1415.00	-25.8	H	3.0	37.3	1.0	-62.1	-13.0	-49.1	
2122.50	-21.7	H	3.0	36.6	1.0	-57.3	-13.0	-44.3	
2830.00	-20.4	H	3.0	36.4	1.0	-55.8	-13.0	-42.8	
High Ch, 713.50									
1427.00	-26.8	V	3.0	37.3	1.0	-63.2	-13.0	-50.2	
2140.50	-19.9	V	3.0	36.6	1.0	-55.5	-13.0	-42.5	
2854.00	-19.2	V	3.0	36.4	1.0	-54.6	-13.0	-41.6	
1427.00	-25.0	H	3.0	37.3	1.0	-61.3	-13.0	-48.3	
2140.50	-20.8	H	3.0	36.6	1.0	-56.3	-13.0	-43.3	
2854.00	-19.4	H	3.0	36.4	1.0	-54.7	-13.0	-41.7	

UL VERIFICATION SERVICES INC. FORM NO: CCSUP4701H
47173 BENICIA STREET, FREMONT, CA 94538, USA TEL: (510) 771-1000 FAX: (510) 661-0888
This report shall not be reproduced except in full, without the written approval of UL Verification Services Inc.

UL Verification Services, Inc.
Above 1GHz High Frequency Substitution Measurement

Company: LG
Project #: 15I21442
Date: 8/6/2015
Test Engineer: Jude Semana
Configuration: EUT , AC Adapter /HS
Location: Chamber C
Mode: LTE_16QAM Band 12 Harmonics, 3MHz Bandwidth

Band
LTE12
3MHz
16QAM

f MHz	SG reading (dBm)	Ant. Pol. (H/V)	Distance (m)	Preamp (dB)	Filter (dB)	EIRP (dBm)	Limit (dBm)	Delta (dB)	Notes
Low Ch, 700.5									
1401.00	-27.2	V	3.0	37.4	1.0	-63.6	-13.0	-50.6	
2101.50	-20.6	V	3.0	36.6	1.0	-56.2	-13.0	-43.2	
2802.00	-19.0	V	3.0	36.4	1.0	-54.4	-13.0	-41.4	
1401.00	-25.3	H	3.0	37.4	1.0	-61.7	-13.0	-48.7	
2101.50	-21.8	H	3.0	36.6	1.0	-57.4	-13.0	-44.4	
2802.00	-20.1	H	3.0	36.4	1.0	-55.5	-13.0	-42.5	
Mid Ch, 707.50									
1415.00	-27.2	V	3.0	37.3	1.0	-63.5	-13.0	-50.5	
2122.00	-20.4	V	3.0	36.6	1.0	-56.0	-13.0	-43.0	
2830.00	-19.9	V	3.0	36.4	1.0	-55.3	-13.0	-42.3	
1415.00	-25.0	H	3.0	37.3	1.0	-61.4	-13.0	-48.4	
2122.00	-21.6	H	3.0	36.6	1.0	-57.2	-13.0	-44.2	
2830.00	-20.1	H	3.0	36.4	1.0	-55.4	-13.0	-42.4	
High Ch, 714.5									
1429.00	-26.9	V	3.0	37.3	1.0	-63.3	-13.0	-50.3	
2143.50	-21.1	V	3.0	36.6	1.0	-56.7	-13.0	-43.7	
2858.00	-20.1	V	3.0	36.4	1.0	-55.4	-13.0	-42.4	
1429.00	-25.7	H	3.0	37.3	1.0	-62.0	-13.0	-49.0	
2143.50	-22.2	H	3.0	36.6	1.0	-57.8	-13.0	-44.8	
2858.00	-20.7	H	3.0	36.4	1.0	-56.1	-13.0	-43.1	

UL VERIFICATION SERVICES INC. FORM NO: CCSUP4701H
47173 BENICIA STREET, FREMONT, CA 94538, USA TEL: (510) 771-1000 FAX: (510) 661-0888
This report shall not be reproduced except in full, without the written approval of UL Verification Services Inc.

UL Verification Services, Inc.
Above 1GHz High Frequency Substitution Measurement

Company: LG
Project #: 15I21442
Date: 8/6/2015
Test Engineer: Jude Semana
Configuration: EUT , AC Adapter /HS
Location: Chamber C
Mode: LTE_QPSK Band 12 Harmonics, 3MHz Bandwidth

Band
LTE12
3MHz
QPSK

f MHz	SG reading (dBm)	Ant. Pol. (H/V)	Distance (m)	Preamp (dB)	Filter (dB)	EIRP (dBm)	Limit (dBm)	Delta (dB)	Notes
Low Ch, 700.5									
1401.00	-27.3	V	3.0	37.4	1.0	-63.7	-13.0	-50.7	
2101.50	-20.6	V	3.0	36.6	1.0	-56.2	-13.0	-43.2	
2802.00	-19.3	V	3.0	36.4	1.0	-54.6	-13.0	-41.6	
1401.00	-25.3	H	3.0	37.4	1.0	-61.7	-13.0	-48.7	
2101.50	-21.7	H	3.0	36.6	1.0	-57.2	-13.0	-44.2	
2802.00	-19.8	H	3.0	36.4	1.0	-55.2	-13.0	-42.2	
Mid Ch, 707.50									
1415.00	-27.2	V	3.0	37.3	1.0	-63.5	-13.0	-50.5	
2122.00	-20.3	V	3.0	36.6	1.0	-55.9	-13.0	-42.9	
2830.00	-19.3	V	3.0	36.4	1.0	-54.7	-13.0	-41.7	
1415.00	-25.0	H	3.0	37.3	1.0	-61.3	-13.0	-48.3	
2122.00	-21.4	H	3.0	36.6	1.0	-57.0	-13.0	-44.0	
2830.00	-19.5	H	3.0	36.4	1.0	-54.9	-13.0	-41.9	
High Ch, 714.5									
1429.00	-26.9	V	3.0	37.3	1.0	-63.2	-13.0	-50.2	
2143.50	-20.5	V	3.0	36.6	1.0	-56.1	-13.0	-43.1	
2858.00	-19.3	V	3.0	36.4	1.0	-54.6	-13.0	-41.6	
1429.00	-25.3	H	3.0	37.3	1.0	-61.6	-13.0	-48.6	
2143.50	-21.6	H	3.0	36.6	1.0	-57.1	-13.0	-44.1	
2858.00	-20.0	H	3.0	36.4	1.0	-55.4	-13.0	-42.4	

This report shall not be reproduced except in full, without the written approval of UL Verification Services Inc.

UL Verification Services
Above 1GHz High Frequency Substitution Measurement

Company: LG
Project #: 15I21442
Date: 8/6/2015
Test Engineer: Jude Semana
Configuration: EUT , AC Adapter /HS
Location: Chamber C
Mode: LTE_16QAM Band 5 Harmonics, 1.4MHz Bandwidth

Band
LTE12
1.4MHz
16QAM

f MHz	SG reading (dBm)	Ant. Pol. (H/V)	Distance (m)	Preamp (dB)	Filter (dB)	EIRP (dBm)	Limit (dBm)	Delta (dB)	Notes
Low Ch, 824.7									
1649.40	-24.5	V	3.0	37.0	1.0	-60.5	-13.0	-47.5	
2474.10	-20.3	V	3.0	36.4	1.0	-55.7	-13.0	-42.7	
3298.80	-17.9	V	3.0	36.2	1.0	-53.0	-13.0	-40.0	
1649.40	-23.0	H	3.0	37.0	1.0	-59.1	-13.0	-46.1	
2474.10	-22.1	H	3.0	36.4	1.0	-57.6	-13.0	-44.6	
3298.80	-17.5	H	3.0	36.2	1.0	-52.7	-13.0	-39.7	
Mid Ch, 836.5									
1673.00	-24.0	V	3.0	37.0	1.0	-60.0	-13.0	-47.0	
2509.50	-19.7	V	3.0	36.4	1.0	-55.1	-13.0	-42.1	
3346.00	-17.9	V	3.0	36.1	1.0	-53.0	-13.0	-40.0	
1673.00	-22.7	H	3.0	37.0	1.0	-58.7	-13.0	-45.7	
2509.50	-21.5	H	3.0	36.4	1.0	-56.9	-13.0	-43.9	
3346.00	-17.4	H	3.0	36.1	1.0	-52.5	-13.0	-39.5	
High Ch, 848.3									
1696.60	-23.6	V	3.0	37.0	1.0	-59.5	-13.0	-46.5	
2544.90	-19.5	V	3.0	36.4	1.0	-54.9	-13.0	-41.9	
3393.20	-17.8	V	3.0	36.1	1.0	-52.9	-13.0	-39.9	
1696.60	-22.6	H	3.0	37.0	1.0	-58.6	-13.0	-45.6	
2544.90	-21.4	H	3.0	36.4	1.0	-56.8	-13.0	-43.8	
3393.20	-17.5	H	3.0	36.1	1.0	-52.6	-13.0	-39.6	

UL VERIFICATION SERVICES INC. FORM NO: CCSUP4701H
47173 BENICIA STREET, FREMONT, CA 94538, USA TEL: (510) 771-1000 FAX: (510) 661-0888
This report shall not be reproduced except in full, without the written approval of UL Verification Services Inc.

UL Verification Services, Inc.
Above 1GHz High Frequency Substitution Measurement

Company: LG
Project #: 15I21442
Date: 8/6/2015
Test Engineer: Jude Semana
Configuration: EUT , AC Adapter /HS
Location: Chamber C
Mode: LTE_QPSK Band 12 Harmonics, 1.4MHz Bandwidth

Band
LTE12
1.4MHz
QPSK

f MHz	SG reading (dBm)	Ant. Pol. (H/V)	Distance (m)	Preamp (dB)	Filter (dB)	EIRP (dBm)	Limit (dBm)	Delta (dB)	Notes
Low Ch, 699.7									
1399.40	-26.5	V	3.0	37.4	1.0	-62.8	-13.0	-49.8	
2099.10	-20.1	V	3.0	36.6	1.0	-55.7	-13.0	-42.7	
2798.80	-18.8	V	3.0	36.4	1.0	-54.1	-13.0	-41.1	
1399.40	-24.9	H	3.0	37.4	1.0	-61.2	-13.0	-48.2	
2099.10	-20.7	H	3.0	36.6	1.0	-56.3	-13.0	-43.3	
2798.80	-19.6	H	3.0	36.4	1.0	-55.0	-13.0	-42.0	
Mid Ch, 707.50									
1415.00	-26.6	V	3.0	37.3	1.0	-62.9	-13.0	-49.9	
2122.00	-20.4	V	3.0	36.6	1.0	-55.9	-13.0	-42.9	
2830.00	-18.7	V	3.0	36.4	1.0	-54.1	-13.0	-41.1	
1415.00	-24.9	H	3.0	37.3	1.0	-61.2	-13.0	-48.2	
2122.00	-21.2	H	3.0	36.6	1.0	-56.8	-13.0	-43.8	
2830.00	-19.5	H	3.0	36.4	1.0	-54.9	-13.0	-41.9	
High Ch, 715.3									
1430.60	-27.5	V	3.0	37.3	1.0	-63.8	-13.0	-50.8	
2145.90	-20.6	V	3.0	36.6	1.0	-56.1	-13.0	-43.1	
2861.20	-18.7	V	3.0	36.4	1.0	-54.1	-13.0	-41.1	
1430.60	-24.8	H	3.0	37.3	1.0	-61.2	-13.0	-48.2	
2145.90	-21.4	H	3.0	36.6	1.0	-57.0	-13.0	-44.0	
2861.20	-19.5	H	3.0	36.4	1.0	-54.9	-13.0	-41.9	

This report shall not be reproduced except in full, without the written approval of UL Verification Services Inc.

LTE Band 17

UL Verification Services, Inc.
Above 1GHz High Frequency Substitution Measurement

Company: LG
Project #: 15I21442
Date: 8/6/2015
Test Engineer: Jude Semana
Configuration: EUT , AC Adapter /HS
Location: Chamber C
Mode: LTE_16QAM Band 17 Harmonics, 10MHz Bandwidth

Band: LTE17 10MHz 16QAM

f MHz	SG reading (dBm)	Ant. Pol. (H/V)	Distance (m)	Preamp (dB)	Filter (dB)	EIRP (dBm)	Limit (dBm)	Delta (dB)	Notes
Low Ch, 709									
1418.00	-27.5	V	3.0	37.4	1.0	-63.9	-13.0	-50.9	
2127.00	-21.2	V	3.0	36.6	1.0	-56.8	-13.0	-43.8	
2836.00	-19.5	V	3.0	36.4	1.0	-54.8	-13.0	-41.8	
1418.00	-25.8	H	3.0	37.4	1.0	-62.2	-13.0	-49.2	
2127.00	-22.0	H	3.0	36.6	1.0	-57.6	-13.0	-44.6	
2836.00	-20.0	H	3.0	36.4	1.0	-55.4	-13.0	-42.4	
Mid Ch, 710									
1420.00	-27.5	V	3.0	37.3	1.0	-63.8	-13.0	-50.8	
2130.00	-20.8	V	3.0	36.6	1.0	-56.3	-13.0	-43.3	
2840.00	-19.6	V	3.0	36.4	1.0	-55.0	-13.0	-42.0	
1420.00	-25.6	H	3.0	37.3	1.0	-61.9	-13.0	-48.9	
2130.00	-21.6	H	3.0	36.6	1.0	-57.1	-13.0	-44.1	
2840.00	-19.9	H	3.0	36.4	1.0	-55.3	-13.0	-42.3	
High Ch, 711									
1422.00	-27.2	V	3.0	37.3	1.0	-63.5	-13.0	-50.5	
2133.00	-20.7	V	3.0	36.6	1.0	-56.2	-13.0	-43.2	
2844.00	-19.3	V	3.0	36.4	1.0	-54.7	-13.0	-41.7	
1422.00	-25.8	H	3.0	37.3	1.0	-62.2	-13.0	-49.2	
2133.00	-21.9	H	3.0	36.6	1.0	-57.4	-13.0	-44.4	
2844.00	-20.4	H	3.0	36.4	1.0	-55.8	-13.0	-42.8	

UL VERIFICATION SERVICES INC. FORM NO: CCSUP4701H
47173 BENICIA STREET, FREMONT, CA 94538, USA TEL: (510) 771-1000 FAX: (510) 661-0888
This report shall not be reproduced except in full, without the written approval of UL Verification Services Inc.

UL Verification Services, Inc.
Above 1GHz High Frequency Substitution Measurement

Company: LG
Project #: 15I21442
Date: 8/6/2015
Test Engineer: Jude Semana
Configuration: EUT , AC Adapter /HS
Location: Chamber C
Mode: LTE_QPSK Band 17 Harmonics, 10MHz Bandwidth

Band
LTE17
10MHz
QPSK

f MHz	SG reading (dBm)	Ant. Pol. (H/V)	Distance (m)	Preamp (dB)	Filter (dB)	EIRP (dBm)	Limit (dBm)	Delta (dB)	Notes
Low Ch, 709									
1418.00	-27.2	V	3.0	37.4	1.0	-63.6	-13.0	-50.6	
2127.00	-20.6	V	3.0	36.6	1.0	-56.2	-13.0	-43.2	
2836.00	-19.3	V	3.0	36.4	1.0	-54.6	-13.0	-41.6	
1418.00	-25.4	H	3.0	37.4	1.0	-61.7	-13.0	-48.7	
2127.00	-21.6	H	3.0	36.6	1.0	-57.2	-13.0	-44.2	
2836.00	-19.9	H	3.0	36.4	1.0	-55.3	-13.0	-42.3	
Mid Ch, 710									
1420.00	-27.1	V	3.0	37.3	1.0	-63.5	-13.0	-50.5	
2130.00	-20.4	V	3.0	36.6	1.0	-56.0	-13.0	-43.0	
2840.00	-19.1	V	3.0	36.4	1.0	-54.5	-13.0	-41.5	
1420.00	-25.0	H	3.0	37.3	1.0	-61.4	-13.0	-48.4	
2130.00	-21.3	H	3.0	36.6	1.0	-56.9	-13.0	-43.9	
2840.00	-19.7	H	3.0	36.4	1.0	-55.1	-13.0	-42.1	
High Ch, 711									
1422.00	-26.8	V	3.0	37.3	1.0	-63.1	-13.0	-50.1	
2133.00	-20.3	V	3.0	36.6	1.0	-55.9	-13.0	-42.9	
2844.00	-19.0	V	3.0	36.4	1.0	-54.4	-13.0	-41.4	
1422.00	-25.4	H	3.0	37.3	1.0	-61.8	-13.0	-48.8	
2133.00	-21.6	H	3.0	36.6	1.0	-57.2	-13.0	-44.2	
2844.00	-20.1	H	3.0	36.4	1.0	-55.5	-13.0	-42.5	

UL VERIFICATION SERVICES INC. FORM NO: CCSUP4701H
47173 BENICIA STREET, FREMONT, CA 94538, USA TEL: (510) 771-1000 FAX: (510) 661-0888
This report shall not be reproduced except in full, without the written approval of UL Verification Services Inc.

UL Verification Services, Inc.
Above 1GHz High Frequency Substitution Measurement

Company: LG
Project #: 15I21442
Date: 8/6/2015
Test Engineer: Jude Semana
Configuration: EUT , AC Adapter /HS
Location: Chamber C
Mode: LTE_16QAM Band 17 Harmonics, 5MHz Bandwidth

Band
LTE17
5MHz
16QAM

f MHz	SG reading (dBm)	Ant. Pol. (H/V)	Distance (m)	Preamp (dB)	Filter (dB)	EIRP (dBm)	Limit (dBm)	Delta (dB)	Notes
Low Ch, 706.5									
1413.00	-27.1	V	3.0	37.4	1.0	-63.5	-13.0	-50.5	
2119.50	-20.9	V	3.0	36.6	1.0	-56.5	-13.0	-43.5	
2826.00	-19.6	V	3.0	36.4	1.0	-55.0	-13.0	-42.0	
1413.00	-25.2	H	3.0	37.4	1.0	-61.6	-13.0	-48.6	
2119.50	-22.5	H	3.0	36.6	1.0	-58.0	-13.0	-45.0	
2826.00	-20.2	H	3.0	36.4	1.0	-55.6	-13.0	-42.6	
Mid Ch, 710									
1420.00	-26.9	V	3.0	37.3	1.0	-63.3	-13.0	-50.3	
2130.00	-20.8	V	3.0	36.6	1.0	-56.3	-13.0	-43.3	
2840.00	-19.8	V	3.0	36.4	1.0	-55.1	-13.0	-42.1	
1420.00	-26.3	H	3.0	37.3	1.0	-62.7	-13.0	-49.7	
2130.00	-22.4	H	3.0	36.6	1.0	-58.0	-13.0	-45.0	
2840.00	-20.9	H	3.0	36.4	1.0	-56.3	-13.0	-43.3	
High Ch, 713.5									
1427.00	-26.8	V	3.0	37.3	1.0	-63.2	-13.0	-50.2	
2140.50	-20.0	V	3.0	36.6	1.0	-55.6	-13.0	-42.6	
2854.00	-20.0	V	3.0	36.4	1.0	-55.4	-13.0	-42.4	
1427.00	-24.9	H	3.0	37.3	1.0	-61.2	-13.0	-48.2	
2140.50	-20.9	H	3.0	36.6	1.0	-56.5	-13.0	-43.5	
2854.00	-20.1	H	3.0	36.4	1.0	-55.4	-13.0	-42.4	

This report shall not be reproduced except in full, without the written approval of UL Verification Services Inc.

UL Verification Services, Inc.
Above 1GHz High Frequency Substitution Measurement

Company: LG
Project #: 15I21442
Date: 8/6/2015
Test Engineer: Jude Semana
Configuration: EUT , AC Adapter /HS
Location: Chamber C
Mode: LTE_QPSK Band 17 Harmonics, 5MHz Bandwidth

Band
LTE17
5MHz
QPSK

f MHz	SG reading (dBm)	Ant. Pol. (H/V)	Distance (m)	Preamp (dB)	Filter (dB)	EIRP (dBm)	Limit (dBm)	Delta (dB)	Notes
Low Ch, 706.5									
1413.00	-27.1	V	3.0	37.4	1.0	-63.5	-13.0	-50.5	
2119.50	-20.5	V	3.0	36.6	1.0	-56.1	-13.0	-43.1	
2826.00	-19.3	V	3.0	36.4	1.0	-54.6	-13.0	-41.6	
1413.00	-25.1	H	3.0	37.4	1.0	-61.5	-13.0	-48.5	
2119.50	-22.4	H	3.0	36.6	1.0	-58.0	-13.0	-45.0	
2826.00	-20.3	H	3.0	36.4	1.0	-55.6	-13.0	-42.6	
Mid Ch, 710									
1420.00	-27.0	V	3.0	37.3	1.0	-63.3	-13.0	-50.3	
2130.00	-20.3	V	3.0	36.6	1.0	-55.9	-13.0	-42.9	
2840.00	-19.5	V	3.0	36.4	1.0	-54.9	-13.0	-41.9	
1420.00	-25.8	H	3.0	37.3	1.0	-62.1	-13.0	-49.1	
2130.00	-21.7	H	3.0	36.6	1.0	-57.3	-13.0	-44.3	
2840.00	-20.4	H	3.0	36.4	1.0	-55.8	-13.0	-42.8	
High Ch, 713.5									
1427.00	-26.8	V	3.0	37.3	1.0	-63.2	-13.0	-50.2	
2140.50	-19.9	V	3.0	36.6	1.0	-55.5	-13.0	-42.5	
2854.00	-19.2	V	3.0	36.4	1.0	-54.6	-13.0	-41.6	
1427.00	-25.0	H	3.0	37.3	1.0	-61.3	-13.0	-48.3	
2140.50	-20.8	H	3.0	36.6	1.0	-56.3	-13.0	-43.3	
2854.00	-19.4	H	3.0	36.4	1.0	-54.7	-13.0	-41.7	

UL VERIFICATION SERVICES INC. FORM NO: CCSUP4701H
47173 BENICIA STREET, FREMONT, CA 94538, USA TEL: (510) 771-1000 FAX: (510) 661-0888
This report shall not be reproduced except in full, without the written approval of UL Verification Services Inc.

LTE Band 30

UL Verification Services
Above 1GHz High Frequency Substitution Measurement

Company: LG
Project #: 15I21442
Date: 8/3/2015
Test Engineer: D. Mun
Configuration: EUT + Headset + AC Adapter (X position)
Location: Chamber A
Mode: LTE_16QAM Band 30 Harmonics, 10MHz Bandwidth

Band
LTE30
10MHz
16QAM

f MHz	SG reading (dBm)	Ant. Pol. (H/V)	Distance (m)	Preamp (dB)	Filter (dB)	EIRP (dBm)	Limit (dBm)	Delta (dB)	Notes
Mid Ch, 2310.00									
4620.00	-17.7	V	3.0	35.4	1.0	-52.1	-40.0	-12.1	
6930.00	-15.7	V	3.0	35.8	1.0	-50.4	-40.0	-10.4	
9240.00	-13.2	V	3.0	35.8	1.0	-48.0	-40.0	-8.0	
4620.00	-17.2	H	3.0	35.4	1.0	-51.6	-40.0	-11.6	
6930.00	-14.9	H	3.0	35.8	1.0	-49.7	-40.0	-9.7	
9240.00	-10.3	H	3.0	35.8	1.0	-45.1	-40.0	-5.1	

UL VERIFICATION SERVICES INC. FORM NO: CCSUP4701H
47173 BENICIA STREET, FREMONT, CA 94538, USA TEL: (510) 771-1000 FAX: (510) 661-0888
This report shall not be reproduced except in full, without the written approval of UL Verification Services Inc.

UL Verification Services
Above 1GHz High Frequency Substitution Measurement

Company: LG
Project #: 15I21442
Date: 8/3/2015
Test Engineer: D. Mun
Configuration: EUT + Headset + AC Adapter (X position)
Location: Chamber A
Mode: LTE_QPSK Band 30 Harmonics, 10MHz Bandwidth

Band

LTE30

10MHz

QPSK

f MHz	SG reading (dBm)	Ant. Pol. (H/V)	Distance (m)	Preamp (dB)	Filter (dB)	EIRP (dBm)	Limit (dBm)	Delta (dB)	Notes
Mid Ch, 2310.00									
4620.00	-18.1	V	3.0	35.4	1.0	-52.5	-40.0	-12.5	
6930.00	-15.3	V	3.0	35.8	1.0	-50.1	-40.0	-10.1	
9240.00	-10.8	V	3.0	35.8	1.0	-45.7	-40.0	-5.7	
4620.00	-16.5	H	3.0	35.4	1.0	-50.9	-40.0	-10.9	
6930.00	-13.9	H	3.0	35.8	1.0	-48.7	-40.0	-8.7	
9240.00	-11.0	H	3.0	35.8	1.0	-45.9	-40.0	-5.9	

UL VERIFICATION SERVICES INC. FORM NO: CCSUP4701H
47173 BENICIA STREET, FREMONT, CA 94538, USA TEL: (510) 771-1000 FAX: (510) 661-0888

This report shall not be reproduced except in full, without the written approval of UL Verification Services Inc.

UL Verification Services
Above 1GHz High Frequency Substitution Measurement

Company: LG
Project #: 15I21442
Date: 8/3/2015
Test Engineer: D. Mun
Configuration: EUT + Headset + AC Adapter (X position)
Location: Chamber A
Mode: LTE_16QAM Band 30 Harmonics, 10MHz Bandwidth

Band
LTE30
5MHz
16QAM

f MHz	SG reading (dBm)	Ant. Pol. (H/V)	Distance (m)	Preamp (dB)	Filter (dB)	EIRP (dBm)	Limit (dBm)	Delta (dB)	Notes
Low Ch, 2307.50									
4615.00	-17.2	V	3.0	35.5	1.0	-51.7	-40.0	-11.7	
6922.50	-14.9	V	3.0	35.7	1.0	-49.7	-40.0	-9.7	
9230.00	-11.7	V	3.0	36.0	1.0	-46.7	-40.0	-6.7	
4615.00	-17.4	H	3.0	35.5	1.0	-51.9	-40.0	-11.9	
6922.50	-13.8	H	3.0	35.7	1.0	-48.6	-40.0	-8.6	
9230.00	-11.4	H	3.0	36.0	1.0	-46.4	-40.0	-6.4	
Mid Ch, 2310.00									
4620.00	-16.6	V	3.0	35.4	1.0	-51.0	-40.0	-11.0	
6930.00	-14.7	V	3.0	35.8	1.0	-49.5	-40.0	-9.5	
9240.00	-12.1	V	3.0	35.8	1.0	-47.0	-40.0	-7.0	
4620.00	-16.6	H	3.0	35.4	1.0	-51.1	-40.0	-11.1	
6930.00	-13.5	H	3.0	35.8	1.0	-48.3	-40.0	-8.3	
9240.00	-10.0	H	3.0	35.8	1.0	-44.9	-40.0	-4.9	
High Ch, 2312.50									
4625.00	-17.1	V	3.0	35.4	1.0	-51.5	-40.0	-11.5	
6937.50	-14.4	V	3.0	35.8	1.0	-49.2	-40.0	-9.2	
9250.00	-11.3	V	3.0	35.7	1.0	-46.0	-40.0	-6.0	
4625.00	-16.5	H	3.0	35.4	1.0	-50.9	-40.0	-10.9	
6937.50	-13.6	H	3.0	35.8	1.0	-48.4	-40.0	-8.4	
9250.00	-10.9	H	3.0	35.7	1.0	-45.6	-40.0	-5.6	

UL VERIFICATION SERVICES INC. FORM NO: CCSUP4701H
47173 BENICIA STREET, FREMONT, CA 94538, USA TEL: (510) 771-1000 FAX: (510) 661-0888
This report shall not be reproduced except in full, without the written approval of UL Verification Services Inc.

UL Verification Services
Above 1GHz High Frequency Substitution Measurement

Company: LG
Project #: 15I21442
Date: 8/3/2015
Test Engineer: D. Mun
Configuration: EUT + Headset + AC Adapter (X position)
Location: Chamber A
Mode: LTE_QPSK Band 30 Harmonics, 5MHz Bandwidth

Band
LTE30
5MHz
QPSK

f MHz	SG reading (dBm)	Ant. Pol. (H/V)	Distance (m)	Preamp (dB)	Filter (dB)	EIRP (dBm)	Limit (dBm)	Delta (dB)	Notes
Low Ch, 2307.50									
4615.00	-17.6	V	3.0	35.5	1.0	-52.1	-40.0	-12.1	
6922.50	-15.5	V	3.0	35.7	1.0	-50.2	-40.0	-10.2	
9230.00	-12.1	V	3.0	36.0	1.0	-47.1	-40.0	-7.1	
4615.00	-16.7	H	3.0	35.5	1.0	-51.2	-40.0	-11.2	
6922.50	-14.0	H	3.0	35.7	1.0	-48.7	-40.0	-8.7	
9230.00	-11.4	H	3.0	36.0	1.0	-46.4	-40.0	-6.4	
Mid Ch, 2310.00									
4620.00	-17.2	V	3.0	35.4	1.0	-51.6	-40.0	-11.6	
6930.00	-15.0	V	3.0	35.8	1.0	-49.8	-40.0	-9.8	
9240.00	-12.0	V	3.0	35.8	1.0	-46.8	-40.0	-6.8	
4620.00	-16.8	H	3.0	35.4	1.0	-51.2	-40.0	-11.2	
6930.00	-14.4	H	3.0	35.8	1.0	-49.2	-40.0	-9.2	
9240.00	-10.3	H	3.0	35.8	1.0	-45.1	-40.0	-5.1	
High Ch, 2312.50									
4625.00	-17.1	V	3.0	35.4	1.0	-51.6	-40.0	-11.6	
6937.50	-14.4	V	3.0	35.8	1.0	-49.2	-40.0	-9.2	
9250.00	-11.8	V	3.0	35.7	1.0	-46.5	-40.0	-6.5	
4625.00	-16.5	H	3.0	35.4	1.0	-50.9	-40.0	-10.9	
6937.50	-13.3	H	3.0	35.8	1.0	-48.1	-40.0	-8.1	
9250.00	-11.0	H	3.0	35.7	1.0	-45.7	-40.0	-5.7	

UL VERIFICATION SERVICES INC. FORM NO: CCSUP4701H
47173 BENICIA STREET, FREMONT, CA 94538, USA TEL: (510) 771-1000 FAX: (510) 661-0888
This report shall not be reproduced except in full, without the written approval of UL Verification Services Inc.