Package Standard Operation Procedure

SPEC. REVISED & ISSUED		Description
1	Initial release	

PAGES	1	2	3	4	5	6	7	8	9	10	G1	G2	PAGES	1	2	3	4	5	6	7	8	9	10	G1	G2
REV. NO.	1.0	1.0	1.0	*	*	*	*	*	*	*	1.0	*	REV. NO.												

TITLE :

WSMS-140X433AU1_Gasmatics (R)
P/N: 990-100-0459R

Gemtek 正文科技股份有限公司
Wireless Broadband Anywhere Gemtek Technology Co ., Ltd.

WRITER	DATE M/D/Y		REV.
Kate Jin	8/7/2018		T01

Note:
1. Pallet-layer height: Air transportation: 4 layers
Sea transportation: 6 layers
2. 防水頭線材繞成90*90mm(+/-10mm)圓圈，並用束線捆綁
3. 裝箱后Box Label需朝上
4. 棧板打包方式依廠內作業規範
5. 各零件內容之檢驗，請依各料號之材料承認書

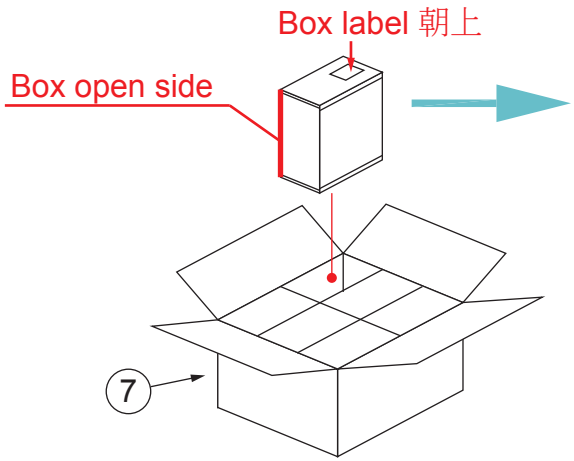

6 pcs box in 1 carton

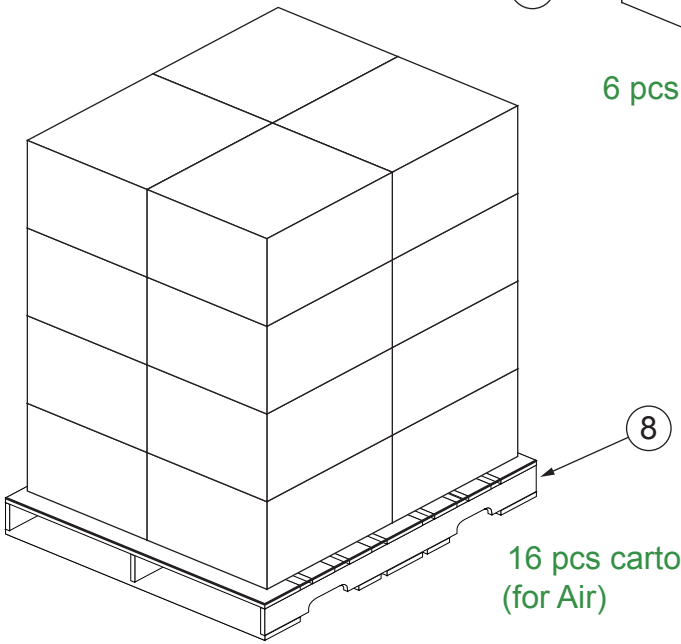

16 pcs carton in 1 pallet
(for Air)

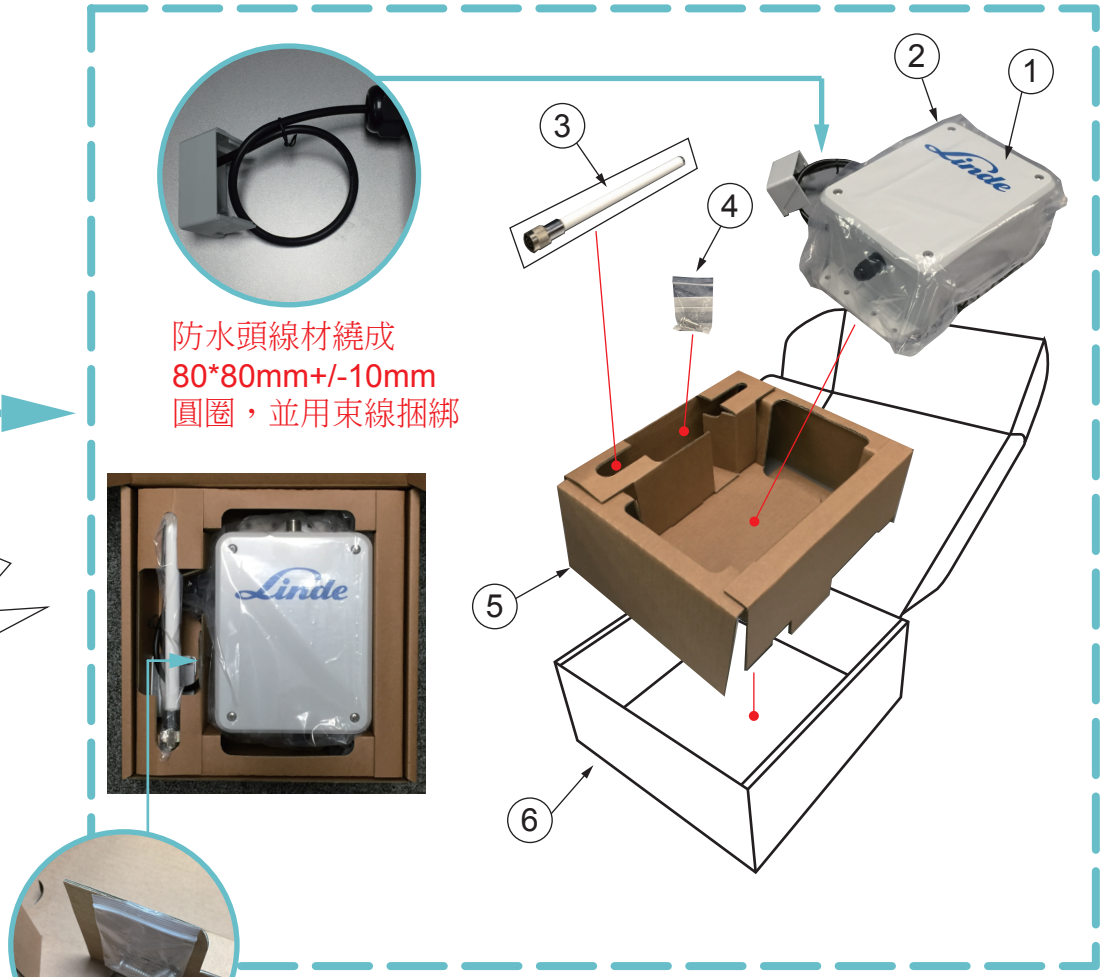

螺絲用膠帶
貼在隔板上

No	TITLE	Q'TY
1	WSMS-140	1
2	PE Bag	1
3	Antenna	1
4	Screw	1

No	TITLE	Q'TY
5	Hold-paper	1
6	Box	1
7	Carton	1/6
8	Pallet	1/96

TOLERANCE (UNLESS OTHERWISE SPEC.)	
0 ~ 29.99	± 0.10
30.0 ~ 119.99	± 0.15
120.0 ~ 299.99	± 0.20
300 or GREATER	± 0.40
ANGULAR TOL.	0± 0.50°

THIRD ANGLE PROJECTION

DESIGNED BY:
DRAWN BY: Kate Jin
APPROVED BY: Costa Tsai

Gemtek 正文科技股份有限公司
Wireless Broadband Anywhere Gemtek Technology Co ., Ltd.

INFORMATION CONTAINED ON ALL SHEETS OF THIS PRINT CAN NOT BE REPRODUCED OR USED, IN WHOLE OR IN PART, WITHOUT GEMTEK'S CONSENT. THIS NOTICE DOES NOT IMPLY PUBLICATION.

DWG TITLE : PACKAGE
MODEL NAME : WSMS-140X433AU1_Gasmatics (R)
UNIT | SCALE | SIZE | SHEET 1
DWG / PART NO. 990-100-0459R
REV. 1.0

COMPUTER GENERATED PRINT
DO NOT SCALE, DO NOT REVISE MANUALLY

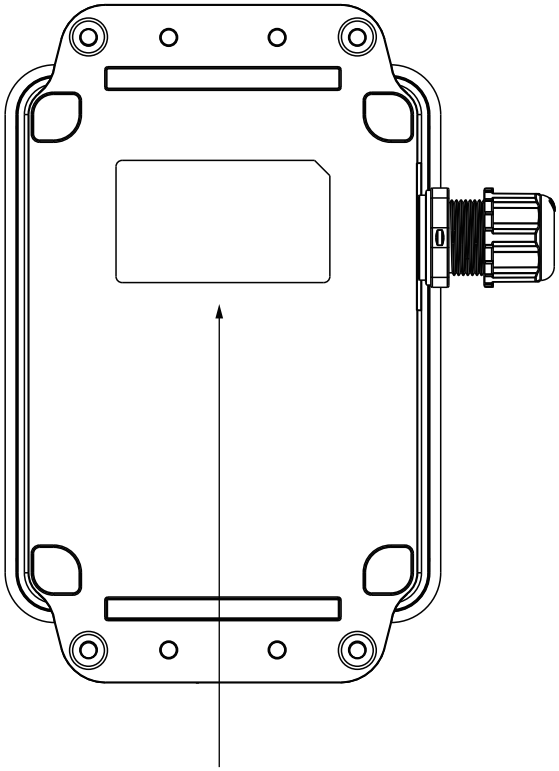

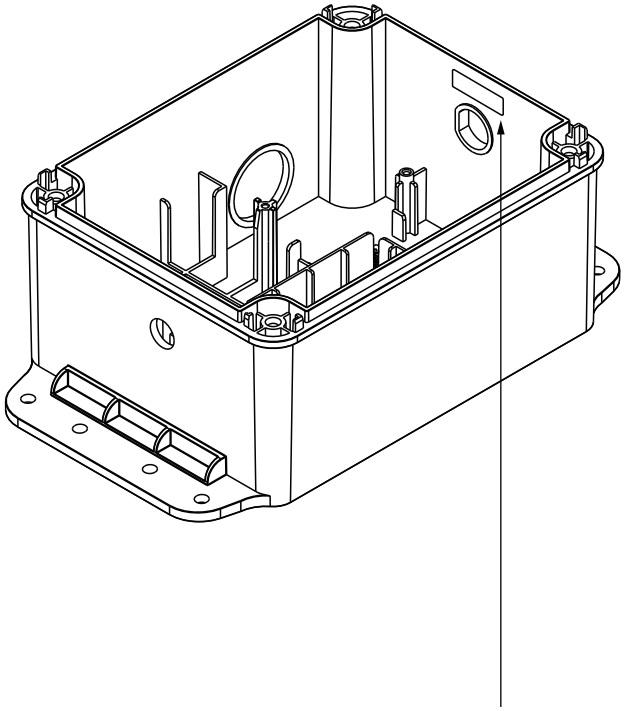

Telemetry Unit

Linde

Model name: WSMS-140_G
Type: Input Hall Effect
Linde P/N: ZZ 037601
FCC ID: MXF-WSMS-140
BLE No.: XXXXXXXXXXXX
LoRa MAC: 10XXXXXX
IP rating: IP66
Made in Taiwan

LoRa MAC:
10XXXXXX

LoRa MAC label

注意
1. Label 張貼處如圖所示，請注意張貼方向。
2. BLE No.: Gemtek Wi-Fi system 跳一號
   ex.DCFB02320000,2,4....
3. LoRa MAC: Gemtek LoRa system 10XXXXXX (共8碼)
   10 (1-2碼): 固定不變為10
   XXXXXX (3-8碼): 為流水碼
4. 其他打印資訊 - 固定不變
5. Barcode Type: Code 128
6. 字體皆為 Arial
7. 各零件內容之檢驗，請依各料號之材料承認書。

Description	Back label	P/N	420-120-1334R	Description	LoRa MAC label	P/N	420-900-0018G

Gemtek 正文科技股份有限公司 Wireless Broadband Anywhere Gemtek Technology Co ., Ltd.	TITLE : Package Standard Operation Procedure	990-100-0459R	REV. 1.0

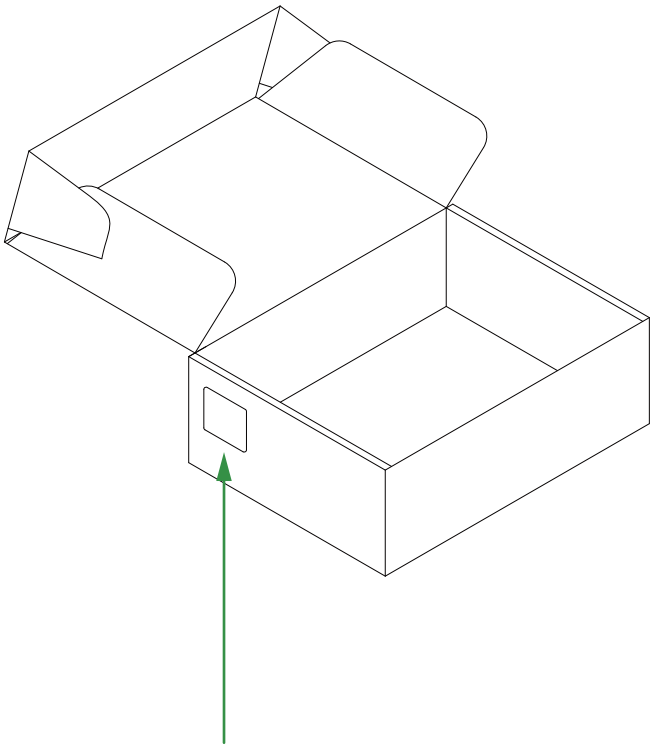

Telemetry Unit

Model name: WSMS-140_G
Type: Input Hall Effect
Linde P/N: ZZ 037601

BLE No.: XXXXXXXXXXXX

LoRa MAC: 10XXXXXX

Box label

注意
1. Box label 張貼處如圖所示，請注意張貼方向。
2. BLE No.: 同 Back label
3. LoRa MAC: 同 Back label
4. Barcode Type: Code 128
5. 字體皆為 Arial
6. 各零件內容之檢驗，請依各料號之材料承認書。

Description	Box label	P/N	42K-902-0624R	Description		P/N	

Gemtek Wireless Broadband Anywhere 正文科技股份有限公司 Gemtek Technology Co ., Ltd.	TITLE : Package Standard Operation Procedure	990-100-0459R	REV. 1.0

Carton label

Telemetry Unit

Model name: WSMS-140_G
Type: Input Hall Effect
Linde P/N: ZZ 037601

LoRa MAC:10XXXXXX

LoRa MAC:10XXXXXX

LoRa MAC:10XXXXXX

LoRa MAC:10XXXXXX

LoRa MAC:10XXXXXX

LoRa MAC:10XXXXXX

Q'TY : 6 PCS ← 依實際出貨數量變更

CNT. ID:

MADE IN TAIWAN ← 依實際生產地變更

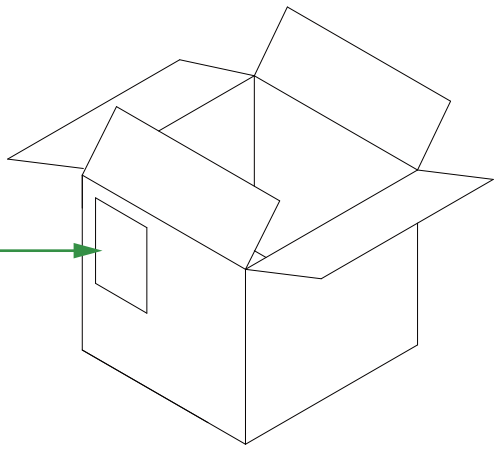

注意
1. Carton label 張貼處如圖所示，請注意張貼方向。
2. LoRa MAC: 同 Back label
3. Barcode Type: Code 128
4. 字體皆為 Arial
5. 各零件內容之檢驗，請依各料號之材料承認書。

Description	Carton label	P/N	42K-900-0715R	Description		P/N	

Gemtek 正文科技股份有限公司 Wireless Broadband Anywhere Gemtek Technology Co ., Ltd.	TITLE : Package Standard Operation Procedure	990-100-0459R	REV. 1.0