BOTTOM

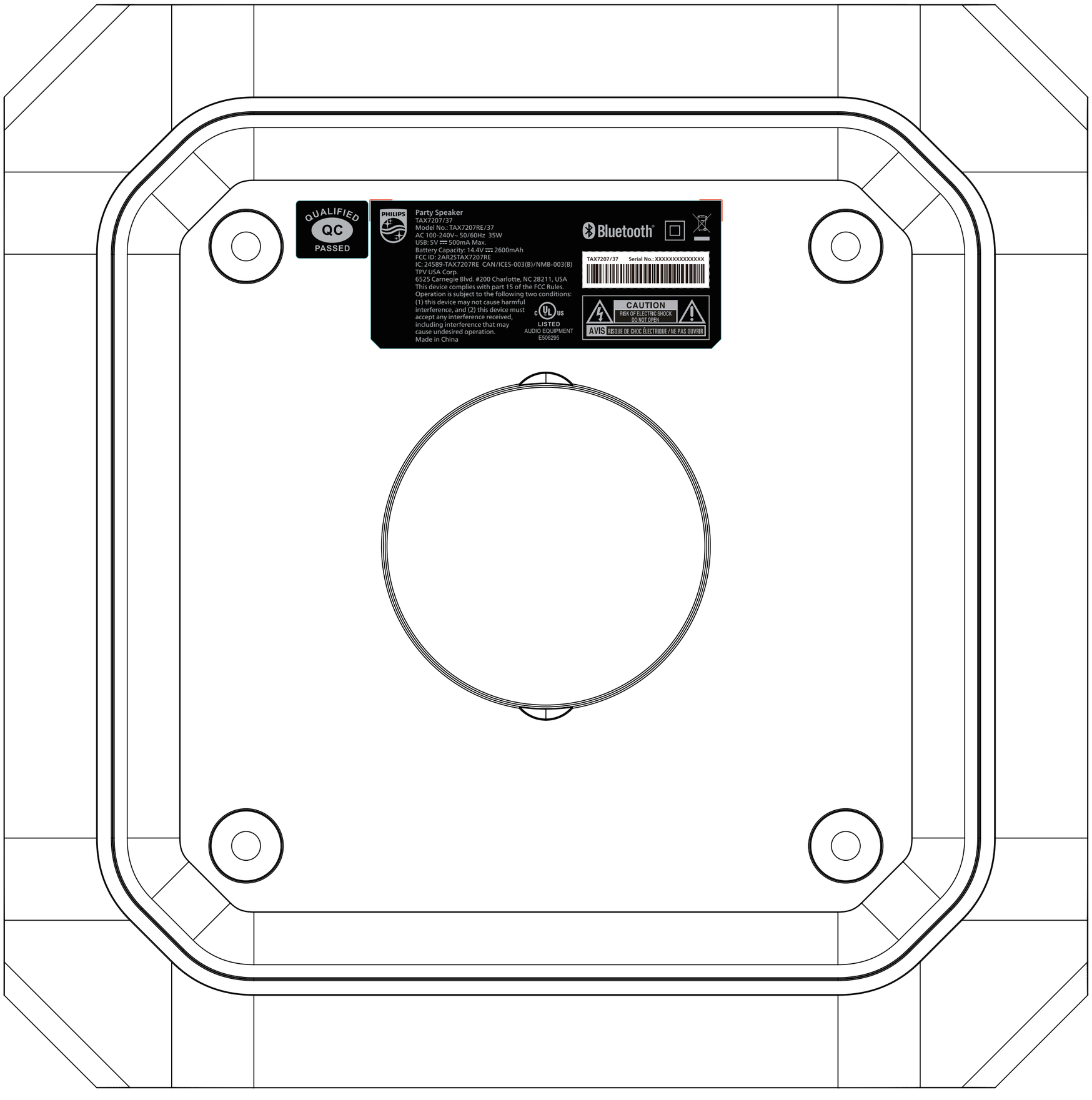
QUALIFIED
QC
PASSED
PHILIPS
Party Speaker
TAX7207/37
Model No.: TAX7207RE/37
AC 100-240V~ 50/60Hz 35W
USB: 5V ⎓ 500mA Max.
Battery Capacity: 14.4V ⎓ 2600mAh
FCC ID: 2AR2STAX7207RE
IC: 24589-TAX7207RE CAN/ICES-003(B)/NMB-003(B)
TPV USA Corp.
6525 Carnegie Blvd. #200 Charlotte, NC 28211, USA
This device complies with part 15 of the FCC Rules.
Operation is subject to the following two conditions:
(1) this device may not cause harmful interference, and (2) this device must accept any interference received, including interference that may cause undesired operation.
Made in China
c UL us
LISTED
AUDIO EQUIPMENT
E506295
Bluetooth
TAX7207/37 Serial No.: XXXXXXXXXXXXXX
CAUTION
RISK OF ELECTRIC SHOCK
DO NOT OPEN
AVIS RISQUE DE CHOC ÉLECTRIQUE / NE PAS OUVRIR