EXHIBIT D

Circuit Diagram

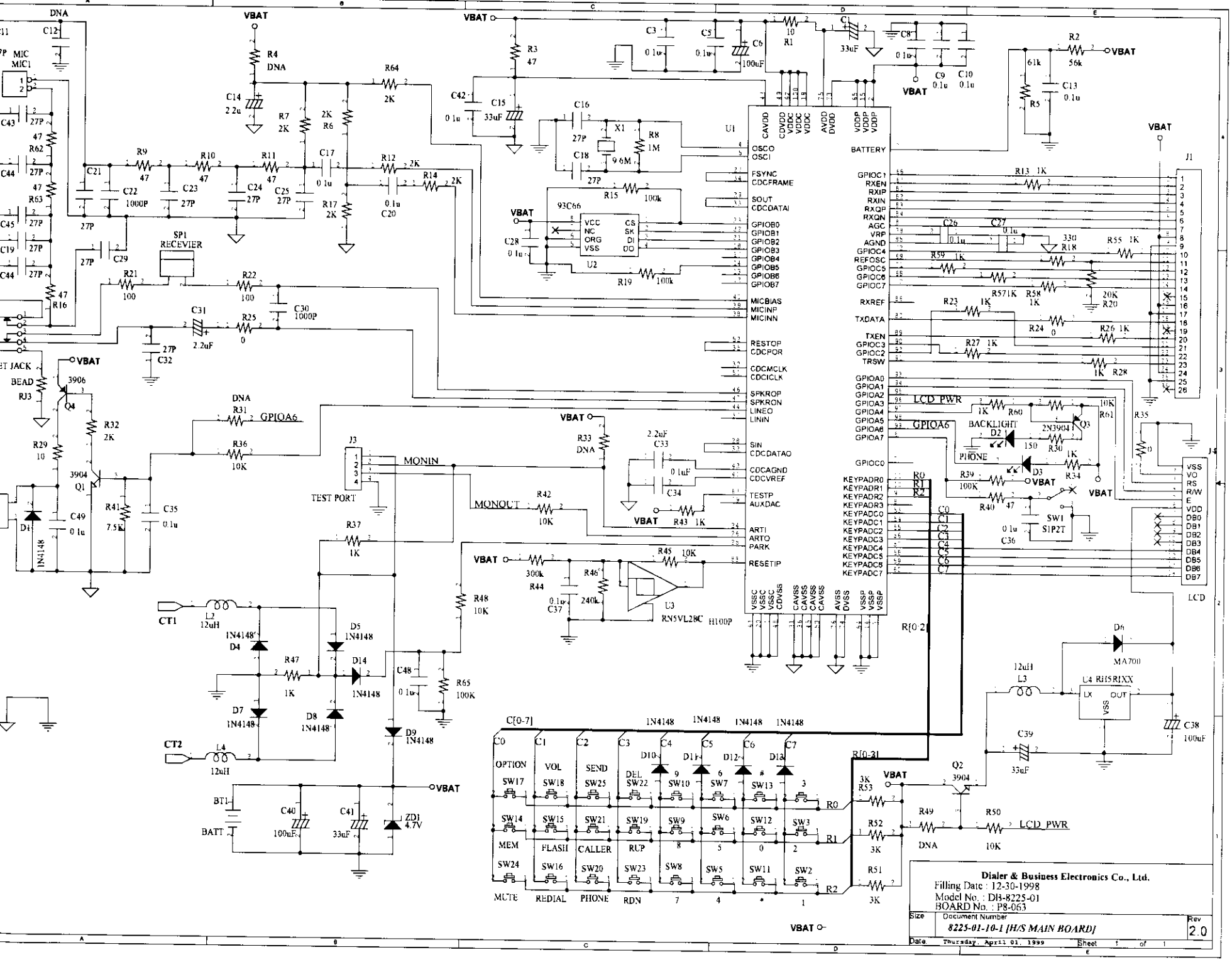

Dialer & Business Electronics Co., Ltd.
Filling Date : 12-30-1998
Model No. : DB-8225-01
BOARD No. : P8-063

Size	Document Number	Rev
	8225-01-10-1 [H/S MAIN BOARD]	2.0

Date: Thursday, April 01, 1999 Sheet 1 of 1

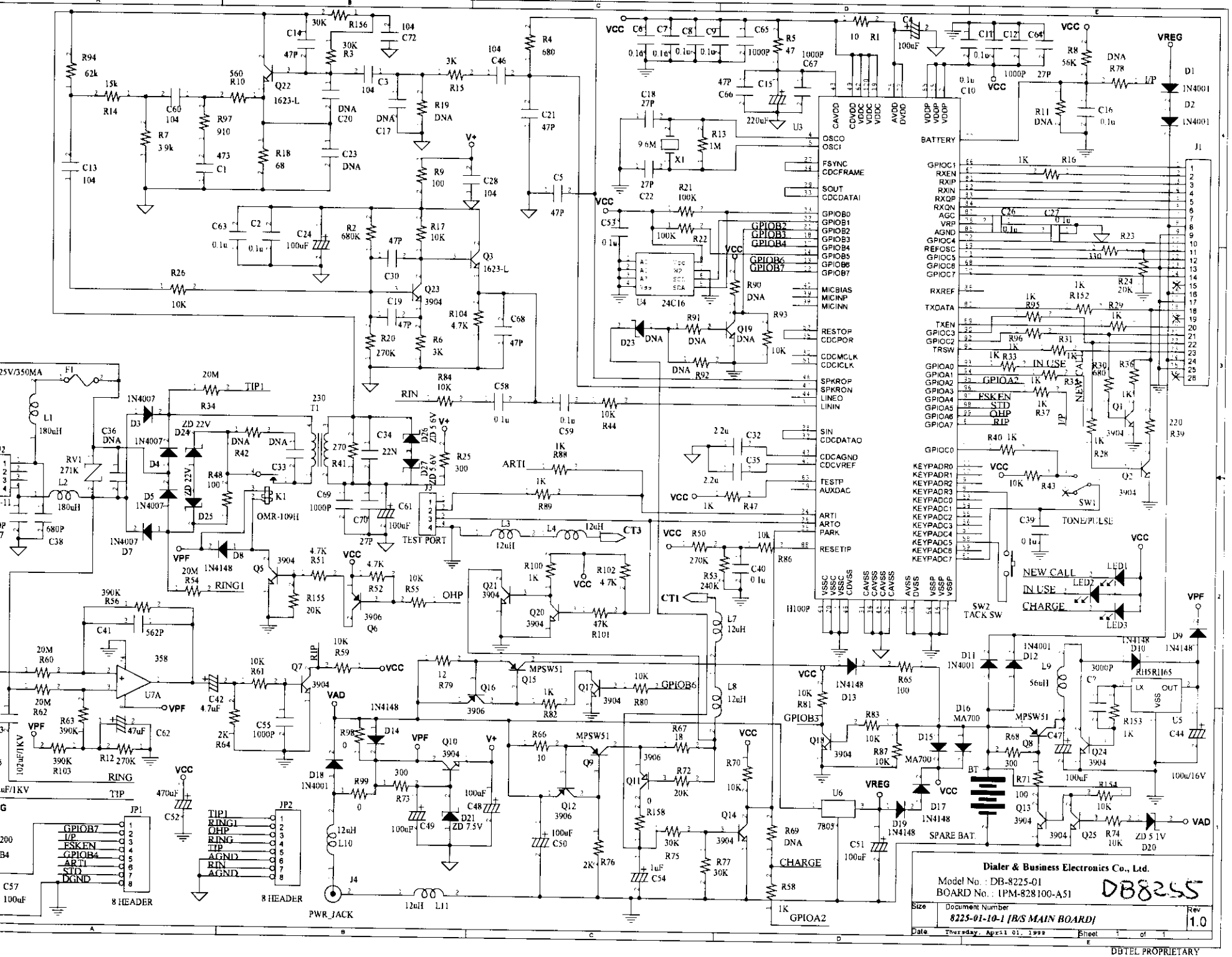

Dialer & Business Electronics Co., Ltd.
Model No. : DB-8225-01
BOARD No. : 1PM-828100-A51
DB8255
Size
Document Number
8225-01-10-1 [B/S MAIN BOARD]
Rev
1.0
Date Thursday, April 01, 1999
Sheet 1 of 1
DBTEL PROPRIETARY

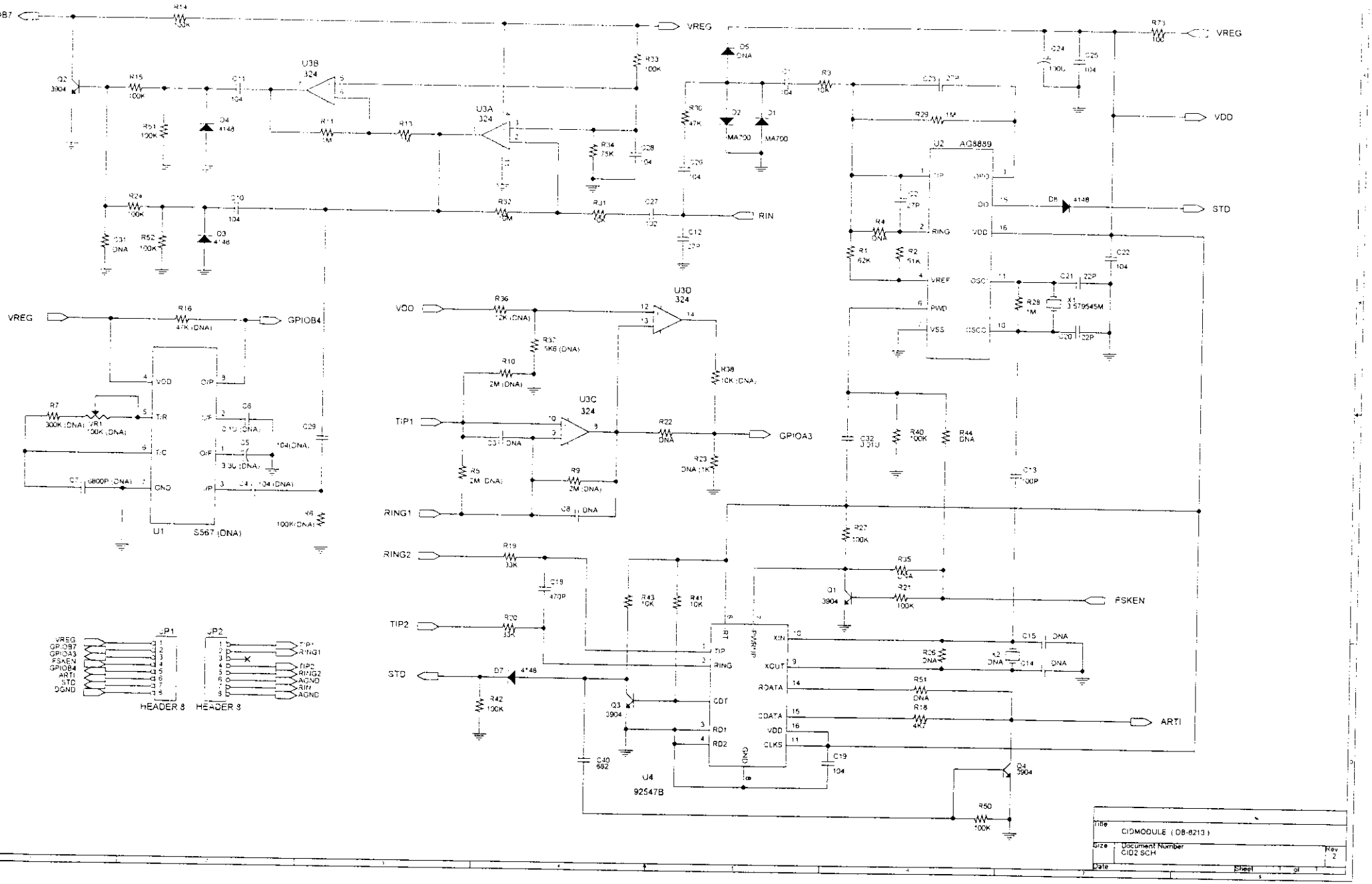
VREG
VDD
STD
RIN
GPIOB4
GPIOA3
FSKEN
ARTI
TIP1
RING1
TIP2
RING2
U2 AG8889
U3A 324
U3B 324
U3C 324
U3D 324
U1 S567 (DNA)
U4 92547B
JP1
JP2
HEADER 8
HEADER 8
CIDMODULE (DB-8213)
CID2 SCH

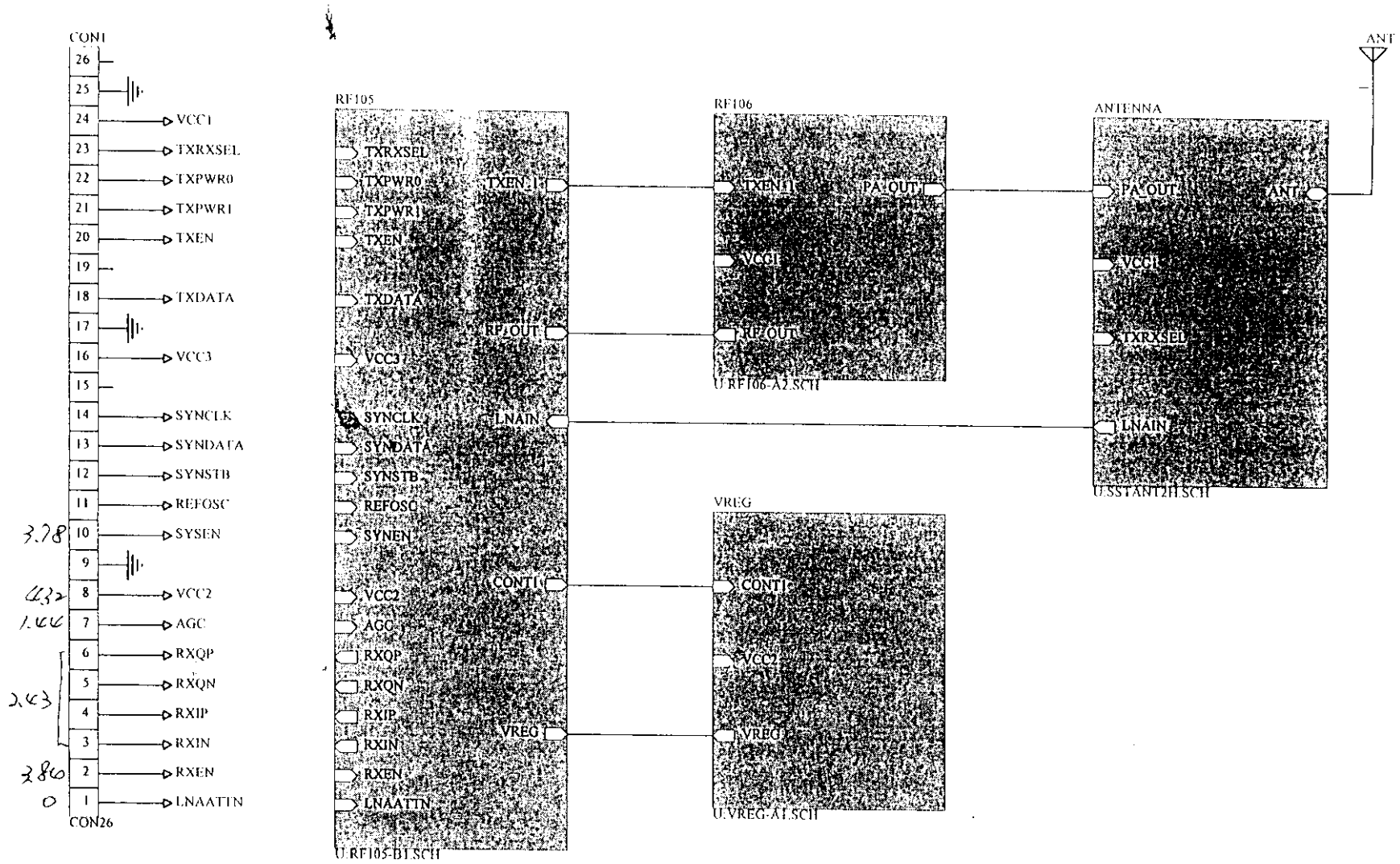

NOTES:

1. FR4 PCB ER=4.5, H=1.0mm, 1/2 oz COPPER
2. CONTROLLED IMPEDANCE: 50 ohms +/- 20%

Title	SST 900MHz RF MODULE HANDSET UNIT
Size A4	Number / Revision
Date:	1-Sep-1998 / Sheet of
File:	C:\TMP\RF_TOOLS\SST900\SST900.DSN / Drawn By

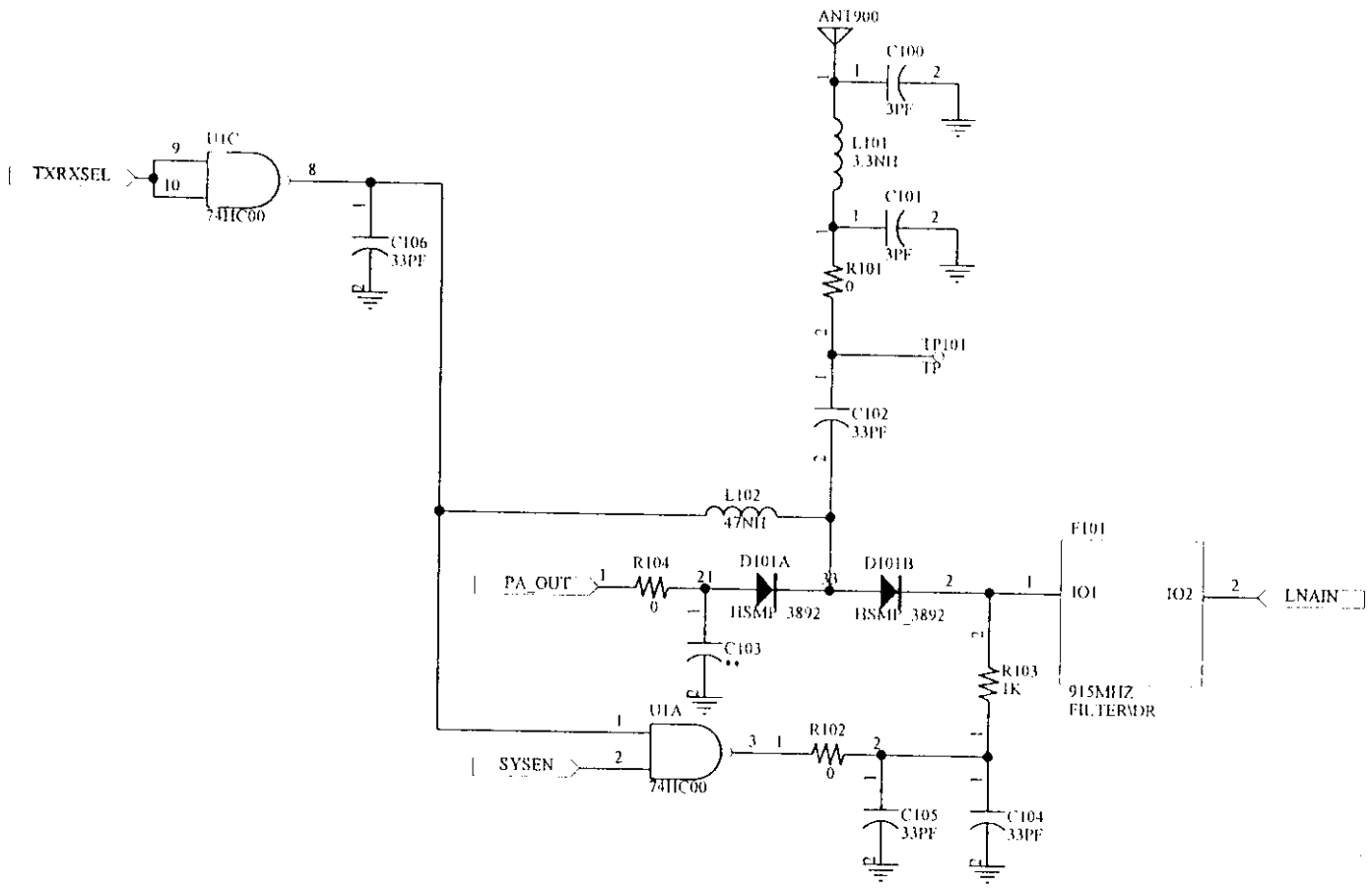

Title	SST 900MHz RF MODULE HANDSET UNIT
Size	A4
Number	
Revision	
Date:	1-Sep-1998
Sheet	of
File:	C:\TMP\RF_TOOLS\SST900\SSTANDHS.SCH
Drawn By:	

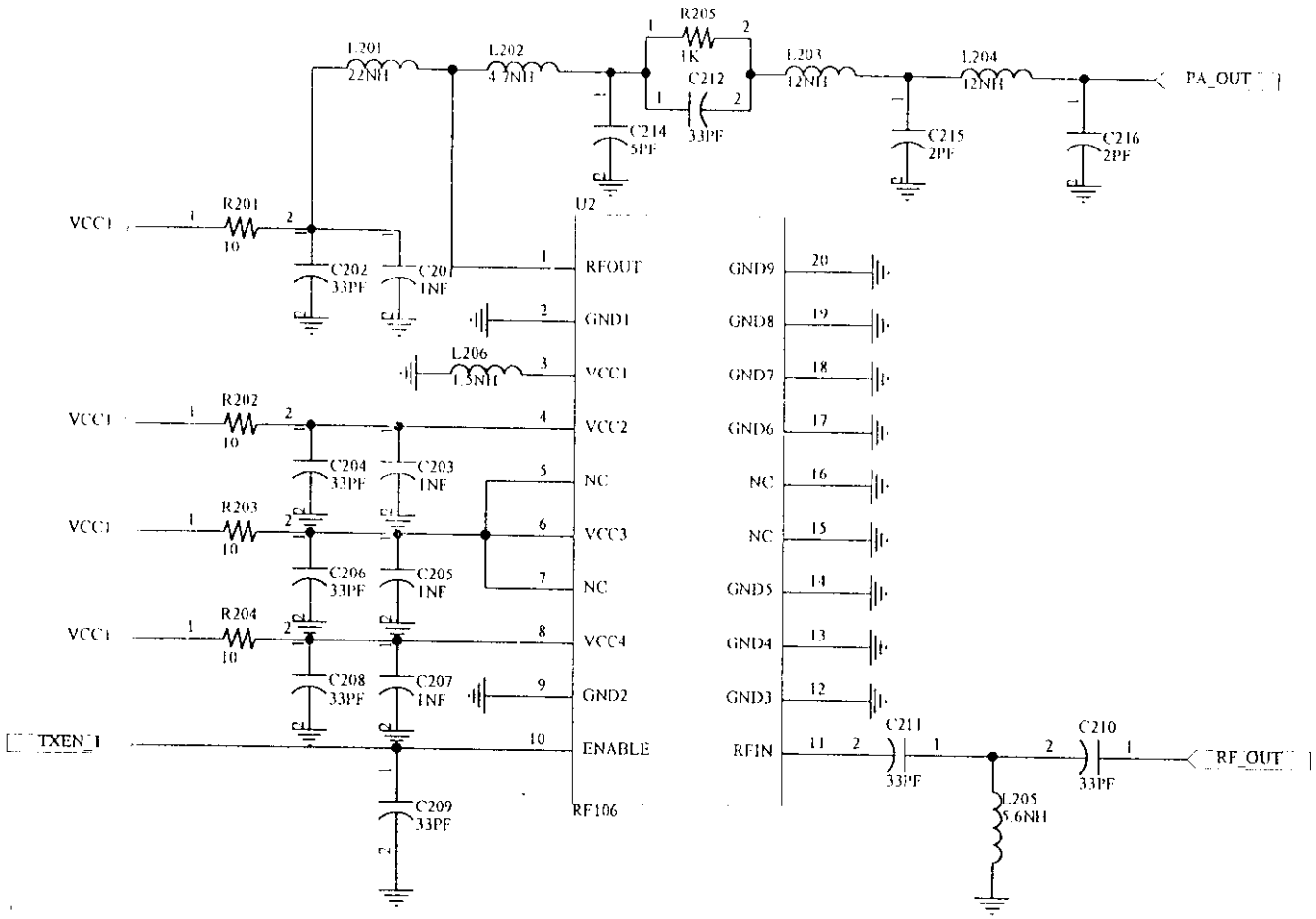

Title: SST 900MHz RF MODULE

Size: A4

Number:

Revision:

Date: 1-Sep-1998

File: C:\TMP\RF_TOOLS\SST900\RF106.SCH

Sheet of

Drawn By:

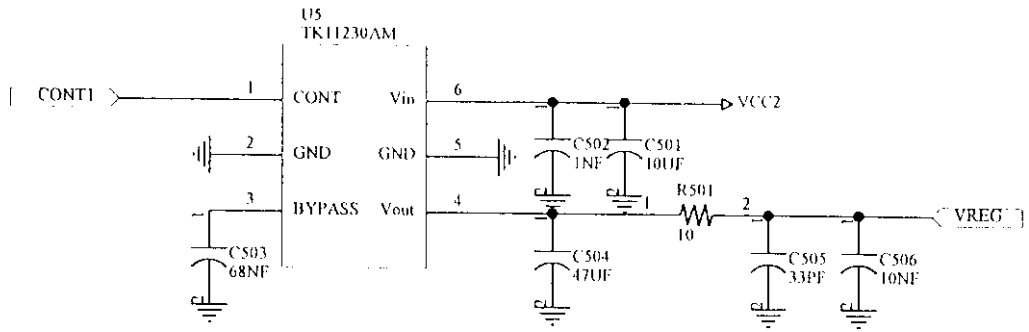

Title
SST 900MHz RF MODULE

Size
A4

Number

Revision

Date: 1-Sep-1998
File: C:\TMP\RF_TOOLS\SST900\VREG.DSN

Sheet of

Drawn By

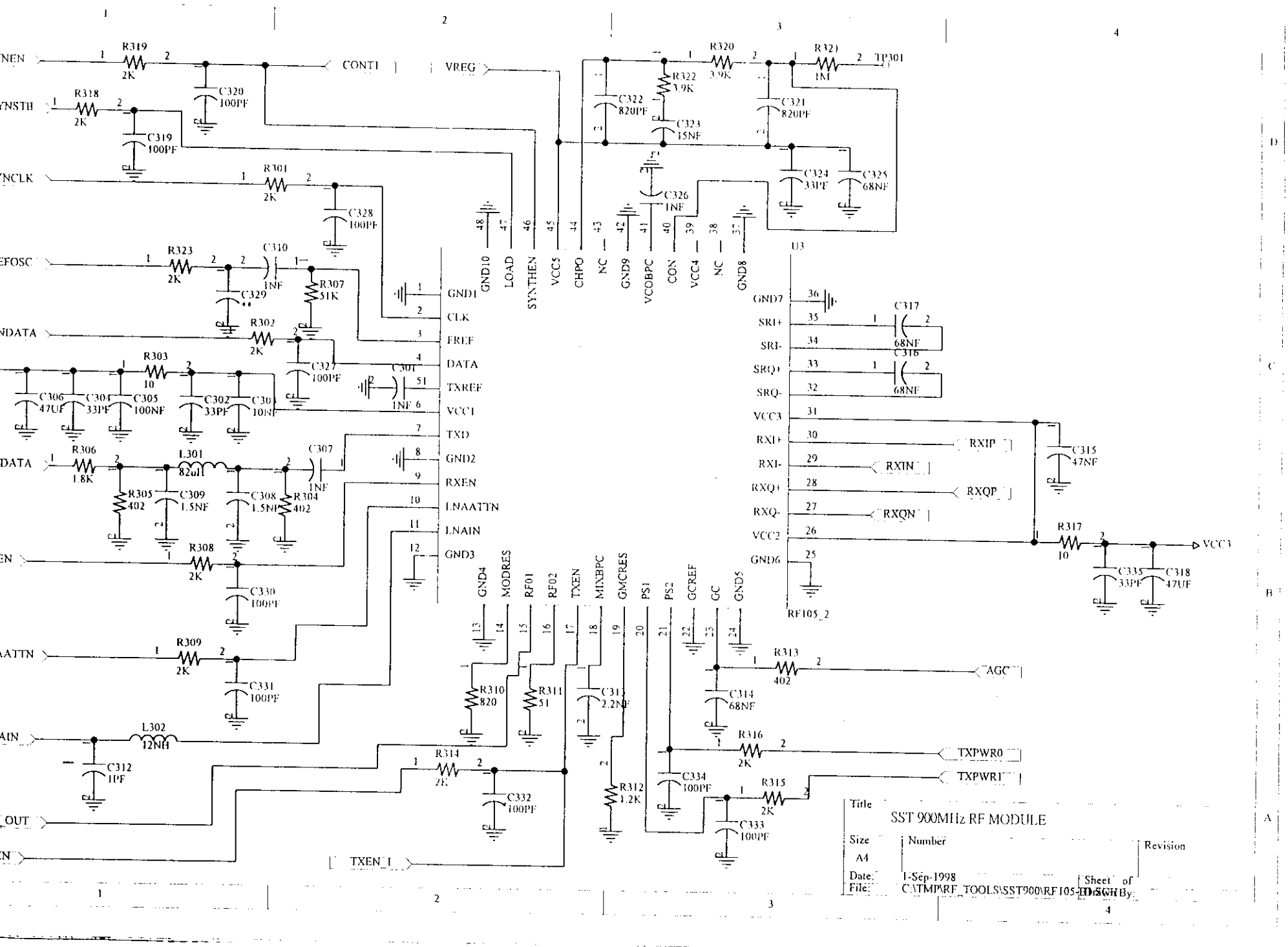
U3
RF105_2
GND1
CLK
FREF
DATA
TXREF
VCC1
TXD
GND2
RXEN
LNAATTN
LNAIN
GND3
GND4
MODRES
RF01
RF02
TXEN
MIXBPC
GMCRES
PS1
PS2
GCREF
GC
GND5
GND6
VCC2
RXI-
RXI+
SRQ-
SRQ+
SRI-
SRI+
GND7
VCC3
GND8
NC
VCC4
CON
VCOBPC
GND9
CHPO
VCC5
SYNTHEN
LOAD
GND10
CONTI
VREG
TP301
RXIP
RXIN
RXQP
RXQN
VCC3
AGC
TXPWR0
TXPWR1
TXEN_I
Title
SST 900MHz RF MODULE
Size
A4
Number
Revision
Date:
1-Sep-1998
File:
C:\TMP\RF_TOOLS\SST900\RF105-D.SCH
Sheet of
Drawn By:

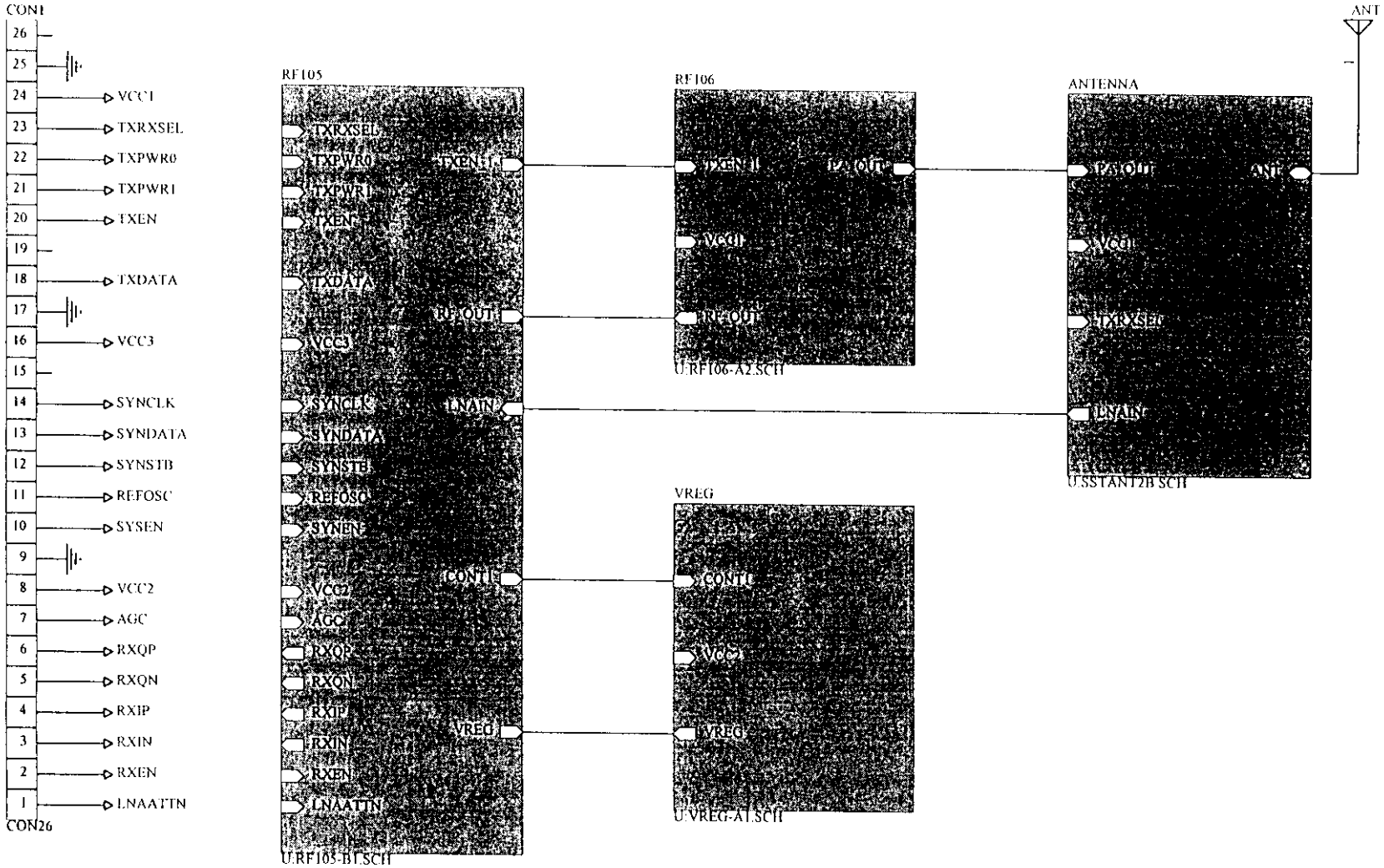

NOTES:

1. FR4 PCB ER=4.5, H=1.0mm, 1/2 oz COPPER
2. CONTROLLED IMPEDANCE 50 ohms +/- 20%

Title	SST 900MHz RF MODULE BASE UNIT	
Size A4	Number	Revision
Date: 1-Sep-1998	Sheet of	
File: C:\TMP\RF_TOOLS\SST900\SST900	Drawn By:	

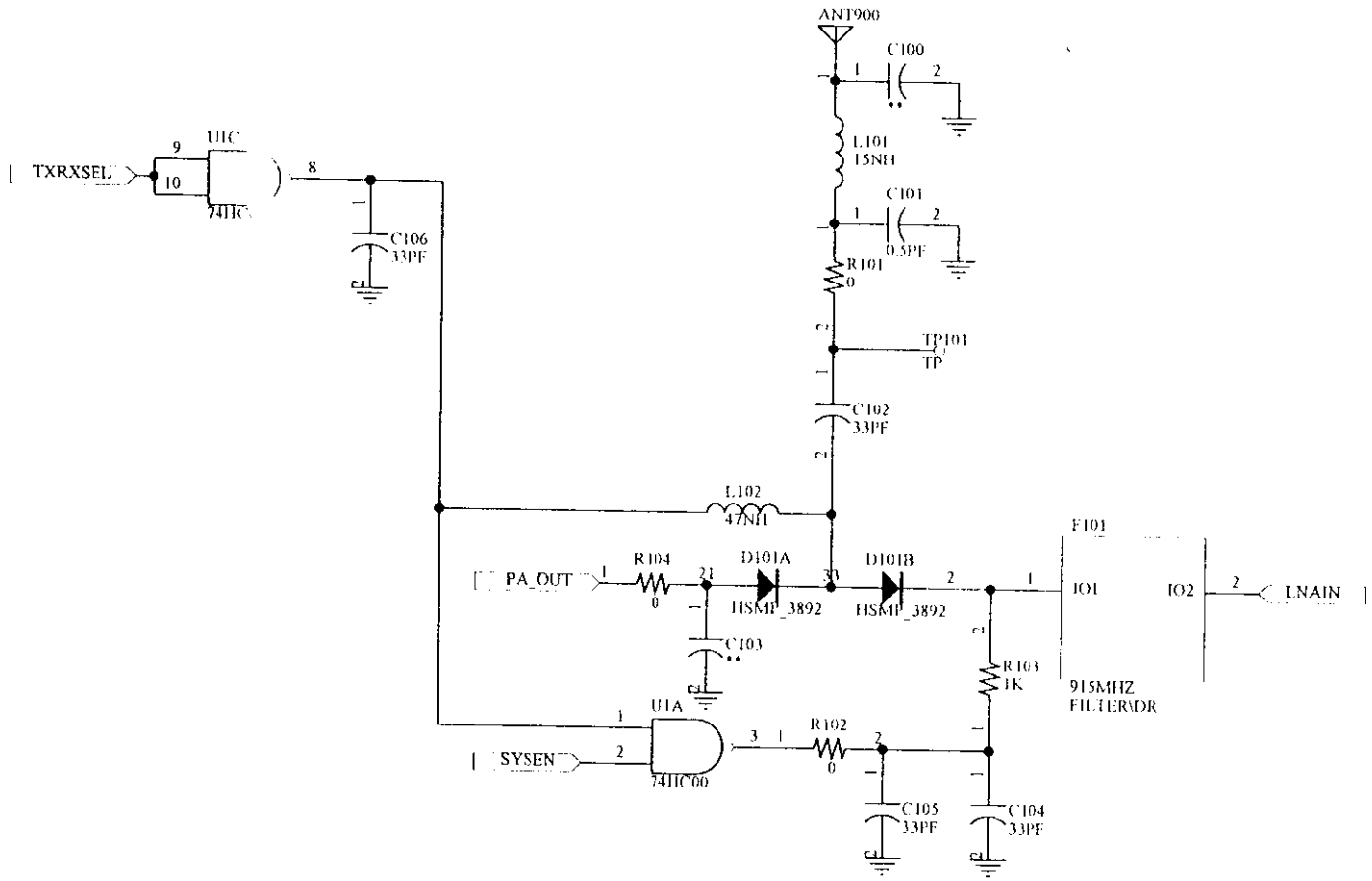

Title	SST 900MHz RF MODULE BASE UNIT	
Size A4	Number	Revision
Date: 1-Sep-1998		Sheet of
File: C:\TMP\RF_TOOLS\SST900\SSTANT.DSN		Drawn by:

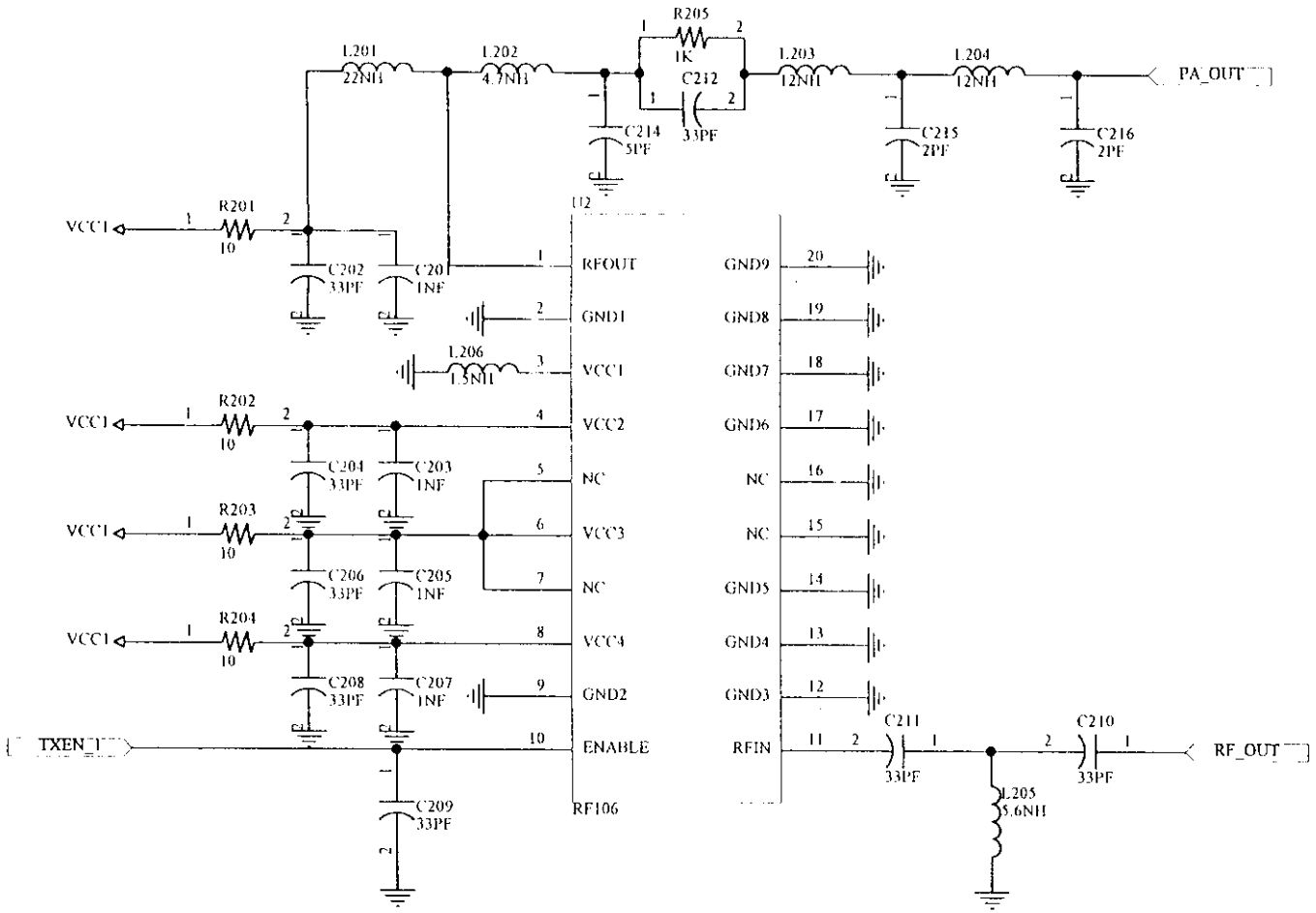

Title
SST 900MHz RF MODULE

Size	Number	Revision
A4		

Date: 1-Sep-1998 Sheet of
File: C:\TMP\RF_TOOLS\SST900\RF106-A.SCH Drawn By:

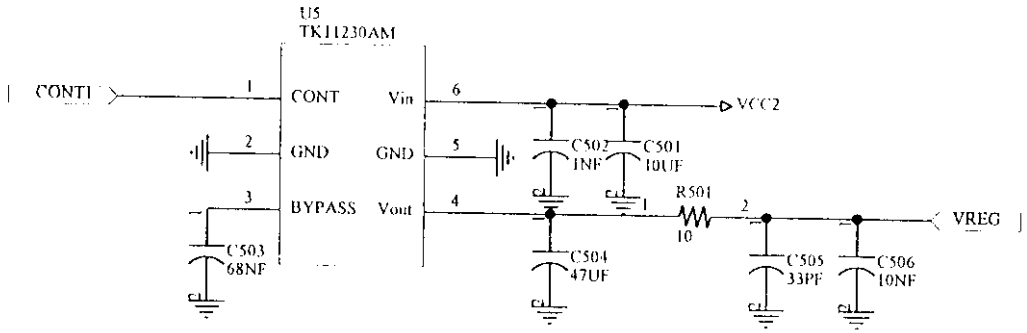

Title
SST 900MHz RF MODULE

Size
A4

Number

Revision

Date: 1-Sep-1998
File: C:\TMP\RF_TOOLS\SST900\VREG-A.SCH

Sheet of

Drawn By:

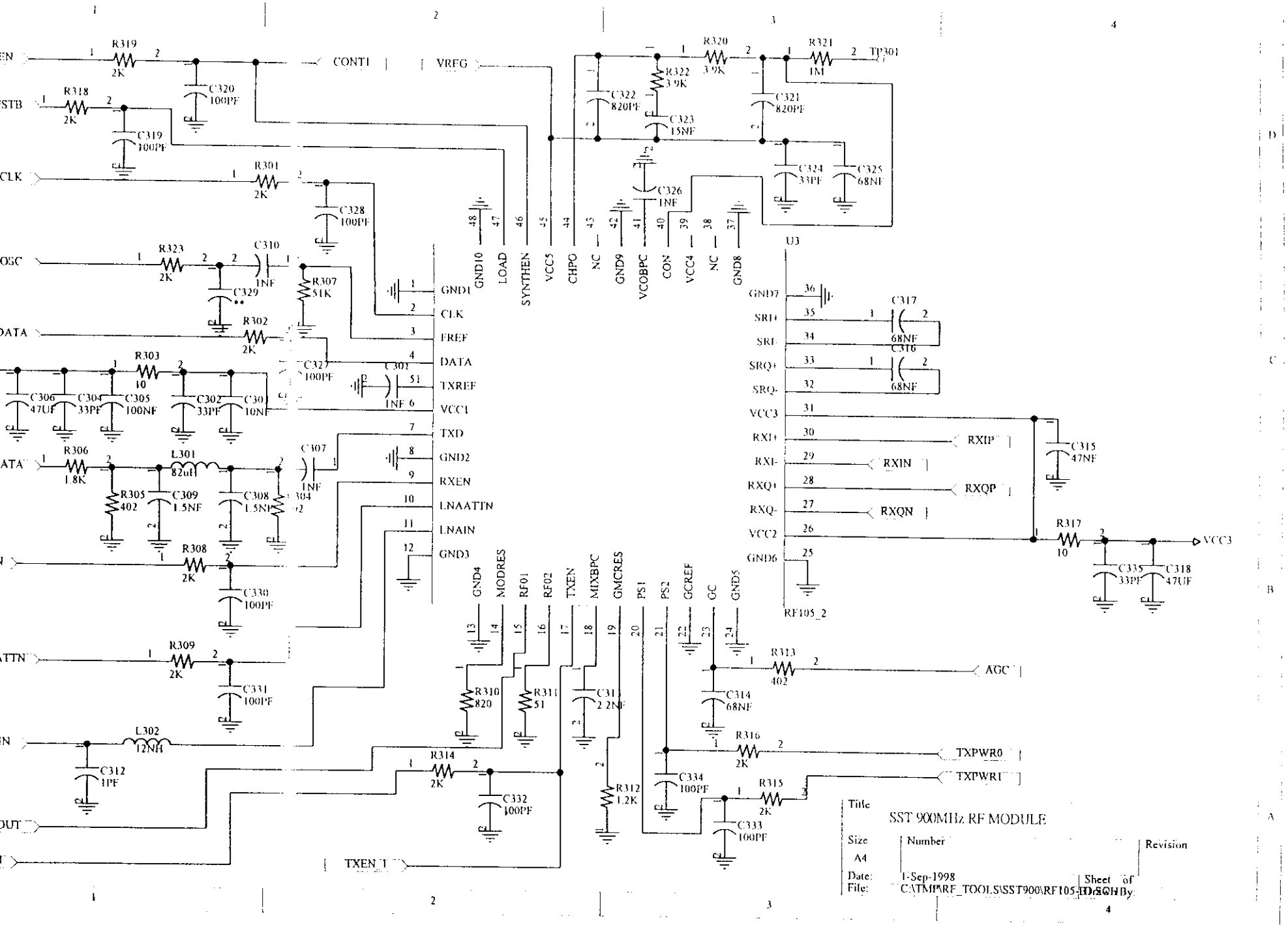
U3
RF105_2
GND1
CLK
FREF
DATA
TXREF
VCC1
TXD
GND2
RXEN
LNAATTN
LNAIN
GND3
GND4
MODRES
RF01
RF02
TXEN
MIXBPC
GMCRES
PS1
PS2
GCREF
GC
GND5
GND6
VCC2
RXQ-
RXQ+
RXI-
RXI+
VCC3
SRQ-
SRQ+
SRI-
SRI+
GND7
GND8
NC
VCC4
CON
VCOBPC
GND9
CHPO
VCC5
SYNTHEN
LOAD
GND10
CONT1
VREG
RXIP
RXIN
RXQP
RXQN
AGC
TXPWR0
TXPWR1
TXEN_1
VCC3
TP301
Title
SST 900MHz RF MODULE
Size
A4
Number
Revision
Date: 1-Sep-1998
Sheet of
File: C:\TMP\RF_TOOLS\SST900\RF105-D.SCH
Drawn By: