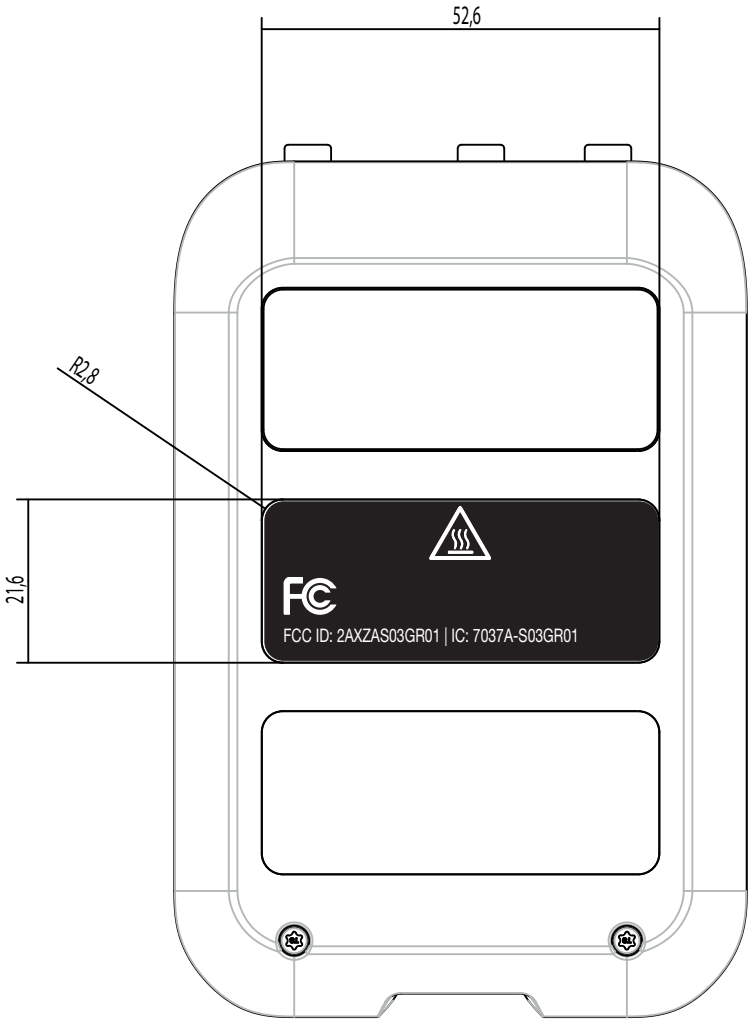

Smart-Ex 03 Blanko Label Battery

Material:	Schreiner Color Laser Film 2 Black/White (20-152/39-38) PrBe-No. 1294/3
Label Colour:	Black
Size:	52,1±0,2 x 21,1±0,2 mm
Printfile:	10-DA68_Laserfile

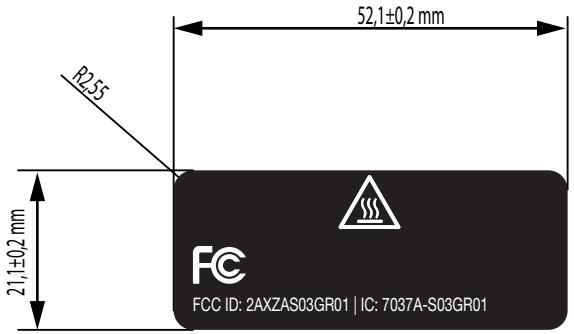

ecom
A PEPPERL+FUCHS BRAND
ECOM Instruments GmbH
Industriestraße 2
97959 Assamstadt | Germany
Tel.: +49 6294 4224 0
Fax: +49 6294 4224 100
E-Mail: sales@ecom-ex.com
www.ecom-ex.com

Rev. Rev.	Name name	erstellt am created on	geprüft ProdM reviewed ProdM	geprüft Appro. reviewed Appro.	gepr. Regulatory revie. Regulatory	Produktion Extern Production External	Produktion Intern Production internal	dimensions without tolerances follow	CONFIDENTIAL acc. to	Bezeichnung designation	Zeichnungs-Nr.: drawing-No.:	Rev.
	NU0055	28.11.23	see EDM	see EDM	see EDM		X	ISO 2768-mk E	ISO 16016	Smart-Ex 03 Blanko Label Battery	10-DA68	A
										Only valid as long as released in EDM,	Artikel-Nr.: product code:	Maßstab scale 1:1
												Blatt page 1/1