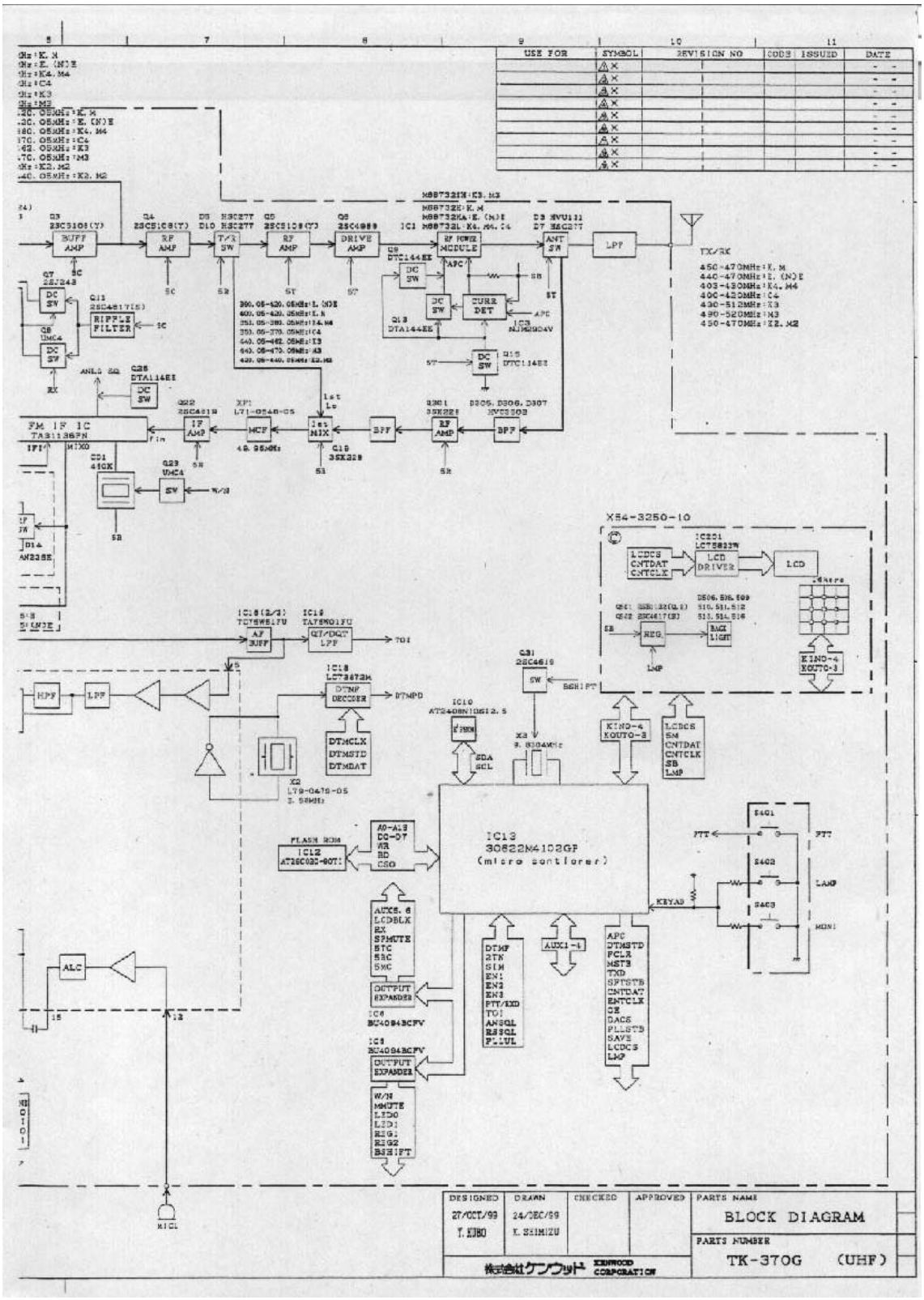

BLOCK DIAGRAM(RIGHT)

Model Name:TK-370GK3/TK-360GK3

FCC ID:ALH29473130