Owner´s Manual DEA700 Radio

Commented [GL1]: Update Radio render to reflect front mic hole

Style Definition: TOC 2: Tab stops: 2.66", Right,Leader: …

~~2019~~MY

~~Delphi~~Aptiv

~~MY 2019~~1/16/2020

Contents

DEA7XX Radios System 94
Introduction 94
Overview 104
Radio Pinout 114
Radio Button Operation 135
SRC/PWR 135
One-Hour Timer 135
VOLUME KNOB/OK 145
PREV (Previous/Reverse): 145
NEXT (Next/Forward): 145
PHONE (If equipped) 145
SCAN/ASCAN 145
PLAY/PAUSE: 145
RPT (Repeat): 145
BROWSE 145
RDM (Random) 145
ESC/SCR (ESCAPE) 145
DISP (DISPLAY) 145
Radio 156
Audio Source 156
AM-FM-WX/LW Radio 156
Tuning 156
Manual Tuning 156
Seeking a Station 156
Presets 156
Storing Radio Station Presets 156
Tuning Radio Station Presets 156
SCAN 156
AUTOSCAN 156
WX 167
LW 167
SXM (If Equipped) 167
SXM Display 167
SXM Categories selection 167
SXM Channel Selection 167
Storing Station Presets 177
SXM Radio ID: 177
SXM Messages 177
Traffic Announcement (TA) 188
DAB Announcement 188
DAB Announcement Category 188
Alternate Frequency (AF)/ Service Following (DAB-FM link) 188
Regional 188
Refresh List 188
Emergency Alert 189
Storing Station Presets 189
DAB Messages 189
Station Not Available 189
No Signal 189
Station Currently Unavailable 189
No info 189
iPod 199
Playing from an iPod 199
iPod Menu 199
Playlists: 199
Artists: 199
Albums: 1910
Genres: 1910
Podcasts: 1910
Songs: 1910
Composers: 1910
Audio Books: 1910
PREV (Previous): 1910
NEXT (Next): 2010
FF/FR (Fast Forward/Fast Reverse). 2010
RDM (Random): 2010
RPT (Repeat): 2010
Error Messages 2010
USB 2010
Playing from a USB 2010
USB MP3 Player and USB 2010
Drives 2010
For MP3 Files 2011
For Unprotected WMA Files 2011
Playing an USB Device 2011
Front Auxiliary 2111
Rear Auxiliary 2111
Bluetooth (If Equipped) 2111
Enabling/Disabling Bluetooth 2111
Pairing a Bluetooth Device 2211
Connecting a Device 2212

Formatted: Font: (Default) Times New Roman, 12 pt

Disconnecting a Device 2212
Deleting one or all Devices 2212
Hands Free/ Bluetooth Features 2212
DIAL MENU 2212
DIAL REDIAL 2312
FAVORITES 2312
DIAL CONTACT 2312
LAST CALLS 2313
CALL OPTIONS 2313
BT Audio 2413
Bluetooth Player 2413
Radio System Settings 2414
Audio Control Menu 2414
BASS 2414
MIDDLE 2514
TREBLE 2514
FADE 2514
BALANCE 2514
AUTO EQ 2514
User Menu 2514
Speakers (SPEAKERS) 2615
Speed Dependent Volume (SPEED DEP VOL) 2615
Seek Sensitivity (SEEK SEN) 2615
Tune Configuration (TUNE CFG) 2615
Category Enable/Disable (CAT E/D) 2615
Regional 2615
Traffic Announcement(TA) 2615
DAB Ammouncement 2615
DAB Ammouncement Categories 2615
Alternative Frequencies (AF) 2615
Refresh List 2715
CLOCK 2715
Dimming (DIMMING) 2716
HUE Adjustment (HUE ADJ) 2716
ALARM 2716
Audio Players 2716
Music Navigation USB 2916
OPTIONAL EQUIPMENT 2916
Infrared Remote Control 2916
Fuse 3017
Tips and Troubleshooting Chart 3017
Radio 3017
Unable to tune stations 3017
iPod 3017
iPod does not play or there is no sound
iPod not functioning 3017
Bluetooth 3017
My radio doesn't recognize my Bluetooth enabled device. 3017
The device and my radio can't communicate. 3117
Device music cannot be heard 3118
Rear Seat Audio (RSA) 3118
The RSA shows no link. 3118
Trademarks and License Agreements 3118
Precautions 3118
Product Cleaning 3118
Bluetooth Distraction 3218
DEA7XX Radios System 5
Introduction 5
Overview 5
Radio Pin out 6
Radio pinout is shown below 6
Radio Button Operation 7
SRC/PWR 7
One Hour Timer 7
VOLUME KNOB/OK 7
PREV (Previous/Reverse): 7
NEXT (Next/Forward): 7
PHONE (If equipped) 7
CLOCK/ALARM 7
SCAN/ASCAN 7
PLAY/PAUSE: 7
RPT (Repeat): 7
BROWSE 7
RDM (Random) 7
ESC/SCR (ESCAPE) 7
DISP (DISPLAY) 7

Formatted: TOC 2

Formatted: TOC 2

Formatted: TOC 2, Tab stops: Not at 2.66"

Radio 7
Audio Source 7
AM-FM-WX/LW Radio 7
Tuning 7
Manual Tuning 8
Seeking a Station 8
Presets 8
Storing Radio Station Presets 8
Tuning Radio Station Presets 8
SCAN 8
AUTOSCAN 8
WX 8
LW 8
SXM (If Equipped) 8
SXM Display 8
SXM Categories selection 9
SXM Channel Selection 9
Storing Station Presets 9
SXM Radio ID: 9
SXM Messages 9
DAB (If Equipped) 10
Traffic Announcement (TA) 10
DAB Announcement 10
DAB Announcement Category 10
Alternate Frequency (AF)/ Service Following (DAB-FM link) 10
Regional 10
Refresh List 10
Emergency Alert 10
Storing Station Presets 10
DAB Messages 10
Station Not Available 10
No Signal 11
Station Currently Unavailable 11
iPod 11
Playing from an iPod 11
iPod Menu 11
Playlists: 11
Artists: 11
Albums: 11
Genres: 11
Podcasts: 11
Songs: 11
Composers: 11
Audio Books: 11
PREV (Previous): 12
NEXT (Next): 12
FF/FR (Fast Forward/Fast Reverse) 12
RDM (Random): 12
RPT (Repeat): 12
Error Messages 12
USB 12
Playing from a USB 12
USB MP3 Player and USB Drives 12
For MP3 Files 12
For Unprotected WMA Files 12
Playing an USB Device 12
Front Auxiliary 12
Rear Auxiliary 13
Bluetooth (If Equipped) 13
Enabling/Disabling Bluetooth 13
Pairing a Bluetooth Device 13
Connecting a Device 13
Disconnecting a Device 13

Formatted: TOC 2
Formatted: TOC 2
Formatted: TOC 2, Tab stops: Not at 2.66"
Formatted: TOC 2, Tab stops: Not at 2.66"
Formatted: TOC 2, Tab stops: Not at 2.66"
Formatted: TOC 2
Formatted: TOC 2, Tab stops: Not at 2.66"
Formatted: TOC 2, Tab stops: Not at 2.66"
Formatted: TOC 2
Formatted: TOC 2
Formatted: TOC 2, Tab stops: Not at 2.66"
Formatted: TOC 2, Tab stops: Not at 2.66"
Formatted: TOC 2
Formatted: TOC 2

Deleting one or all Devices 14
Hands Free/ Bluetooth Features 14
DIAL MENU 14
DIAL REDIAL 14
FAVORITES 14
DIAL CONTACT 14
LAST CALLS 14
CALL OPTIONS 14
BT Audio 15
Bluetooth Player 15
Radio System Settings 15
Audio Control Menu 15
BASS 15
MIDDLE 16
TREBLE 16
FADE 16
BALANCE 16
AUTO EQ 16
User Menu 16
Speakers (SPEAKERS) 16
Speed Dependent Volume (SPEED DEP VOL) 16
Seek Sensitivity (SEEK SEN) 16
Tune Configuration (TUNE CFG) 16
Category Enable/Disable (CAT E/D) 16
Regional 16
Traffic Announcement(TA) 17
DAB Ammouncement 17
DAB Ammouncement Categories 17
Alternative Frecuencies (AF) 17
Refresh List 17
CLOCK 17
Dimming (DIMMING) 17
HUE Adjustment (HUE ADJ) 17
ALARM 17
Audio Players 17
Music Navigation USB 18
OPTIONAL EQUIPMENT 18
Infrared Remote Control 18
Fuse 18
Tips and Troubleshooting Chart ... 18
Radio 18
Unable to tune stations 18
iPod 18
iPod does not play or there is no sound 18
iPod not functioning 19
Bluetooth 19
My radio doesn't recognize my Bluetooth enabled device. 19
The device and my radio can't communicate. 19
Device music cannot be heard 19
Rear Seat Audio (RSA) 19
The RSA shows no link. 19
Trademarks and License Agreements 19
Precautions 20
Product Cleaning 20
Bluetooth Distraction 20
Conformity assessment issues 20
FCC/IC Regulatory Notice 20
Modification statement 20
Interference statement 20
Radiation Exposure Statement 20
FCC Class B digital device notice 20

Formatted: TOC 2, Tab stops: Not at 2.66"
Formatted: TOC 2, Tab stops: Not at 2.66"
Formatted: TOC 2, Tab stops: Not at 2.66"
Formatted: TOC 2, Tab stops: Not at 2.66"
Formatted: TOC 2
Formatted: TOC 2, Tab stops: Not at 2.66"
Formatted: TOC 2
Formatted: TOC 2, Tab stops: Not at 2.66"
Formatted: TOC 2
Formatted: TOC 2, Tab stops: Not at 2.66"
Formatted: TOC 2
Formatted: TOC 2
Formatted: TOC 2
Formatted: TOC 2, Tab stops: Not at 2.66"
Formatted: TOC 2, Tab stops: Not at 2.66"
Formatted: TOC 2, Tab stops: Not at 2.66"

CAN ICES-3 (B) / NMB-3 (B) 20
Simplified EU Declaration of Conformity/RED 2014/53/EU 22
DEA5XX Radios System 5
Introduction 5
Overview 5
Radio Pin-out 6
Radio pinout is shown below 6
Radio Button Operation 6
SRC/PWR 6
One-Hour Timer 6
VOLUME KNOB/OK 6
PREV (Previous/Reverse): 6
NEXT (Next/Forward): 6
EJECT 6
PHONE (If equipped) 7
CLOCK/ALARM 7
SCAN/ASCAN 7
PLAY/PAUSE: 7
RPT (Repeat): 7
BROWSE 7
RDM (Random) 7
ESC (ESCAPE) 7
DISP (DISPLAY) 7
Radio 7
Audio Source 7
AM-FM-WX Radio 7
Tuning 7
Manual Tuning 7
Seeking a Station 7
Presets 8
Storing Radio Station Presets 8
Tuning Radio Station Presets 8
SCAN 8
AUTOSCAN 8
WX 8
SXM (If Equipped) 8
SXM Display 8
SXM Categories 8
SXM Channel Selection 9
SXM Radio ID: 9
SXM Messages 9
iPod 9
Playing from an iPod 10
iPod Menu 10
Playlists: 10
Artists: 10
Albums: 10
Genres: 10
Podcasts: 10
Songs: 10
Composers: 10
Audio Books: 10
PREV (Previous): 10
NEXT (Next): 10
FF/FR (Fast Forward/Fast Reverse) 11
RDM (Random): 11
RPT (Repeat): 11
Error Messages 11
USB 11
Playing from a USB 11
USB MP3 Player and USB 11
Drives 11
For MP3 Files 11
For Unprotected WMA Files 11

Formatted: TOC 2, Tab stops: Not at 2.66"
Formatted: TOC 2
Formatted: TOC 2
Formatted: TOC 2
Formatted: TOC 2
Formatted: TOC 2, Tab stops: Not at 2.66"
Formatted: TOC 2, Tab stops: Not at 2.66"
Formatted: TOC 2, Tab stops: Not at 2.66"
Formatted: TOC 2
Formatted: TOC 2, Tab stops: Not at 2.66"
Formatted: TOC 2
Formatted: TOC 2, Tab stops: Not at 2.66"
Formatted: TOC 2

Playing an USB Device 11
PREV (Previous):..... 11
NEXT (Next): 11
FF/FR (Fast Forward/Fast Reverse) 11
RDM (Random): 11
RPT (Repeat) 11
Folder Up 11
Folder Down 12
SCAN 12
Error Messages..... 12
Front Auxiliary..... 12
Rear Auxiliary..... 12
Bluetooth (If Equipped) 12
Enabling/Disabling Bluetooth..... 12
Pairing a Bluetooth Device 12
Connecting a Device 13
Disconnecting a Device 13
Deleting one or all Devices..... 13
Hands Free/ Bluetooth Features.... 13
DIAL MENU 13
DIAL REDIAL 13
QUICK DIAL 13
DIAL CONTACT 14
LAST CALLS..... 14
CALL OPTIONS 14
BT Audio 14
Bluetooth Player..... 14
Radio System Settings 15
Audio Control Menu 15
BASS..... 15
MIDDLE..... 15
TREBLE 15
FADE 15
BALANCE..... 15
AUTO EQ 15
CLOCK..... 15
ALARM 15
User Menu..... 16
Speakers (SPEAKERS) 16
Seek Sensitivity (SEEK SEN) 16
Tune Configuration (TUNE CFG) 16
Playback Configuration (PLBK CFG) 16
Dimming (DIMMING) 16
Category Enable/Disable (CAT E/D) 16
HUE Adjustment (HUE ADJ) 16
Audio Players..... 17
CD Player..... 17
To avoid damage to the CD player: 17
Loading and Ejecting Discs 17
Playing an Audio CD..... 17
SCAN 17
Error Messages..... 17
MP3..... 18
Playing an MP3 CD 18
For MP3 Files 18
For Unprotected WMA Files 18
Music Navigation CD MP3 and USB 18
OPTIONAL EQUIPMENT 18
Infrared Remote Control 18
Fuse 19
Tips and Troubleshooting Chart ... 19
Radio 19

Formatted: TOC 2, Tab stops: Not at 2.66"
Formatted: TOC 2
Formatted: TOC 2, Tab stops: Not at 2.66"
Formatted: TOC 2, Tab stops: Not at 2.66"
Formatted: TOC 2
Formatted: TOC 2, Tab stops: Not at 2.66"
Formatted: TOC 2
Formatted: TOC 2, Tab stops: Not at 2.66"
Formatted: TOC 2, Tab stops: Not at 2.66"
Formatted: TOC 2
Formatted: TOC 2
Formatted: TOC 2, Tab stops: Not at 2.66"

~~Unable to tune stations..... 19~~
~~CD..... 19~~
~~CD player not functioning ..... 19~~
~~CD Insertion is not possible..... 19~~
~~iPod..... 19~~
~~iPod does not play or there is no sound..... 19~~
~~iPod not functioning..... 19~~
~~Bluetooth..... 19~~
~~My radio doesn't recognize my Bluetooth enabled device..... 19~~
~~The device and my radio can't communicate..... 19~~
~~Device music cannot be heard ..... 19~~
~~Rear Seat Audio (RSA)..... 20~~
~~The RSA shows no link. ..... 20~~
~~Trademarks and License Agreements ..... 20~~
~~Precautions..... 20~~
~~Product Cleaning..... 20~~
~~Moisture Condensation ..... 20~~
~~Damage Disc..... 20~~
~~Bluetooth Distraction..... 20~~
~~Conformity assessment issues..... 20~~
~~FCC/IC Regulatory Notice ..... 20~~
~~Modification statement ..... 20~~
~~Interference statement..... 20~~
~~Radiation Exposure Statement..... 21~~
~~FCC Class B digital device notice 21~~
~~CAN ICES-3 (B) / NMB-3 (B)..... 21~~
~~1999/5/EC Directive regulatory notices ..... 21~~

Formatted: TOC 2, Tab stops: Not at 2.66"

Formatted: TOC 2

Formatted: TOC 2, Tab stops: Not at 2.66"

Formatted: TOC 2, Tab stops: Not at 2.66"

Formatted: TOC 2, Tab stops: Not at 2.66"

Commented [YC2]: "Radio pinout is shown below" has different font/size

Commented [GL3]:

Formatted: TOC 2, Tab stops: Not at 2.66"

Formatted: Left

Formatted: TOC 2, Tab stops: Not at 2.66"

Formatted: TOC 2

Formatted: TOC 2, Tab stops: Not at 2.66"

DEA7XX Radios System

Introduction

The information within~~in~~ this manual describes all the features that may or may not be on your specific ~~vehicle~~ radio either because they are options that you did not purchase
or due to changes subsequent to the printing of this owner manual.

Commented [FA4]: Correct spacing

Formatted: English (United States)

Formatted: English (United States)

Formatted: English (United States)

~~Overview~~

~~The Radio system is controlled by using the buttons, RSA or steering wheel controls.~~

~~Radio Pin out~~

~~Radio pinout is shown below~~

REGULAR PANA PINOUT			
Cavity	Pin #	Function	I/O
A1	1	CAN-High	I/O
A2	2	CAN-Low	I/O
A3	3	Park Lights	I
A4	4	Ignition	I
A5	5	PWR_ANT/PA_MIC_PWR	O
A6	6	Dim PWM/ANALOG	I
A7	7	Battery	I
A8	8	Power Ground	-
B1	9	RR+ (Speaker)	O
B2	10	RR- (Speaker)	O
B3	11	RF+ (Speaker)	O
B4	12	RF- (Speaker)	O
B5	13	LF+ (Speaker)	O
B6	14	LF- (Speaker)	O
B7	15	LR+ (Speaker)	O
B8	16	LR- (Speaker)	O
C1	17	Spare for future use	-
C2	18	Amp Sense	I
C3	19	Spare for future use	-
C4	20	Cell_Tel_Mute	I
C5	21	ASWC (Analog Steering Wheel Control)	I
10	22	Power Ground	-
C7	23	L_AUX_IN 2	I
C8	24	AUX_SHIELD_GND	I
C9	25	AUX 2_COM	I
C10	26	R_AUX_IN 2	I
C11	27	AUX 2_ON_OFF	I
C12	28	Spare for future use	-
C13	29	Spare for future use	-
C14	30	Spare for future use	-
C15	31	MIC + (BT)	I
C16	32	MIC – (BT)	I
C17	33	Spare for future use	-
C18	34	Audio (+) PA MIC	I
C19	35	MIC_ON Active Low Input (PA+ Input)	I
C20	36	GND (PA- Input)	I

Overview

The Radio system is controlled by using the buttons, RSA or steering wheel controls.

Formatted: Normal, Left

Commented [YC5]: Correct to SRC/PWR/ESC

Formatted: Normal, Left

Commented [REE6]: Cuadno termine, hacer copia y poner el otro pin out

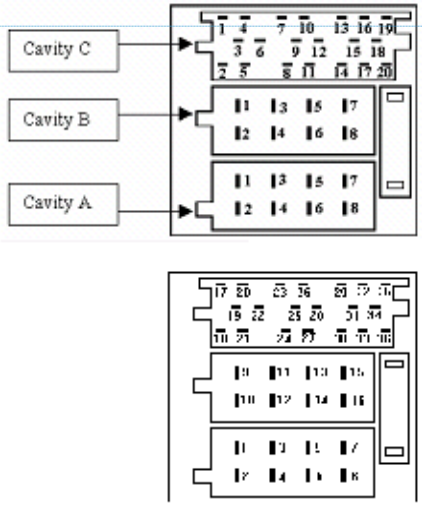

Radio Pinout

Radio pinout is shown below

REGULAR PANA PINOUT			
Cavity	Pin #	Function	I/O
A1	1	CAN-High	I/O
A2	2	CAN-Low	I/O
A3	3	Park Lights	I
A4	4	Ignition	I
A5	5	PWR_ANT/PA_MIC_PWR	O
A6	6	Dim PWM/ANALOG	I
A7	7	Battery	I
A8	8	Power Ground	-
B1	9	RR+ (Speaker)	O
B2	10	RR- (Speaker)	O
B3	11	RF+ (Speaker)	O
B4	12	RF- (Speaker)	O
B5	13	LF+ (Speaker)	O
B6	14	LF- (Speaker)	O
B7	15	LR+ (Speaker)	O
B8	16	LR- (Speaker)	O
C1	17	Spare for future use	-
C2	18	Amp Sense	I
C3	19	Spare for future use	-
C4	20	Cell_Tel_Mute	I
C5	21	ASWC (Analog Steering Wheel Control)	I
10	22	Power Ground	-
C7	23	L_AUX_IN 2	I
C8	24	AUX_SHIELD_GND	I
C9	25	AUX 2_COM	I
C10	26	R_AUX_IN 2	I
C11	27	AUX 2_ON_OFF	I
C12	28	Spare for future use	-
C13	29	Spare for future use	-
C14	30	Spare for future use	-
C15	31	MIC + (BT)	I
C16	32	MIC – (BT)	I
C17	33	Spare for future use	-
C18	34	Audio (+) PA MIC	I
C19	35	MIC_ON Active Low Input (PA+ Input)	I
C20	36	GND (PA- Input)	I

Formatted: No underline

Commented [REE7]: Cuadno termine, hacer copia y poner el otro pin out

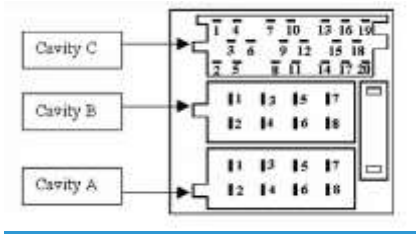

Radio Button Operation

SRC/PWR

Press to switch to FM -> AM -> WX/~~->~~LW -> SXM/DAB~~-> CD~~ -> USB/iPod -> Front AUX -> Rear AUX-> Bluetooth Audio (if equipped) and to turn Radio ON. Press and hold to turn radio OFF.

One-Hour Timer

With the ignition off, pressing the SRC/PWR button will turn on the receiver and activate the receiver's one-hour timer. The receiver will turn off after one hour or by pressing and hold the SRC/PWR button.

Formatted: Not All caps

Formatted: Heading 2

VOLUME KNOB/OK

Press for less than 3 seconds to ~~display~~ mute

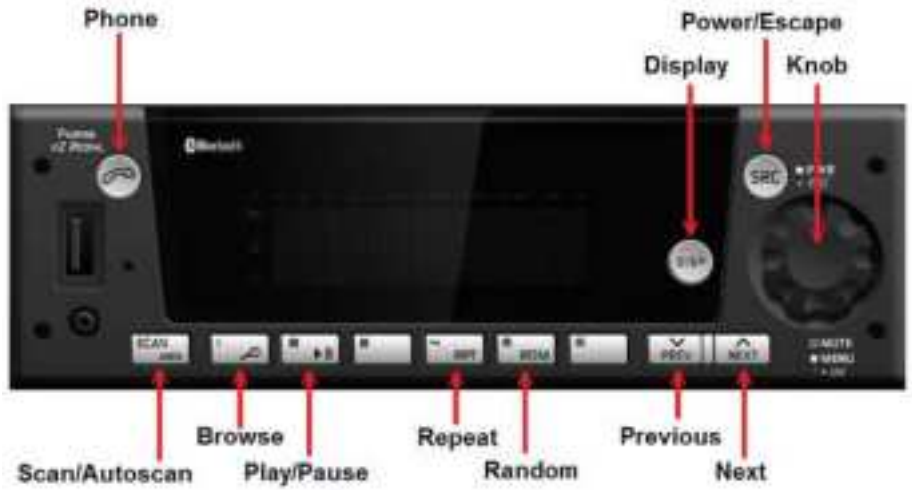

a~~A~~udio ~~Control Menu~~.

Press for more than 3 seconds to Show the User Menu. Rotate to Increase/decrease ~~Volume or during a Menu for Navigation.~~Press while in a Menu to confirm the selected action.

PREV (Previous/Reverse):

Press to select previous track or station.
Press and hold for FR or Tune Down

NEXT (Next/Forward):

Press to select next track or station.
Press and hold for FF or Tune Up

~~EJECT~~

~~Press to eject the CD~~

PHONE (If equipped)

Press the Phone button ~~for more than 3 seconds~~ to show the Bluetooth Menu.
When ~~Bluetooth~~ BT is enabled and device connected, long press the button to display the Dial Menu or short press to accept an Incoming Call ~~(if a Phone is paired)~~.
~~During a call press the button for more than 3 seconds to transfer the call from the radio to the Phone.~~

~~CLOCK/ALARM~~

~~Press during Alarm activation to cancel the Alarm.~~

SCAN/ASCAN

Scans station~~s~~/~~CD tracks~~/MP3/WMA files and folders and in tuner, stores strongest stations to presets.

PLAY/PAUSE:

Press to pause / unpause current Media.

RPT (Repeat):

Press to repeat current track. Press again to stop repeat. Look for the RPT icon in the radio display to turn this feature ON or OFF.

BROWSE

Press to Navigate on the device and select a specific song or play context(Applicable to USB sticks ~~, CD MP3 discs~~ and iPods)

RDM (Random)

Press to play the tracks randomly. Press again to stop random mode. Look for the RDM icon to turn on in the radio display.

~~ESC~~ ESC/SCR (ESCAPE)

Press to exit one Menu Level.
While on Bluetooth (if equipped): Press to reject or cancel a Call.

DISP (DISPLAY)

If vehicle Ignition is ON:
Press to Change Source Display Views.
~~Press for more than 3 seconds to show the Clock for a short time.~~
If vehicle Ignition is OFF:
Press to turn on the Radio and show the clock for a few seconds.

Commented [GL11]: Spacing between "station/MP3"

Commented [YC8]: Correct spelling

Commented [REE9]: No lo encontre en el PDD

Commented [REE12]: Button doesn't work

Commented [REE10]: En el PDD hay algunas imagines con este boton

Radio

Audio Source

To access AM, FM, WX/LW ,SXM/DAB (if equipped), iPod, USB, Rear Aux, Front Aux , CD or BT Audio do one of the following:

——Press the SRC radio button to scroll through the options and select the desired one.

❖

❖ Press the SRC button and then scroll the source menu by knob rotation or NEXT/PREV short presses and then select by short pressing the knob.

CD/MP3, USB/iPod, Front AUX and BT Audio shall be accessed only if the radio model supports them and a device is connected/inserted for that specific source.

Please note, if a device is connected through different sources at the same time, the functionality feature functionality cannot cannot be guaranteed to work at its best performance (Device Dependent). Example: E.g. Device connected through Front Aux and Bluetooth or USB and Bluetooth at the same time.

AM-FM-WX/LW Radio

Playing the Radio

Tuning

Select the desired "Tuner Configuration" by following the steps in the Menu section (page 15).

If is set to MANUAL, the radio will:

- ❖ Execute Manual Tuning when the NEXT or PREV buttons are short pressed.
- ❖ Execute Seek when the NEXT or PREV buttons are long pressed.

If is set to AUTO, the radio will:

- ❖ Execute Seek when the NEXT or PREV buttons are short pressed.
- ❖ Execute Manual Tuning when the NEXT or PREV buttons are long pressed.

Manual Tuning

The current frequency will be increased / or decreased by 1 step of 0.2MHz (USA FM mode), 10 kHz (USA AM mode) and one channel (25 kHz) in WX mode.

Seeking a Station

When the Seek function is activated the radio increments/decrements the frequency until a tunable station is found.

If a tunable station is not found the radio will display "NO STATION FOUND"

Presets

Storing Radio Station Presets

Tune the desire frequency, and then long press any of the *Preset(1-6)* buttons until the radio produces a beep.

Tuning Radio Station Presets

Short press any of the *Preset(1-6)* buttons. The frequency stored at the preset location is tuned when the button is released.

SCAN

To initiate the Scan function, short press the SCAN/ASCN button. When SCAN is initiated, the radio seeks up in frequency and stops on the next strong frequency for 8 seconds before continuing to seek for the next strong station.

If no station is found in two passes through the band, the radio will display "NO STATION FOUND" and then tune returns to its startinginitial frequency.

AUTOSCAN

This function temporally stores the strongest 6 stations of the current band in the presets until the radio is powered off or the source is changed.

AUTOSCAN does not store the frequencies on the presets on numerical order; they are stored based on the order in which they were found and on the quality of the frequency.

To initiate the AUTOSCAN function, long press the SCN/ASCN button until the radio performs a beep; then the "AUTO SCAN" icon will blink while the radio is storing the temporary presets.

When the store process finishes the radio will tune to the station stored in Preset 1 and the "AUTO SCAN" icon shall be illuminated while the mode is active.

Commented [YC17]: Delete the "is"

Commented [FA13]: Need space

Formatted: Indent: Left: 0.25", No bullets or numbering

Formatted: List Paragraph, Indent: Left: 0.25"

Commented [FA18]: Correct spacing

Commented [GL20]: Restructure sentence

Formatted: Pattern: Clear (Light Green)

Commented [FA14]: Correct spacing

Commented [YC19]: Need space

Commented [YC15]: desired

Commented [YC16]: Delete the "is"

To tune any of the 6 frequencies or to store new presets follow the steps defined in the section.

To exit this mode and return to the original presets execute any of the following actions:

- Press and hold the SCAN/ASCAN button.
- Press the SRC/PWR button.
- Turn off the radio.
- Make an ignition cycle.
- Disconnect the battery.

WX

The WX band is for the Governmental weather radio services frequencies; the radio can tune the 7 weather channels following the steps in Tuning, Presets and SCAN sections.

LW

The Long Wave radio is mostly used in Europe. You can navigate ~~since~~from 153 KHz to 279 KHz of frecuency. The steps between nexts or previous channels is of 9 KHz.

To navigate in LW follow the steps in Tuning, Presets and SCAN sections.

SXM (If Equipped)

Vehicles with a valid SiriusXM® satellite radio subscription can receive SiriusXM programming.

SiriusXM satellite radio has a wide variety of programming and commercial-free music, coast to coast, and in digital-quality sound.

SXM Display

When SiriusXM is active, the channel number, channel name, artist name/content info, song title or category name could be displayed on the screen. SiriusXM may update the information at any time.

To change the current display view, short press the DISP button.

When a new channel is selected, a song change occurs, SXM source is selected(from power up or source change) or the information is updated, all the elements will be displayed using paging; the paging can be stopped by short pressing the DISP button.

~~Display labels:~~

~~To easily recognize the displayed text the radio uses the following convention:~~

~~Channel Number: CH~~
~~Channel Name: CH~~
~~Artist Name: ART~~
~~Content Info: INFO~~
~~Song Title: SONG~~
~~Category name: CAT~~

SXM Categories selection

SiriusXM stations are organized in categories.

The category list for SXM is in the following webpage:

http://www.siriusxm.com/sxm/pdf/sirius/channelguide.pdf

To change the current category long press the NEXT/PREV button and the radio will tune the first channel on next or previous category.

Category mode Enable/Disabled

Category Search Mode Enabled means that only channels in the current Category are searched. When enabled, the CATEGORY icon is turned on.

Category Search Mode Disabled means that all channels are searched. When disabled, the CATEGORY icon is turned off.

To enable/disable the category browse mode follow the steps in the ~~User Menu~~User Menu section

The default value after a power up is: Category Disabled.

SXM Channel Selection

Presets and SCAN functions work the same as defined in the ~~SCAN~~SCAN subsection of AM-FM-WX/LX Radio.

NEXT button

While in SXM the radio will scroll to the next channel available in numerical order.

PREV button

While in SXM the radio will scroll to the previous channel available in numerical order.

Commented [REE26]: Cambiar format de letra a subtitulos

Formatted: Default Paragraph Font, Font: (Default) Times New Roman, 12 pt

Formatted: Default Paragraph Font, Font: (Default) Times New Roman, 12 pt

Formatted: Default Paragraph Font, Font: (Default) Times New Roman, 12 pt

Formatted: Heading 2, Left

Commented [FA27]: Correct spacing

Commented [FA21]: Bad wording

Commented [REE22]: Preguntar si esta bien?

Formatted: Font: (Default) Arial, 9 pt

Formatted: Default Paragraph Font, Font: (Default) Times New Roman, 12 pt

Formatted: Default Paragraph Font, Font: (Default) Times New Roman, 12 pt

Formatted: Normal, Left

Formatted: Font: 13 pt, Font color: Accent 1

Commented [FA23]: Need space

Commented [FA24]: Need space

Commented [FA25]: Need space

Formatted: Not Highlight

If the SXM service is not activated, only the free-to-air channels will be present.

Storing Station Presets

Tune the desire station, and then long press any of the *Preset(1-6)* buttons until the radio produces a beep.

For ~~tune~~tuning the ~~stations~~stored stations ~~stored~~, short press any of the *Preset(1-6)* buttons.

SXM Radio ID:

If tuned to channel 0, "RADIO ID" label alternates with the SXM radio eight-digit code. This code is needed to activate the service.

DISP button does not work in channel 0. Channel 0 is not available in category mode enabled.

SXM Messages

SXM BUSY

The audio system is acquiring and/or processing audio and/or text data. No action is needed.

~~*ART UNAVAIL*~~

~~There is not Artist Name related with the current song.~~

~~*SONG UNAVAIL*~~

~~There is not Song Title related with the current song.~~

~~*CHAN UNAVAIL*~~

~~There is no Channel Name related with the current channel.~~

CHECK ANTENNA

SXM antenna or antenna cable is not connected to the radio or the antenna is shorted.

NO SIGNAL

SXM tuner module reports the No Signal condition. Under this condition only Channel 0 will work as stated in this manual.

CHAN UNSUBSCRIBED ~~UNSUB~~

Active channel has become unsubscribed or the requested channel is not unsubscribed.

SUBSCRIPTION ~~UPDATED - PRESS OK TO CONTINUE~~UPDATED

The subscription of the radio was updated. Message will timeout after 5 seconds.

~~The subscription of the radio was updated. To remove the message and return to the previous state press "OK" (Knob).~~

CH UNAVAILABLE

Requested channel is reported unavailable for a newly selected channel or the currently selected channel.

Unavailable channels are those that are in the legal channel range but are not currently available for display or subscription as a broadcast service.

After 5 seconds the channel 1 will be tuned~~After 3 seconds the previous channel (if available) or channel 1 will be tuned~~.

TUNE START

When the user tunes to a Preset and the currently broadcast track has not previously been heard by the user, the radio will automatically play that track from start from within the Instant Replay buffer.
To enable/disable the Tune Start mode follow the steps in the User Menu section.

INSTANT REPLAY

If tune to a Preset the Radio will automatically provide access to that channel's buffered content through Instant Replay functions, so this content is available for navigation by the user.
To enable/disable the Instant Replay mode long press the DISP button while SXM source is active.

While Instant Replay is enable, it activates the second function of Preset keys.

Skip Backward – P1 short press
Rewind – P1 press and hold
Play/Pause – P2 short press toggle
Skip Forward – P3 short press
Fast Forward – P3 press and hold
Go Live – P4 Short press

TUNE SCAN

As the Radio performs the Tune Scan, it automatically plays excerpts from the starts of buffered songs and updates metadata (e.g. artist/title) as each song excerpt is played. While the Tune Scan is executing, radio reacts to two navigation controls if invoked, Skip Backward and Skip Forward.

To enable/disable the Tune Scan mode long press the SCAN button while SXM source is active.

Commented [GL28]: Restructure sentence

Formatted: Pattern: Clear

Commented [GL32]: "press"

Formatted: Font: 13 pt, Not Italic

Formatted: Font: 13 pt, Not Italic

Commented [FA29]: Need space

Commented [GL30]: "no"

Commented [YC31]: Change to no

DAB (If Equipped)

When DAB is active, the Station Name, and category name ~~could~~will be displayed on the screen.

Traffic Announcement (TA)

The radio makes a~~n~~n alert ~~of traffic at the moment and it allow you to hear the new~~to notify there is an available TA. ~~i~~To hear it, ~~ust~~press the Knob in the option LISTEN when the alert is active. To close the Announcement press ESC button or select the CANCEL option scrolling the Knob and pressing it.

You can enable this function in the user menu.

DAB Announcement

When a DAB announcement event occurs (and the user is not in a phone call): the radio automatically tune the necessary station and a full screem Pop-up is shown.
Pressing ESC shall close the popup, return to last screen and clear the announcement.

DAB Announcement Category

~~As the~~With DAB Announcements, you can recive alerts of differents categorie~~s~~, you can select which category you want to recive the announcement in the User Menu.

Alternate Frequency (AF) / Service Following (DAB-FM link)

While ON, if the current station loses signal the system shall attempt to find a station in DAB currently in simulcast, the display shall not change from the current station, only the new audio shall come through and ~~the~~ will be updated if necessary.

Regional

This functionality allows the user to lock down the set to their current regional or let the radio tune into other region-specific programming as they move into other region.

Refresh List

This method allows to user update all the DAB Lists by himself.

In the User Menu you can select the option "Refresh List"

During the updating list procedure, Radio will inform the user regarding the ongoing operation~~radio inform to the user the ongoing operation~~.

To cancel the ~~Updating~~update, press the ESC button.

Emergency Alert

When an emergency announcement event occurs (and the user is not in a phone call): the radio automatically tune~~s~~ the ~~e~~mergency station.

Once the Emergency announcement is complete the pop-up is removed from the screen, or you can press the button ESC to close the Pop-up.

NEXT button

While in DAB the radio will scroll to the next station within the current station list.

PREV button

While in DAB the radio will scroll to the previous station within the current station list.

Storing Station Presets

Tune the desire station, and then long press any of the *Preset(1-6)* buttons until the radio produces a beep.

For ~~tune~~selecting a stored ~~the~~ stations, ~~stored~~ short press any of the *Preset (1-6)* buttons.

DAB Messages

Station Not Available

If signal is lost while on a station, the station name shall remain on the screen and 'Station Not Available' advisory shall be displayed below it.

No Signal

DAB tuner module reports on the display the "No Signal condition".

Station Currently Unavailable

If the station is currently not available, radio will display 'Station Currently Unavailable'.

No info

When Radio Text is not avaible, radio will display "NO INFO".

Commented [GL37]: remove
Formatted ...
Formatted ...
Formatted ...
Commented [GL38]: region
Formatted ...
Formatted ...
Formatted ...
Formatted ...
Formatted ...
Commented [FA33]: Statement not clear
Commented [YC39]: Correct spelling. This method allows th ...
Formatted ...
Commented [GL43]: Restructure sentence
Commented [YC40]: Radio will inform the user regarding th ...
Formatted ...
Formatted ...
Commented [GL34]: spelling
Formatted ...
Commented [GL41]: update
Formatted ...
Formatted ...
Formatted ...
Commented [YC35]: Correct spelling. Categories
Formatted ...
Commented [YC36]: Correct spelling. Which
Formatted ...
Commented [FA44]: Correct spacing
Formatted ...
Commented [YC42]: Automatically tunes to the
Formatted ...
Formatted ...
Formatted ...
Formatted ...

iPod (if equipped)

This Radio supports the following iPod models:

- iPod classic® (6th generation)
- iPod nano® (6G)
- iPod touch® (4G)
- iPhone® (3G, 3GS, 4, and 4Sfrom 4S to X)

Other iPods may be played, but functionality is not guaranteed.

For some Models, Rradio provides up to 2.1 Amps of charge, so any device connected to the USB that requires less than 1this. A will be charged. Standard capacity is 1 Amp

There may be problems with the operation and function in the following situations:

- When connecting an iPod on which a more recent version of the firmware is installed than is supported by the Radio.
- When connecting an iPod with firmware from other providers is installed.

Playing from an iPod

To connect an iPod:

1. Connect one end of the standard iPod USB cable to the iPod's dock connector.
2. Connect the other end to the USB port in the front radio display.
3. Radio will start playing the USB and shows the track number, Song, Artist, elapsed time, and Album information when available.
4. iPod music information displays on the radio's display and begins playing through the vehicle's audio system.
5. If the iPod is an unsupported model, it can still be listened to in the vehicle by connecting to the auxiliary input jack using a standard 3.5mm (1/8 in) stereo cable

Expected behavior when iPod is connected:

- The iPod battery recharges automatically while the vehicle is on.
- The iPod shuts off and stops charging when the vehicle is shut off.

iPod Menu

Press the magnifying glass (preset 1) button while USB source (iPod connected) is active to access the iPod Menu.

Use the Volume Knob or Next/Prev button to navigate through the different options.

Use the iPod Menu to select:

Playlists:

1. Press to view the playlists on the iPod.
2. Select a playlist name to view a list of all songs in the playlist.
3. Select the song from the list to begin playback.

Artists:

1. Press to view the artists on the iPod.
2. Select an artist name to view a list of all albums with songs by the artist.
3. Select an album.
4. Select the song from the list to begin playback.

Albums:

1. Press to view the albums on the iPod.
2. Select an album name to view a list of all songs on the album or select All Songs to view all songs on the iPod.
3. Select the song from the list to begin playback.

Genres:

1. Press to view the genres on the iPod.
2. Select a genre name to view a list of artists of that genre.
3. Select an artist to view albums or All Albums to view all albums of that genre.
4. Select Artist to view albums.
5. Select Album to view songs.
6. Select the song from the list to begin playback.

Podcasts:

1. Press to view the podcasts onthe iPod.
2. Select a podcast name to beginplayback.

Songs:

1. Press to view a list of all songs on the iPod.
2. Select the song from the list to begin playback.

Composers:

1. Press to view the composers on the iPod.
2. Select the composer to view a list of songs by that composer.
3. Select a song from the list to begin playback.

Audio Books:

1. Press to view the audio books on the iPod.
2. Select the audio book from the list to begin playback.

When an iPhone or iPod Touch with iOS lower than iOS 5.0 is connected through USB and Bluetooth, the audio may not be heard when the iPod source is selected. To correct this situation select either the dock connector in the phone or disconnect and reconnect the Apple device.

Note: iOS is the Apple Operative System.

Use the following controls to play the iPod:

Commented [YC47]: Need space

Commented [YC48]: Need space

Commented [FA45]: This list of phones is outdated?

Commented [YC49]: Need space

Commented [FA50]: Need space

Commented [FA46]: Should we mention the IPAD 2.1A on some models

Commented [YC51]: Need space

Commented [YC52]: Need space

Formatted: Pattern: Clear (Light Green)

Commented [YC53]: Need space

PREV (Previous):

Press to seek to the beginning of the current or previous track.
If the track has been playing for less than ten seconds, it seeks to the previous track. If longer than ten seconds, the current track starts from the beginning.

NEXT (Next):

Press to seek to the next track.

FF/FR (Fast Forward/Fast Reverse)

To fast forward or reverse through a track, press and hold Next or PREV button.

RDM (Random):

Press to play the tracks randomly. Press again to stop shuffle mode. Look for the RDM icon to turn on in the radio display.

RPT (Repeat):

Press to repeat current track. Press again to stop repeat. Look for the RPT icon to turn on in the radio display.

Error Messages

If an "UNSUPPORTED" message is displayed, it could be for one of the following reasons:

- When the iPod connected is not supported (look at page ~~7~~ 11 for the list of iPods supported).
- The iPod does not respond to the radio commands, in this case reset the iPod and try again the connection.

If a "NO MUSIC" message is displayed, it could be for one of the following reasons:

- There are not ~~any~~ playable files in the iPod.

USB

Playing from a USB

A USB mass storage device can be connected to the USB port.
The USB port is in the front of the radio display.
Five volts DC power is limited to ~~one~~ 2.1 ~~a~~Amp from this port. ~~Devices such as iPad that require greater current will not charge from this port~~Some models are limited to 1 Amp.

USB MP3 Player and USB

Drives

The USB MP3 players and USB drives connected must comply with the USB Mass Storage specification:

- MS-Dos partition only.
- Class specification (USB MSC) and supports formats of FAT32, FAT16, NTFS, and HFS+.
- Hard disk drives may be played, but they are not supported.
- The radio will not be able to play back write-protected music.
- MTP players are not supported.

The following guidelines must be met when creating MP3 files; otherwise the files might not play:

For MP3 Files

- **Bit rates:** 32, 40, 48, 56, 64, 80, 96, 112, 124, 160, 192, 224, 256, 320 kbps for MPEG-1 Audio Layer 3.
- **Sampling frequencies:** 32, 44.1 and 48 kHz for MPEG-1 Audio Layer 3.
- Maximum number of folders: Eight folders with 255 files per folder.
- ~~Maximum of 1,000 files on a disc.~~
- M3u and pls playlist versions supported.

- ~~Recorded on a CD-R or CD-RW with a maximum capacity of 700 MB.~~

For Unprotected WMA Files

- **Versions:** 1, 2, 7, 8, 9 and 9.1.
- **Bit rates:** 32 - 320 kbps.
- **Sampling frequencies:** 32 - 48 kHz.

Playing an USB Device

1. Connect the USB and it begins to play.
2. Using the SRC Button select the USB source.
3. Radio will start playing the USB and will show the track number, Song, Artist, elapsed time, and Album information when available.
~~3.~~

~~Use the following controls to playthe disc:~~

~~PREV (Previous):~~

~~Press to seek to the beginning of the current or previous track.~~

~~If the track has been playing for less than ten seconds, it seeks to the previous track. If longer than ten seconds, the current track starts from the beginning.~~

~~NEXT (Next):~~

~~Press to seek to the next track.~~

Formatted: Font: 13 pt, No underline, Font color: Accent 1
Formatted: Indent: Left: 0.25", No bullets or numbering
Commented [FA57]: On some models this is not true
Commented [YC54]: Correct spacing
Formatted: Font: 11.5 pt
Commented [YC58]: Correct spacing
Formatted: Font: 13 pt
Formatted: Space Before: 12 pt
Commented [REE60]: ?????
Commented [REE60]: ?????
Commented [YC55]: Page 11
Commented [GL56]: There are no playable files in the iPod.
Commented [REE59]: Donde puedo encontrar esta info?

FF/FR (Fast Forward/Fast

To fast forward or reverse through a track, press and hold Next or PREV button.

RDM (Random):

Press to play the tracks randomly. Press again to stop shuffle mode. Look for the RDM icon to turn on in the radio display.

RPT (Repeat)

Press to repeat current track. Press again to stop repeat. Look for the RPT icon to turn on in the radio display.

Folder Up

Press to select next Folder.

If playing a specific playable scope, when pressed the radio will jump and starts playing track 1 as newly inserted USB.

Folder Down

Press to select previous Folder, if playing a specific playable scope, when pressed will jump and starts playing track 1 as newly inserted USB

SCAN

Short press to start the SCAN of the current playing context.

Long press to SCAN the whole device starting on track1.

Error Messages

If an "UNSUPPORTED" message is displayed, it could be for one of the following reasons:

- When a MTP Player or a USB device with unsupported format or partition is connected.
- When the device is damaged.
- When the connected device was not connected as mass storage device.

If "NO MUSIC" message is displayed, it could be because there are not MP3 or unprotected WMA files that can be played.

Front Auxiliary

In front auxiliary mode, you can play an external device such as an iPod® or MP3 player via the auxiliary input jack on the front of the receiver.

To use an external device simply connect the device via the auxiliary input jack.

Front auxiliary mode will not be available if no device is connected to the auxiliary input jack on the front of the receiver.

Rear Auxiliary

In rear auxiliary mode, you can play an external device that you have connected via the receiver's rear power auxiliary input lines.

To use an external device simply connect the device via the auxiliary input jack and select it using the source button.

Rear Aux source will be available even when no device is attached to the rear input.

Bluetooth (If Equipped)

The radio can connect to a Bluetooth Device. To use this functionality your device requires Bluetooth and to be paired and connected to the radio.

The supported device list is located in the following web page:
http://www.panapacific.com/support

Other devices may be connected and played but functionality cannot be guaranteed.
You can connect up to 10 devices to the radio; the radio will connect to the first available paired device, starting from the last paired/connected device.

The Bluetooth Menu is available when the Phone button is pressed for more than 3 seconds. To navigate through it, rotate the knob.

The Bluetooth Menu consists of the following options: BT ENABLE, CONNECT PHONE, DISCONNECT PH, ADD PHONE, E and DELETE PHONE and BT PROFILES (some options are only available when a device has been paired previously)

Enabling/Disabling Bluetooth

To Enable/Disable Bluetooth in your Radio (if it is not already activated):

- Press the Phone button for more than 3 seconds while the Radio is ON. The Bluetooth Menu will be shown.
- Rotate the Volume Knob until the display shows: "BT Disable" or "BT Enable".

Commented [FA61]: This is just a link to PANA support. Why can't we add the list to the manual?

Formatted: Font: (Default) Arial

Formatted: Font: (Default) Arial

- Press the Volume Knob to Enable or Disable the Bluetooth.

When devices were previously paired the Phone Icon will be active and the arrow icons will blink until the reconnection of the previously paired phones is attempted (each phone reconnection will be attempted three times).

Pairing a Bluetooth Device

To complete pairing the following steps must be followed:

Enable Bluetooth on the radio and on Refer to your device's Manual for more information.

1. Pair the dDevice to the Radio:

2.

- Press the Phone button, for more than be shown.
Rotate the Volume Knob until the display shows: ADD PHONE.
-
- Press the Volume Knob to confirm the The radio will display ADDING PH for 3 seconds. In this discoverable mode, the Bluetooth status icon will blink for up to 3 minutes. If no phone was found, the radio will display NO PH FOUND and the Phone and arrows icon will be disabled.
-
- During the discoverable mode set your cell phone to add a Bluetooth device and look for the name "DelphEAi5700 Radio."

Follow the instructions on your phone to connection.When necessary, use the 4-number PIN 0000 to connect to the radio.

-
- When the cell phone has been added, the radio will display PH CONNECTED and then the Bluetooth device name. The Phone Icon will be active on the display, arrows will be disabled.
- When the radio connects, the Bluetooth blink. The blinking icon signifies that the receiver is attempting to download the cell phone's CONTACTS (for the DIAL CONTACTS function). The icon will cease to blink if all contacts have been downloaded or if the radio times out from receiving contacts from the cell phone device. See your phone's user guide for more information. See Notes 1, 2 and 4.

Connecting a Device

If your device was previously paired, you can simply connect to the device:

1. Press the Phone button for more than 3 be shown.
2. Rotate the Volume Knob until the display shows CONNECT PH.
3. Press the knob to confirm the action. Select the desired Device (rotate the knob and confirm by pressing the knob). The radio will show CONNECTING for 3 seconds.
4. When the radio connects, the radio will PH CONNECTED and the Device Friendly Name, the Bluetooth icon will blink. The blinking icon signifies that the receiver is attempting to download the cell phone's CONTACTS (for the DIAL CONTACTS function). The icon will cease to blink if all contacts have been downloaded or if the radio times out from receiving contacts from the cell phone device. Phone Icon will be active on the display.

Disconnecting a Device

If your device is currently connected and you required disconnecting it from the radio, follow the next actions:

1. Press the Phone button for more than 3 seconds. The Bluetooth Menu will be shown.
2. Rotate the Volume Knob until the display shows DISCONNECT PH.
3. Press the knob to confirm the action. The radio will show DISCONNECT PH for a short time. Once the Phone is disconnected the radio will display DISCONNECTED and then the Bluetooth device name. The Phone Icon will be inactive.

Deleting one or all Devices

To delete from the radio one or all devices previously paired:

1. Press the Phone button for more than 3 seconds. The Bluetooth Menu will be shown
2. Rotate the Volume Knob until the display shows DELETE PH.
3. Press the knob to enter the submenu.
4. The radio will show a device list through it by rotating the knob). Select the device to be deleted or select DELETE ALL to erase all the paired devices in the list by pressing the Volume Knob. The radio will show PH DELETED.

Hands Free/ Bluetooth Features

Once your device is properly paired (see Paring a Bluetooth Device) and connected (see Connecting a Device), the radio supports the following Hands Free features if the connected device has that capability.

DIAL MENU

The radio can retrieve the last calls and contact information from the device (Hands Free profile must be available in the device and in some cases the action must be accepted by the user)

The dial menu is accessed when the device is not in a call and the Phone button is long pressed.

Formatted: Font: (Default) Arial, 9 pt

Formatted: Font: (Default) Arial, 9 pt

Formatted: Normal, No bullets or numbering

Formatted: Font: (Default) Arial, 9 pt

Formatted: Normal, No bullets or numbering

Commented [FA62]: Need a space

Formatted: Font: (Default) Arial, 9 pt

Formatted: Font: (Default) Arial, 9 pt

Formatted: Normal, No bullets or numbering

DIAL REDIAL

The user can retrieve the last phone number called and place a call. Press the Phone button and the last phone number called will be dialed.

~~QUICK DIAL~~FAVORITES

The radio is capable of storing 6 phone numbers ~~in any of the available preset buttons.~~

To save a phone number, you can select the contact using either the DIAL CONTACTS feature or the LAST CALLS feature. When the desired contact phone number is displayed, press ~~and hold any of the PRESET~~the KNOB button~~s until you hear a beep confirming~~and select the option ADD TO FAV, then ~~the~~ the phone number has been saved in Favorites list.

To dial a saved phone number in Favorite List, select ~~QUICK DIAL~~FAVORITES from the menu and rotate the knob to select the ~~appropriate PRESET~~ number. Press the knob and select DIAL to place the call to the saved phone number.

To ~~change deleate presets~~ numbers simply repeat the last process with the desired phone number and select DEL FAV.~~ Presets are overwritten.~~

DIAL CONTACT

The radio is able to read and display cell phone contacts. Press the Phone button to show the DIAL MENU and rotate the knob until DIAL CONTACTS is shown, press the knob to select this feature. Rotate the knob to select between the different stored contacts (up to 500 numberfrom the phone and 250 contacts from the SIM). Press the OK button if you want to dial to the listed contact.

The radio will download the following phone numbers from each contact (if available): HOME, WORK, MOBILE, OTHER and PREFERRED. Within the menu they will be displayed as either: H, W, M, O or P plus the 10 digit number (XXXXXXXXXX).

When the transfer is successful, the radio will show the DIAL CONTACTS submenu. Each time the radio connects to your phone, the DIAL CONTACTS submenu is updated, so you may need to repeat this manual operation as needed.

LAST CALLS

The radio is capable of listing the last 10 calls (DIALED, RECEIVED AND MISSED). Rotating the knob will navigate the user through the selected call list. Press the OK button to place the call. See Note 1.

CALL OPTIONS

The following options are available during a Hands Free call.

Accepting a Call

When an incoming call is received, the radio will play the in bang ringtone if the device supports this feature, otherwise a default ringtone will be played, the user can adjust the Volume of the ringtone, while the ringtone is played. Any volume lower than 13, will not be considered for the next incoming call. Volume above 13 will be stored for the next call.
When an incoming call is received, the radio will display the name (if available) and number of the caller. To accept the call, press any of the following radio buttons: Phone, Knob or NEXT.

Rejecting a Call

When an incoming call is received, the radio will display the name (if available) and number of the caller. To reject the call, you can press any of the following radio buttons: ESC or PREV.

Ending a Call

When a Hands Free call is in progress, the radio will display the caller's number and the elapsed time. To end a call, press any of the following radio buttons: Phone, ESC or PREV.

Microphone Mute

When a Hands Free call is in progress, pressing Pause/Play will mute the radio's microphone. Press again to deactivate mute.

Call Transfer

If a call is in progress, press the radio Phone button for more than 3 seconds to transfer the call to the cell phone for private conversations. Repeat this process if you want to return into Hands Free mode again. See Note 6.

Dual Phone

The radio is able to connect two devices at the same time, but with only one profile available for each (audio-streaming or phone-calls).

To select both audio and phone profiles onto two devices:

1. Repeat the steps for connecting a Bluetooth device and connect device #1.
2. Repeat the steps for connecting a Bluetooth device and connect device #2.
3. The device #1 was disconnected, so reconnect again.
4. Press the Phone button. The Bluetooth Menu will be shown.
5. Rotate the Volume Knob until the display shows PAIRED PHONE.
6. Press the knob to confirm the action. The radio will show the two devices previously paired/connected.
7. Rotate the Volume Knob to select the device.
8. Press the knob to confirm the action.

Commented [REE66]: Checar si tambien se agrega FAVORITES

Commented [REE67]: Revisar

Formatted: Font: (Default) Arial

Formatted: Pattern: Clear (Background 1)

Commented [REE72]: Funciona?

Commented [REE68]: Checar estos, su ubicacion en el PDD

Commented [REE69]: Son correctos?

Formatted: Font: (Default) Arial

Formatted: Default Paragraph Font, Font: (Default) Arial, 9 pt

Commented [FA70]: Correct spacing

Commented [REE71]: Son correctos?

9. The radio will show the "Bluetooth device name" connected as PAIRED PHONE.
10. Press the Phone button. The Bluetooth Menu will be shown.
11. Rotate the Volume Knob until the display shows PAIRED AUDIO.
12. Press the knob to confirm the action. The radio will show the two devices previously paired/connected.
13. Rotate the Volume Knob to select the device.
14. Press the knob to confirm the action.
15. The radio will show the "Bluetooth device name" connected as PAIRED AUDIO.

BT Audio

Bluetooth Player

If your connected device supports this feature, it can be used as an audio source input to the radio, allowing you to enjoy the music files stored on your phone.
This feature is recommended to be used with the device default player. Functionality cannot be warranted, when a third party player is used in the connected device. The radio can be out of synchrony if the user alters or command the player within the phone.

To access music files on your phone press the SRC button and select BT AUDIO.
In BT AUDIO you can use the following radio buttons: Play, Pause, NEXT, PREV, ~~Fast~~ F/F~~Forward and~~ & F~~ast~~ /R~~everse~~, Repeat and Random, if the device supports them. See Notes 1 and 3.

Play/Pause:

Press to play the current track. Press again to pause the audio. See Note 5.

PREV (Previous):

Press to seek to the beginning of the current or previous track.
If the track has been playing for less than ten seconds, it seeks to the previous track. If longer than ten seconds, the current track starts from the beginning.

NEXT(Next):

Press to seek to the next track.

FF/FR (Fast Forward/Fast Reverse)

To fast forward or reverse through a track, press and hold NEXT or PREV button

RDM (Random):

Press to play the tracks randomly. Press again to stop shuffle mode. RDM Icon will be turn ON or OFF when the feature is enabled or disabled.

RPT (Repeat):

Press to repeat current track. Press again to stop repeat. RPT Icon will be turned ON or OFF when the feature is enabled or disabled.

Note 1: This function will only be shown if the cell phone supports this feature.
Note 2: The contacts shown on the radio display will depend on the information received by the radio from the phone device used.
Note 3: Function may differ depending on the phone.
Note 4: Some cell phones may require enabling this feature through their own applications.
Please consult your cell phone user guide regarding how to enable it.
Note 5: Some phones will make the radio display BT AUDIO PAUSE while audio is available. This is normal on phones that do not have full compatibility with this radio Bluetooth remote control commands.

Note 6: Some devices will disconnect Bluetooth when a transfer is performed.

Radio System Settings

The radio contains ~~two~~ three menus for settings adjustment:

- Audio Control Menu.
- User Menu

These menus are defined in the following sections.

Audio Control Menu

The Audio Control Menu is shown when the Volume knob is pressed for less than 2 seconds and you select the Audio Control Menu in the list.

In this menu the user can adjust the bass, middle, treble, fade, balance and auto EQ. ~~Furthermore, modify the Clock and Alarm Settings.~~

Once in the Audio Control menu, rotate the knob until the desired option is displayed, press the volume knob to select.

BASS

The display will show BASS and its current level from -6 to +6. Rotate the knob clockwise to increase the Bass and counterclockwise to decrease it.

MIDDLE

The display will show MIDDLE and its current level from -6 to +6. Rotate the knob clockwise to

Formatted: Font: (Default) Univers-Light

Commented [YC74]: Only 2 are listed?

Commented [FA73]: Correct spacing

increase the Middle and counterclockwise to decrease it.

TREBLE

The display will show TREBLE and its current level from -6 to +6. Rotate the knob clockwise to increase the Treble and counterclockwise to decrease it.

FADE

The display will show FADE and its current level from ~~-6 to +6~~L15 to R15. Rotate the knob clockwise to move the sound to the front speakers and counterclockwise to move the sound to the rear speakers. Fade is not available in 2-speaker mode.

BALANCE

The display will show BALANCE and its current level from L15 to R15. Rotate the knob clockwise to move the sound to the right speakers and counterclockwise to move it to the left speakers.

AUTO EQ

The display will show the current selected option. Rotate the knob clockwise and counterclockwise to cycle through auto EQ options from 1 to 7.

Options are:
1. Pop
2. Rock
3. Country
4. News
5. Jazz
6. Classical
7. Manual

To select the desired option, press the knob again

~~CLOCK~~

~~To adjust the time in the radio, press the knob button to show the Audio Control Menu. Rotate the knob until the Clock is shown on the display and press the knob to enter the Clock Menu.~~

~~Once in the Clock Menu you can select 12-Hour or 24-Hour format by rotating the knob and pressing it to confirm.~~

~~Finally, after the format configuration and confirmation, adjust the time settings and confirm the changes by pressing the Knob button~~

~~ALARM~~

~~To set the Alarm press, enter the Audio Control Menu, select Alarm and press the knob. Once in the Alarm Menu, change the ALARM ON/OFF by rotating the knob and pressing the knob to confirm the selection. When the user selects ALARM ON, the Alarm Icon will be set to ON and the following configuration options will be shown:~~

~~***TIME:*** The alarm hour digits will begin to flash. The format will be the same as the current clock selection (12- or 24-hour mode). Change the hour by rotating the knob and confirm the hour by pressing the knob. After that the alarm minute digits will begin to blink, change and confirm the selection.~~

~~***SET TONE or SET MUSIC:*** Change between SET TONE or SET MUSIC by rotating the knob and pressing the knob.~~

~~***VOLUME:*** When Tone is selected, the volume can be changed between Low, Mid and High (no sound will be heard while setting up the Tone volume). When Music is selected, adjust the volume from 0 to 30.~~

~~*Turning the Alarm Off*~~

~~When the alarm is triggered, to cancel the alarm, short press the preset 3 button. If you do not turn the alarm off, it will automatically shut off after 63 minutes.~~

~~*Activating Snooze*~~

~~To SNOOZE the alarm, press any button for less than 2 seconds when the alarm sounds, except Preset 3 button. SNOOZE will appear for 3 seconds and the alarm will be postponed for 9 minutes.~~

User Menu

The User Menu is shown when the Volume knob is pressed for more than 2 seconds.

In this menu the user can configured the following options:

- Speakers
- Speed Dependent Volume
- Seek Sensitivity
- Tune Configuration
- ~~Playback configuration~~
- ~~Dimming~~
- Category Enable/Disable
- Regional (If apply)
- Traffic Announcement (TA)(If apply)
- DAB Announcement (If Apply)
- DAB Aannouncement Category (If Apply)
- Alternative Frecuencies (AF) (If apply)
- Refresh List (If apply)
- Clock

Formatted: Font: (Default) Univers-Light

Formatted: Font: (Default) Univers-Light

Formatted: Font: (Default) Arial

Formatted: Font: (Default) Arial

Formatted: Font: (Default) Arial

Formatted: Font: (Default) Arial

- Alarm
- Dimming
- Hue Adjustment.

Not all the options are available in all the modes. See restrictions in the following sections.

Once in the user menu, rotate the knob until the desired option is displayed, press the volume knob to select.

Speakers (SPEAKERS)

The display will show SPEAKERS and the current selected option. This submenu allows you to change the speakers between 2 and 4 Channels. Rotate the knob to change between 2CH or 4CH and press the Knob to select the desired option.

Speed Dependent Volume (SPEED DEP VOL)

Speed Dependent volume control adjusts your audio system's sound output to the current speed of your car.

Seek Sensitivity (SEEK SEN)

The display will show SEEK SENS and the current level from -~~2~~6 to +6~~2~~. Rotate the knob clockwise to increase the Sensitivity value and counterclockwise to decrease it. Press the Knob to select the desired option. This option is only available when radio is playing Tuner Mode.

Tune Configuration (TUNE CFG)

The display will show TUNE and the current selected option Auto or Manual. Rotate the knob to change between AUTO and MANUAL, press the Knob to select the desired option.

~~Playback Configuration (PLBK CFG)~~

~~This menu allows the user to select the NEXT and PREV buttons configuration. The display will show the current selected option SEEK or FAST F/F. Rotate the knob to change between SEEK or FAST F/F, press the Knob to select the desired option. This option is only available when the radio is playing CD, USB or iPod Mode.~~

~~Dimming (DIMMING)~~

~~When the vehicle uses dimming by CAN or Analog configuration, the display will show DIMMING 0. This value can be adjusted from -10 to +10. Otherwise the display will show DIMMING and the current selected level from 0 to 30. Rotate the knob clockwise to increase the Dimming and counterclockwise to decrease it~~

Category Enable/Disable (CAT E/D)

The display will show CAT ENABLE or CAT DISABLE depending on the current selection. Rotate the knob to change between the two options and press the Knob to confirm the selection. This option is only available in SXM Mode.

Regional

The display will show ON or OFF depending on the current selection. Rotate the knob to change between the two options and press the Knob to confirm the selection. This option is only available in DAB Mode.

Traffic Announcement(TA)

The display will show ON or OFF depending on the current selection. Rotate the knob to change between the two options and press the Knob to confirm the selection. If TA is enabled the radio show an icon in the display. This option is only available in radios with DAB function.

DAB Announcement

The display will show ON or OFF depending on the current selection. Rotate the knob to change between the two options and press the Knob to confirm the selection. This option is only available in DAB Mode.

DAB Announcement Categories

The display will show ON or OFF depending on the current selection. Rotate the knob to change between the two options and press the Knob to confirm the selection.When you enable this function you could select which category you want to recive alerts. This option is only available in radios with DAB function.

Alternative Frequencies (AF)

The display will show ON or OFF depending on the current selection. Rotate the knob to change between the two options and press the Knob to confirm the selection. If AF is enabled the radio show an icon in the display. This option is only available in radios with DAB function.

Formatted: Font: (Default) Univers-Light

Formatted: Heading 3

Formatted: Heading 3

Formatted: Heading 3

Formatted: Justified

Commented [REE75]: Revisar

Commented [YC76]: Correct spelling. Which

Formatted: Left

Commented [YC77]: Correct spelling. Frequencies

Formatted: Heading 3, Left

Commented [REE78]: Revisar

Formatted: Heading 3, Left

Refresh List

To activate this function just select it in the User Menu List and press the Knob.

CLOCK

To adjust the time in the radio, press the knob button to show the Audio Control Menu. Rotate the knob until the Clock is shown on the display and press the knob to enter the Clock Menu.

Once in the Clock Menu you can select 12-Hour or 24-Hour format by rotating the knob and pressing it to confirm.

Finally, after the format configuration and confirmation, adjust the time settings and confirm the changes by pressing the Knob button

Dimming (DIMMING)

When the vehicle uses dimming by CAN or Analog configuration, the display will show DIMMING 0. This value can be adjusted from -10 to +10. Otherwise the display will show DIMMING and the current selected level from 0 to 30. Rotate the knob clockwise to increase the Dimming and counterclockwise to decrease it

HUE Adjustment (HUE ADJ)

Depending on the Radio colors available the display will show any of the following options:

AMBER or GREEN

RED or BLUE

Rotate the knob to change between the two options and press the knob to confirm selection. This option is only available in models equipped with Dual Color.

ALARM

To set the Alarm press, enter the Audio Control Menu, select Alarm and press the knob. Once in the Alarm Menu, change the ALARM ON/OFF by rotating the knob and pressing the knob to confirm the selection. When the user selects ALARM ON, the Alarm Icon will be set to ON and the following configuration options will be shown:

SET TIME: The alarm hour digits will begin to flash. The format will be the same as the current clock selection (12- or 24-hour mode). Change the hour by rotating the knob and confirm the hour by pressing the knob. After that the alarm minute digits will begin to blink, change and confirm the selection.

SET TONE or SET MUSIC: Change between SET TONE or SET MUSIC by rotating the knob and pressing the knob.

VOLUME: When Tone is selected, the volume can be changed between Low, Mid and High (no sound will be heard while setting up the Tone volume). When Music is selected, adjust the volume from 0 to 30.

Turning the Alarm Off

When the alarm is triggered, to cancel the alarm, short press the ~~preset 3~~ESC button. If you do not turn the alarm off, it will automatically shut off after 63 minutes.

Activating Snooze

To SNOOZE the alarm, press any button for less than 2 seconds when the alarm sounds, except ~~Preset 3~~ESC button. SNOOZE will appear for 3 seconds and the alarm will be postponed for 9 minutes.

~~Dimming (DIMMING)~~

~~When the vehicle uses dimming by CAN or Analog configuration, the display will show DIMMING 0. This value can be adjusted from -10 to +10. Otherwise the display will show DIMMING and the current selected level from 0 to 30. Rotate the knob clockwise to increase the Dimming and counterclockwise to decrease it~~

~~HUE Adjustment (HUE ADJ)~~

~~Depending on the Radio colors available the display will show any of the following options:~~

~~AMBER or GREEN~~

~~RED or BLUE~~

~~Rotate the knob to change between the two options and press the knob to confirm selection. This option is only available in models equipped with Dual Color.~~

Audio Players

~~CD Player~~

~~The player can be used for CD and MP3 audio.~~
~~With the vehicle on, insert a discinto the slot, label side up. Theplayer pulls it in and begins playing.~~
~~The system is capable of playing:~~
- ~~Most audio CDs.~~
- ~~CD-R.~~
- ~~CD-RW.~~

Commented [REE79]: Cambiar la letra para que no se confnda de los temas y sub temas

Formatted: Heading 3, Left

Formatted: Pattern: Clear (Accent 3)

Formatted: Pattern: Clear (Accent 3)

Formatted: Normal

Formatted: Font: (Default) Univers-Light

Formatted: Indent: Left: 0.25"

Formatted: Indent: Left: 0.25", No bullets or numbering

MP3 or unprotected WMAformats.

When playing any compatiblerecordable disc, the sound qualitycan be reduced due to disc quality,the method of recording, the qualityof the music that has beenrecorded, or the way the disc hasbeen handled.
There can be increased skipping,difficulty in recording tracks,difficulty in finding tracks, and/ordifficulty in loading and ejecting.
If these problems occur, check thedisc for damage or try a knowngood disc.

To avoid damage to the CD player:

- Do not use scratched or damaged discs.
- Do not apply labels to discs. (The labels could get caught in the player).
- Insert only one disc at a time.
- Keep the loading slot free of foreign materials, liquids, and debris.
- Use a marking pen to label the top of the disc.

Loading and Ejecting Discs

To load a disc:

1. Turn the vehicle on.
2. Insert a disc into the slot, labelside up. The player pulls it in therest of the way. If the disc isdamaged or improperly loaded,there is an error on the screen and the discejects. The disc automatically plays onceloaded.
Press "Eject" to eject a disc from theCD player. If the disc is notremoved within a short period oftime, it is automatically pulled backinto the player.

Playing an Audio CD

1. Using SRC Button select the CD source.
2. Radio will start playing the CD and will show the track number, Song, Artist, elapsedtime, and Album informationdisplays when available.

Use the following controls to playthe disc:

PREV (Previous):

Press to seek to the beginning of the current or previous track.
If the track has been playing for less than ten seconds, it seeks to the previous track. If longer than ten seconds, the current track starts from the beginning.

NEXT(Next):

Press to seek to the next track.

Fast Reverse/Fast Reverse (FR/FR):

To fast forward or reverse through a track, press and hold Next or PREV button.

RDM (Random):

Press to play the tracks randomly. Press again to stop shuffle mode. Look for the RDM icon to turn on in the radio display.

RPT (Repeat):

Press to repeat current track. Press again to stop repeat. Look for the RPT icon to turn on in the radio display.

SCAN

Short Press to start the SCAN of the current playing context.
Long Press to SCAN the whole device starting on track1.

Folder Up (only available when playing MP3 CDs)

Press to select next Folder, if playing a specific playable scope, when pressed the radio plays track 1 as newly inserted USB.

Folder Down (only available when playing MP3 CDs)

Press to select previous Folder, if playing a specific playable scope, when pressed the radio plays track 1 as newly inserted USB.

Error Messages

If "**Disc Error**" message is displayed and/or the disc comes out, it could be for one of the following reasons:

- The disc has an invalid or unknown format.
- The disc is very hot. Try the disc again when the temperature returns to normal.
- The road is very rough. Try the disc again when the road is smoother.
- The disc is bent.
- The disc is dirty, scratched, wet, or upside down.
- The air is very humid. Try the disc again later.
- There was a problem while burning the disc.
- The label is caught in the CD player.
- If the disc is not playing correctly, for any other reason, try a known good CD.
- If any error continues, contact your dealer.

Formatted: Indent: Left: 0.25"

Formatted: Indent: Left: 0.25", No bullets or numbering

Formatted: Indent: Left: 0.25", No bullets or numbering

Formatted: Indent: Left: 0.25"

~~MP3~~

~~Playing an MP3 CD~~

~~To play an MP3 CD, follow the same instructions as for"Playing an Audio CD."~~

~~The following guidelines must be met when creating an MP3 disc; otherwise it might not play:~~

~~For MP3 Files~~

- ~~**Bit rates:** 32, 40, 48, 56, 64, 80, 96, 112, 124, 160, 192, 224, 256, 320 kbps for MPEG 1 Audio Layer 3.~~
- ~~**Sampling frequencies:** 32, 44.1 and 48 kHz for MPEG 1 Audio Layer 3.~~
- ~~Maximum number of folders: Eight folders with 255 filesper folder.~~
- ~~Maximum of 1,000 files on a disc.~~
- ~~M3U and PLS playlist versions supported.~~
- ~~Recorded on a CD-R or CD-RWwith a maximum capacity of700 MB.~~

~~For Unprotected WMA Files~~

- ~~**Versions:** 1, 2, 7, 8, 9 and 9.1.~~
- ~~**Bit rates:** 32 – 320 kbps.~~
- ~~**Sampling frequencies:** 32 – 48 kHz.~~

Music Navigation ~~CD MP3 and~~ USB

Press the magnifying glass (preset 12) button while ~~CD, MP3 or~~ USB source is active to access the ~~CD MP3/~~USB Music Menu.

Use the Volume Knob or Next/Prev button to navigate through the different options.

~~**The Radio has two Options**~~

~~*Folder Mode:*~~

~~Press the Volume Knob to view the folders stored on the disc. Select a folder to view the list of all songs in that folder. There might be a delay before the list displays. Select a song from the list to begin playback.~~

~~The folder structure can support up to five levels of depth. The folders and then songs will display in alphabetical order.~~

~~In this mode the folders are shown first and at the end the tracks of that folder.~~

~~*Playlist Mode*~~

~~Press the Volume Knob to view the playlists stored on the disc. Select a playlist to start playing the first track in the current selected playlist. There might be a delay before the list displays.~~

Special Considerations

Root Directory:

The root directory is treated as a folder. All files contained directly under the root directory are accessed prior to any root directory folders.

Empty Folders

If a root directory or folder is empty or contains only folders, the player advances to the next folder in the file structure that contains a compressed audio file. The empty folder(s) are not displayed or numbered.

OPTIONAL EQUIPMENT

Infrared Remote Control

Your receiver is compatible with an optional handheld remote control available from your dealer. The remote control will:

Formatted: Font: (Default) Univers-Light

Formatted: Font: (Default) Univers-Light

Formatted: Font: (Default) Univers-Light

Formatted: Normal, Left

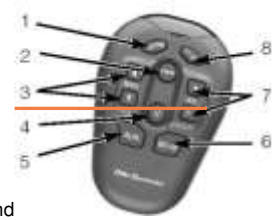

1. Select a band
2. Turn your receiver on and off
3. Select the next or previous track/ Seek up and down
4. Mute/Pause
5. Select ~~AUX inputs 1 or 2, iPod/USB~~Rear/Front AUX
6. ~~Play a CD~~Select iPod/USB/BT sources
7. Adjust volume
8. Select a preset station

Button Functions

BAND: Press this button to select FM1, FM2, AM or WX/LW.

PWR: Press this button to turn the receiver on/off.

SEEK ▼/▲: Press these buttons to move to the next available radio station or to go to the next track.

||: (or Pause) Press this button to reduce volume to a minimum. ~~The radio display will read~~

MUTE: To deactivate mute, press this button again. The audio source will continue to play while the volume is at a minimum.

AUX: Press this button to select Front Auxiliary, Rear Auxiliary, iPod/USB or Bluetooth® Audio.

~~**CD**~~**SOURCE:** Press this button to select iPod, USB, or BT~~Press this button to turn on your integrated CD player~~.

VOL +/-: Press this button to adjust the volume.

1 – 6: Press this button to advance through the presets in the selected band.

Fuse

Radio's fuse is located in the fuse box of the vehicle.
The optimal fuse values are between 10A and 15A.

Tips and Troubleshooting Chart

Radio

Unable to tune stations

You are in a weak signal area.

- Increase the Seek Sensitivity (see Seek Sensitivity section for details).

~~CD~~

~~CD player not functioning~~

~~Out of the operation range, Operation temperature of the CD is 20° to 55°C (-4°F to 131).~~

- ~~Allow the vehicle´s interior temperature to increase or decrease (depending on the case).~~

~~CD Insertion is not possible~~

~~A CD is already on the CD player.~~

- ~~Eject the CD and remove it.~~

iPod

iPod does not play or there is no sound

The iPod has not been recognized.

- Verify that the iPod is supported.
- If the iPod is supported, reset the iPod and re-connect again (see iPod section for details).

iPod not functioning

Out of the operation range, Operation temperature of theiPod player is -20° to 85°C (-4°F to 185).
Allow the vehicle´s interior temperature to be in human supportable range.

Bluetooth

My radio doesn't recognize my Bluetooth enabled device.

Try one of the following actions:

1. Remove the device, after that pair and connect the device. Refer to DELETE ONE

Formatted: Font color: Text 1

Formatted: Font color: Text 1

Formatted: Font color: Red

Formatted: Font color: Red

Formatted: Left

Commented [YC80]: Will read what?

OR DELETE ALL DEVICES and to Pairing a Bluetooth Device and Connecting a Device sections.
2. Make sure the device is turned on.
3. Make sure the Bluetooth adapter on your radio is enabled, Refer to Bluetooth Enabling/Disabling section.
4. The device might be out of range. Try moving it closer.

The device and my radio can't communicate.

Try one of the following actions:

1. Make sure that you selected the correct device to be connected to. For example, you might have two or more devices previously paired or connected, so make sure you selected the right device.
2. Some devices require a passkey before they can be connected to the radio.
3. Probably an incorrect passkey was typed or the time limit expired for typing the passkey. Refer to Connecting a Device section.
4. If the device is close to other devices that use radio frequencies (such as microwave ovens, cordless phones, remote controls for electronics or lighting, or 802.11 wireless networks), those devices might be creating interference. Try moving the device that isn't working farther away from the other devices.

Device music cannot be heard

1. Verify the device is paired and connected. Refer to sections: Pairing a Bluetooth Device and Connecting a Device.
2. Make sure BT AUDIO SRC is selected in the source list menu. Refer to PWR/SRC Button section.
3. Adjust the Volume on the radio by rotating the knob.
4. Verify that your device is not paused.
5. Make sure your device has music files.

Rear Seat Audio (RSA)

The RSA shows no link.

The radio requires up to 15 seconds to wake up, so if you wake up the radio using the RSA and the radio is in sleep mode, the RSA will show "no-link" while the radio starts. The communication shall be reestablished after this time lapse expires.

Trademarks and License Agreements

"Made for iPod" and "Made for iPhone" mean that an electronic accessory has been designed to connect specifically to iPod or iPhone and has been certified by the developer to meet Apple performance standards.

iPod and iPhone are trademarks of Apple Computer, Inc., registered in the U.S. and other countries.

"SiriusXM" means that the radio has been designed and certified to meet SiriusXM standards

SiriusXM isa trademark of SiriusXM Company registered in the U.S.

FCC Information
Radio is complaint with Part 15 of the Federal Communications Commission (FCC)rules and with Industry Canada Standards RSS-GEN/210/220/310.

Bluetooth
The Bluetooth® word mark and logos are owned by the Bluetooth® SIG, Inc. and any use of such marks by this radio is under license.

Precautions

Product Cleaning

Use a soft dry cloth for periodic cleaning. for more severe stains, please dampen the cloth with water only. Anything elsemight affect the appearance or damage the lens or plastics.

~~Moisture Condensation~~

~~You may notice the CD playback sound wavering due to the water condensation. If this happens~~

Commented [REE82]: I will delate this

Commented [FA81]: There is no mention of the auto baud rate detect for CAN, should this be added?

Amp-sense error, should this be mentioned?

Do we need to add some information about RSA module?

please remove the disc from the player and wait about an hour for the moisture to evaporate.

Damage Disc

Don't attempt the following

- To play a cracked, warped or damaged disc. Playing a bad disc could severely damage the playback mechanism.
- To grip or pull out the disc while it is being pulled back into the player by the automatic reloading mechanism.
- To insert a disc into the mechanism when the unit is powered OFF.

Bluetooth Distraction

When using a cell phone, it can be distracting to look too long or too often at the screen of the phone or the infotainment system. Taking your eyes off the road too long or too often could cause a crash resulting in injury or death.

Focus your attention on driving.

Conformity assessment issues

FCC/IC Regulatory Notice

Modification statement

Delphi Electronics & Safety has not approved any changes or modifications to this device by the user. Any changes or modifications could void the user's authority to operate the equipment.

Delphi Electronics&Safety n'approuve aucune modification apportée à l'appareil par l'utilisateur, quelle qu'en soit la nature. Tout changement ou modification peuvent annuler le droit d'utilisation de l'appareil par l'utilisateur.

Interference statement

This device complies with Part 15 of the FCC Rules and Industry Canada licence-exempt RSS standard(s). Operation is subject to the following two conditions: (1) this device may not cause interference, and (2) this device must accept any interference, including interference that may cause undesired operation of the device.

Le présent appareil est conforme aux CNR d'Industrie Canada applicables aux appareils radio exempts de licence. L'exploitation est autorisée aux deux conditions suivantes : (1) l'appareil ne doit pas produire de brouillage, et (2) l'utilisateur de l'appareil doit accepter tout brouillage radioélectrique subi, même si le brouillage est susceptible d'en compromettre le fonctionnement.

Radiation Exposure Statement

This device complies with FCC/IC radiation exposure limits set forth for an uncontrolled environment and meets the FCC radio frequency (RF) Exposure Guidelines in Supplement C to OET65 and RSS-102 of the IC radio frequency (RF) Exposure rules. This transmitter must not be co-located or operating in conjunction with any other antenna or transmitter.

Le présent appareil est conforme à l'exposition aux radiations FCC / IC définies pour un environnement non contrôlé et répond aux directives d'exposition de la fréquence de la FCC radiofréquence (RF) dans le Supplément C à OET65 et RSS-102 de la fréquence radio (RF) IC règles d'exposition. L'émetteur ne doit pas être colocalisé ni fonctionner conjointement avec à autre antenne ou autre émetteur.

FCC Class B digital device notice

This equipment has been tested and found to comply with the limits for a Class B digital device, pursuant to part 15 of the FCC Rules. These limits are designed to provide reasonable protection against harmful interference in a residential installation. This equipment generates, uses and can radiate radio frequency energy and, if not installed and used in accordance with the instructions, may cause harmful interference to radio communications. However, there is no guarantee that interference will not occur in a particular installation. If this equipment does cause harmful interference to radio or television reception, which can be determined by turning the equipment off and on, the user is encouraged to try to correct the interference by one or more of the following measures:

- Reorient or relocate the receiving antenna.
- Increase the separation between the equipment and receiver.
- Connect the equipment into an outlet on a circuit different from that to which the receiver is connected.
- Consult the dealer or an experienced radio/TV technician for help.

CAN ICES-3 (B) / NMB-3 (B)

This Class B digital apparatus complies with Canadian ICES-003.

Cet appareil numérique de classe B est conforme à la norme canadienne ICES-003.

Bluetooth

Formatted: Normal, Left

Formatted: Left, Space After: 10 pt, Line spacing: Multiple 1.15 li, Adjust space between Latin and Asian text, Adjust space between Asian text and numbers

Commented [FA83]:

Commented [FA84]:

Frequency range:	2402-2480MHz carrier frequencies
Maximum RF output power:	+4dBm
Modulations:	GFSK; π/4 DQPSK and 8DPSK
Channel Spacing:	1 MHz
Number of channels:	79
Channel bandwidth:	1MHz for GFSK, ~ 1.2MHz for π/4-DQPSK and 8DPSK
Type of Antenna:	Brand Amotech part number ALA32IC3 chip antenna /Gain 2.3dbi
Antenna gain:	+ 2.3 dBi Max

AM

Frequency range:	531 KHz to 1602 KHz
Maximum RF output power:	+/- 6 dBi typical
Modulations:	Amplitude modulation
Channel Spacing:	9KHz
Type of Antenna:	0.75m typical monopole
Antenna gain:	0dBuV to 130dBuV

FM

Frequency range:	87.5MHz to 108 MHz
Maximum RF output power:	+/- 6 dBi typical
Modulations:	Frecuency modulation
Channel Spacing:	100KHz

Type of Antenna:	0.75m typical monopole
Antenna gain:	0dBuV to 130dBuV

Simplified EU Declaration of Conformity/RED 2014/53/EU

Country	Simplified EU Declaration of Conformity/RED 2014/53/EU	Operating Band	Max Peak EIRP
Language	—	—	-
Čeština (CZ)	Delphi Deutschland GmbH, 42367 Wuppertal tímto prohlašuje, že tento DEA5 je ve shodě se základními požadavky a dalšími příslušnými ustanoveními směrnice 2014/53/EU (RED). Původní prohlášení je k dispozici na následujícím odkazu www.delphi.com/automotive-homologation	frekvenční pásmo 2402 - 2480 MHz	Maximální výstupní výkon 4 dBm (2.5mW EIRP)
Dansk (DK)	Undertegnede Delphi Deutschland GmbH, 42367 Wuppertal erklærer herved, at følgende udstyr DEA5XX overholder de væsentlige krav og øvrige relevante krav i direktiv 2014/53/EU (RED). Den oprindelige overensstemmelseserklæring kan ses her www.delphi.com/automotive-homologation	frekvensbånd 2402 - 2480 MHz	Maksimal udgangseffekt 4 dBm (2.5mW EIRP)
Deutsch (DE)	Hiermit erklärt Delphi Deutschland GmbH, 42367 Wuppertal, dass sich das Gerät DEA5XX in Übereinstimmung mit den grundlegenden Anforderungen und den übrigen einschlägigen Bestimmungen der Richtlinie 2014/53/EU (RED) befindet. Die Original Konformitätserklärung kann unter folgendem Link www.delphi.com/automotive-homologation abgerufen werden.	Frequenzbanz 2402 - 2480 MHz	Maximale Sendeleistung 4 dBm (2.5mW EIRP)
Eesti (EE)	Käesolevaga kinnitab Delphi Deutschland GmbH, 42367 Wuppertal seadme DEA5XX vastavust direktiivi 2014/53/EL (RED) põhinõuetele ja nimetatud direktiivist tulenevatele teistele asjakohastele sätetele. Algne vastavusdeklaratsiooni saab vaadata siin www.delphi.com/automotive-homologation	sagedusalas 2402 - 2480 MHz	Maksimaalne väljundvõimsus 4 dBm (2.5mW EIRP)
English (UK)	Hereby, Delphi Deutschland GmbH, 42367 Wuppertal declares that this DEA5XX is in compliance with the essential requirements and other relevant provisions of Directive 2014/53/EU (RED). The original delegation of conformity can be accessed at the following link www.delphi.com/automotive-homologation	frequency band 2402 - 2480 MHz	Maximum Output Power 4 dBm (2.5mW EIRP)
Español (ES)	Por medio de la presente Delphi Electronics &Safety, 2151 Lincoln RD Kokomo IN USA declara que el DEA5XX cumple con los requisitos esenciales y cualesquiera otras disposiciones aplicables o exigibles de la Directiva 2014/53/UE (RED). La primera declaración conformidad se puede encontrar en el siguiente enlace www.delphi.com/automotive-homologation	banda de frecuencia 2402 - 2480 MHz	potencia de salida máxima 4 dBm (2.5mW EIRP)
Ελληνικά (EL)	ΜΕ ΤΗΝ ΠΑΡΟΥΣΑ Delphi Deutschland GmbH, 42367 Wuppertal PLC ΔΗΛΩΝΕΙ ΟΤΙ DEA5XX ΣΥΜΜΟΡΦΩΝΕΤΑΙ ΠΡΟΣ ΤΙΣ ΟΥΣΙΩΔΕΙΣ ΑΠΑΙΤΗΣΕΙΣ ΚΑΙ ΤΙΣ ΛΟΙΠΕΣ ΣΧΕΤΙΚΕΣ ΔΙΑΤΑΞΕΙΣ ΤΗΣ ΟΔΗΓΙΑΣ 2014/53/ΕΕ(RED). Η αρχική συμμόρφωση δήλωση μπορεί να έχει πρόσβαση στην ακόλουθη www.delphi.com/automotive-homologation σύνδεσμο	ζώνη συχνοτήτων 2402 - 2480 MHz	Μέγιστη ισχύς εξόδου 4 dBm (2.5mW EIRP)
Français (FR)	Par la présente Delphi Deutschland GmbH, 42367 Wuppertal déclare que l'appareil DEA5XX est conforme aux exigences essentielles et aux autres dispositions pertinentes de la directive 2014/53/UE (RED). La déclaration conformité originale peut être consultée à l'adresse suivante www.delphi.com/automotive-homologation	bande de fréquence 2402 - 2480 MHz	Puissance de sortie maximale 4 dBm (2.5mW EIRP)
Íslenska (IS)	Hér með lýsir Delphi Deutschland GmbH, 42367 Wuppertal yfir því að DEA5XX er í samræmi við grunnkröfur og aðrar kröfur, sem gerðar eru í tilskipun 2014/53/EU (RED). Upprunalega samræmisyfirlýsing er hægt að skoða hér www.delphi.com/automotive-homologation""pobj.	tíðnisviði 2402 - 2480 MHz	Hámarks framleiðsla máttur 4 dBm (2.5mW EIRP)
Italiano (IT)	Con la presente Delphi Deutschland GmbH, 42367 Wuppertal dichiara che questo DEA5XX è conforme ai requisiti essenziali ed alle altre disposizioni pertinenti stabilite dalla direttiva 2014/53/UE (RED).La dichiarazione di conformità originale può essere vista qui www.delphi.com/automotive-homologation	banda di frequenza 2402 - 2480 MHz	Potenza massima di uscita 4 dBm (2.5mW EIRP)
Hrvatski (HR)	Ovim putem Delphi Deutschland GmbH, 42367 Wuppertal portvrđuje da je DEA5XX uređaj u skladu s osnovnim zahtjevima i drugim važnim odredbama direktive 2014/53 / EU (RED). Originalna izjava o sukladnosti može se pogledati ovdje www.delphi.com/automotive-homologation""pobj	frekvencijski pojas 2402 - 2480 MHz	Maksimalna izlazna snaga 4 dBm (2.5mW EIRP)

Formatted: English (United States)

Commented [REE85]: Checar fechas

Formatted: English (United States)

Formatted: English (United States)

Formatted: English (United States)

Formatted: English (United States)

Latviešu (LV)	Ar šo Delphi Deutschland GmbH deklarē, ka DEA5XX atbilst Direktīvas 2014/53/ES (RED) būtiskajām prasībām un citiem ar to saistītajiem noteikumiem. Sākotnējais atbilstības deklarācija var apskatīt šeit www.delphi.com/automotive-homologation~~pobj	frekvenču josla 2402 - 2480 MHz	Maksimālā izejas jauda 4 dBm (2.5mW EIRP)		Nederlands (NL)	Hierbij verklaart Delphi Deutschland GmbH, 42367 Wuppertal dat het toestel DEA5XX in overeenstemming is met de essentiële eisen en de andere relevante bepalingen van richtlijn 2014/53/EU (RED). De originele verklaring van overeenstemming kan hier www.delphi.com/automotive-homologation worden bekeken	frequentieband 2402 - 2480 MHz	Maximum uitgangsvermogen 4 dBm (2.5mW EIRP)		Română (RO)	Prin prezenta Delphi Deutschland GmbH, 42367 Wuppertal că DEA5XX dispozitivul este în conformitate cu cerințele esențiale și alte prevederi relevante ale Directivei 2014/53 / UE (RED). Declarația inițială de conformitate poate fi vizualizat aici www.delphi.com/automotive-homologation	bandă de frecvență 2402 - 2480 MHz	putere maximă de ieșire 4 dBm (2.5mW EIRP)
Lietuvių (LT)	Šiuo Delphi Deutschland GmbH, 42367 Wuppertal deklaruoja, kad šis DEA5XX atitinka esminius reikalavimus ir kitas 2014/53/ES (RED) Direktyvos nuostatas. Originali atitikties deklaracija gali būti čia www.delphi.com/automotive-homologation~~pobj peržiūrėtas	dažnių juosta 2402 - 2480 MHz	Maksimali išėjimo galia 4 dBm (2.5mW EIRP)		Norsk (NO)	Delphi Deutschland GmbH, 42367 Wuppertal erklærer herved at utstyret DEA5XX er i samsvar med de grunnleggende krav og øvrige relevante krav i direktiv 2014/53/EU (RED). Den originale samsvarserklæringen kan sees her www.delphi.com/automotive-homologation	frekvensbånd 2402 - 2480 MHz	Maksimal utgangseffekt 4 dBm (2.5mW EIRP)		Suomi (FI)	Delphi Deutschland GmbH, 42367 Wuppertal vakuuttaa täten että DEA5XX tyyppinen laite on direktiivin 2014/53/EU (RED) oleellisten vaatimusten ja sitä koskevien direktiivin muiden ehtojen mukainen. Alkuperäinen vaatimustenmukaisuusvakuutus on nähtävissä täällä www.delphi.com/automotive-homologation	taajuuskaista 2402 - 2480 MHz	Suurin teho 4 dBm (2.5mW EIRP)
Magyar (HU)	Alulírott, Delphi Deutschland GmbH, 42367 Wuppertal nyilatkozom, hogy a DEA5XX megfelel a vonatkozó alapvető követelményeknek és az 2014/53/EU (RED) irányelv egyéb előírásainak. Az eredeti megfelelőségi nyilatkozat itt tekinthető www.delphi.com/automotive-homologation	frekvenciasávban 2402 - 2480 MHz	Maximális kimeneti teljesítmény 4 dBm (2.5mW EIRP)		Polski (PL)	Niniejszym Delphi Deutschland GmbH, 42367 Wuppertal oświadcza, że DEA5XX jest zgodny z zasadniczymi wymogami oraz pozostałymi stosownymi postanowieniami Dyrektywy 2014/53/UE (RED). Oryginalny deklaracja zgodności można obejrzeć tu www.delphi.com/automotive-homologation~~pobj	pasmo częstotliwości 2402 - 2480 MHz	Maksymalna moc wyjściowa 4 dBm (2.5mW EIRP)		Svenska (SK)	Härmed intygar Delphi Deutschland GmbH, 42367 Wuppertal att denna DEA5XX står I överensstämmelse med de väsentliga egenskapskrav och övriga relevanta bestämmelser som framgår av direktiv 2014/53/EU (RED). Den ursprungliga försäkran om överensstämmelse kan ses här www.delphi.com/automotive-homologation	frekvensband 2402 - 2480 MHz	Maximal uteffekt 4 dBm (2.5mW EIRP)
Malti (MT)	Hawnhekk, Delphi Deutschland GmbH, 42367 Wuppertal, jiddikjara li dan DEA5XX jikkonforma mal-ħtiġijiet essenzjali u ma provvedimenti oħrajn relevanti li hemm fid-Direttiva 2014/53/UE (RED). Id-dikjarazzjoni ta 'konformità oriġinali tista' tiġi analizzata hawnhekk www.delphi.com/automotive-homologation	medda ta 'frekwenza 2402 - 2480 MHz	qawwa massima ta 'ħruġ 4 dBm (2.5mW EIRP)		Português (PT)	Delphi Deutschland GmbH, 42367 Wuppertal declara que este DEA5XX está conforme com os requisitos essenciais e outras disposições da Directiva 2014/53/UE (RED). A declaração de conformidade original pode ser visto aqui www.delphi.com/automotive-homologation	banda de frequência 2402 - 2480 MHz	potência máxima de saída 4 dBm (2.5mW EIRP)		Slovensky (SL)	Delphi Deutschland GmbH, 42367 Wuppertal týmto vyhlasuje, že DEA5XX spĺňa základné požiadavky a všetky príslušné ustanovenia Smernice 2014/53/EÚ (RED). Pôvodný vyhlásenie o zhode je k dispozícii tu www.delphi.com/automotive-homologation~~pobj prezrieť	frekvenčné pásmo 2402 - 2480 MHz	Maximálny výstupný v 4 dBm (2.5 EIRP)

Formatted: English (United States)

Formatted: English (United States)

Formatted: English (United States)

Formatted: English (United States)

Slovensko (SI)	Delphi Deutschland GmbH, 42367 Wuppertal izjavlja, da je ta DEA5XX v skladu z bistvenimi zahtevami in ostalimi relevantnimi določili direktive 2014/53/ES (RED). Prvotni izjavo o skladnosti si lahko ogledate tukaj www.delphi.com/automotive-homologation	frekvenčni pas 2402 - 2480 MHz	Maksimalna izhodna moč 4 dBm (2.5mW EIRP)

- Bluetooth 2402 - 2480 MHz4 dBm (2,5 mW) EIRP
- AM 531 - 1602 kHz
- FM 87,5 - 108,0 MHz

Standard reference	Article of Directive 2014/53/EU
EN 60950-1:2006 + A11:2009 + A1:2010 + A12:2011 + AC:2011 + A2:2013	3.1 (a): Health and Safety of the User
EN 301 489-1 V2.1.1 EN 301 489-17 V3.1.1 EN 55020:2007 + A11:2011 EN 55032 (2016) / AC (2016)	3.1 (b): Electromagnetic Compatibility
EN 300 328 V2.1.1 EN 303 345 V1.1.1	3.2 : Effective use of spectrum allocated

EU DECLARATION OF CONFORMITY Directive 2014/53/EU

Antero Cuervo
IDI - Commercial Vehicles Tech Manager
antero.cuervo@delphi.com
Phone +1 956 228 6585
Date: June 22 2017

Hereby declares the manufacturer

Delphi Electronics & Safety

Address:2151 East Lincoln Rd
Kokomo Indiana 46904
United States of America

We declare on our sole responsibility, that the following product is in compliance with Directive 2014/53/EU and the essential requirements of .

Car Radio
Type Designation: DEA500
HW Rev A SW Rev B
Service(s) with Frequency Range and max. Output Power:

Conformity assessment issues

FCC/IC Regulatory Notice

Modification statement

Aptiv Electronics & Safety has not approved any changes or modifications to this device by the user. Any changes or modifications could void the user's authority to operate the equipment.

Aptiv Electronics&Safety n'approuve aucune modification apportée à l'appareil par l'utilisateur, quelle qu'en soit la nature. Tout changement ou modification peuvent annuler le droit d'utilisation de l'appareil par l'utilisateur.

Interference statement

This device complies with Part 15 of the FCC Rules and Industry Canada licence-exempt RSS standard(s). Operation is subject to the following two conditions: (1) this device may not cause interference, and (2) this device must accept any interference, including interference that may cause undesired operation of the device.

Le présent appareil est conforme aux CNR d'Industrie Canada applicables aux appareils radio exempts de licence. L'exploitation est autorisée aux deux conditions suivantes : (1) l'appareil ne doit pas produire de brouillage, et (2) l'utilisateur de l'appareil doit accepter tout brouillage radioélectrique subi, même si le brouillage est susceptible d'en compromettre le fonctionnement.

The Notified Body, Dekra Testing and Certification, number 1909, performed an EU type examination and issued the certificate: 53627RNB.001.

Kokomo, Indiana. June 22, 2017.

Antero Cuervo IDI - Commercial Vehicles Tech Manager

Signed for and on behalf of Delphi Electronics & Safety.

Kokomo Indiana United States of America

Formatted: English (United States)
Formatted: English (United States)
Formatted: English (United States)
Formatted: English (United States)
Commented [FA86]:
Formatted: French (France)
Formatted: English (United States)

DELPHI

DECLARATION OF CONFORMITY
Directive 2014/53/EU

Hereby declares the manufacturer

Delphi Electronics & Safety

Address: 2151 East Lincoln Rd
Kokomo Indiana 46904
United States of America

We declare on our sole responsibility, that the following product

Car Radio
Type Designation:DEA800
HW Rev A SW Rev B
Service(s) with Frequency Range and max. Output Power
Bluetooth: [illegible]
AM 531 - 1602kHz
FM 87,5- 108,0MHz

is in compliance with Directive 2014/53/EU and the essential requirements of .

Essential requirements	Specifications / Standards	Submitted do
Article 3.1(a): Electrical safety	EN 60950-1:2006 + A11:2009 + A1:2010 + A12:2011 + AC:2011 + A2:2013	Test report
Article 3.1(a): EMF exposure	EN 62479:2010	Calculation
Article 3.1(b): EMC	Draft EN 301 489-1 V2.2.0 EN 301 489-17 V3.2.0 [1] EN 55020:2007 + A11:2011 EN 55032:2015 EN 61000-3-2: 2006 + A1: 2009 + A2: 2009 EN 61000-3-3: 2008	Test report
Article 3.2: Radio spectrum use	EN 300 328 V2.1.1 [1] Final Draft EN 303 345 v1.1.7	Test report

The Notified Body, Delux Testing and certification performed an EU type examination and i
certificate: No53627RNB 001

Kokomo Indiana Jun 13, 2017

Andrew Dreiser, IDI - Commercial Vehicles Tech Ma
signed for and on behalf of Delphi Electronics & Sa
Kokomo Indiana United States of America

Delphi Electronics & Safety www.delphi.com