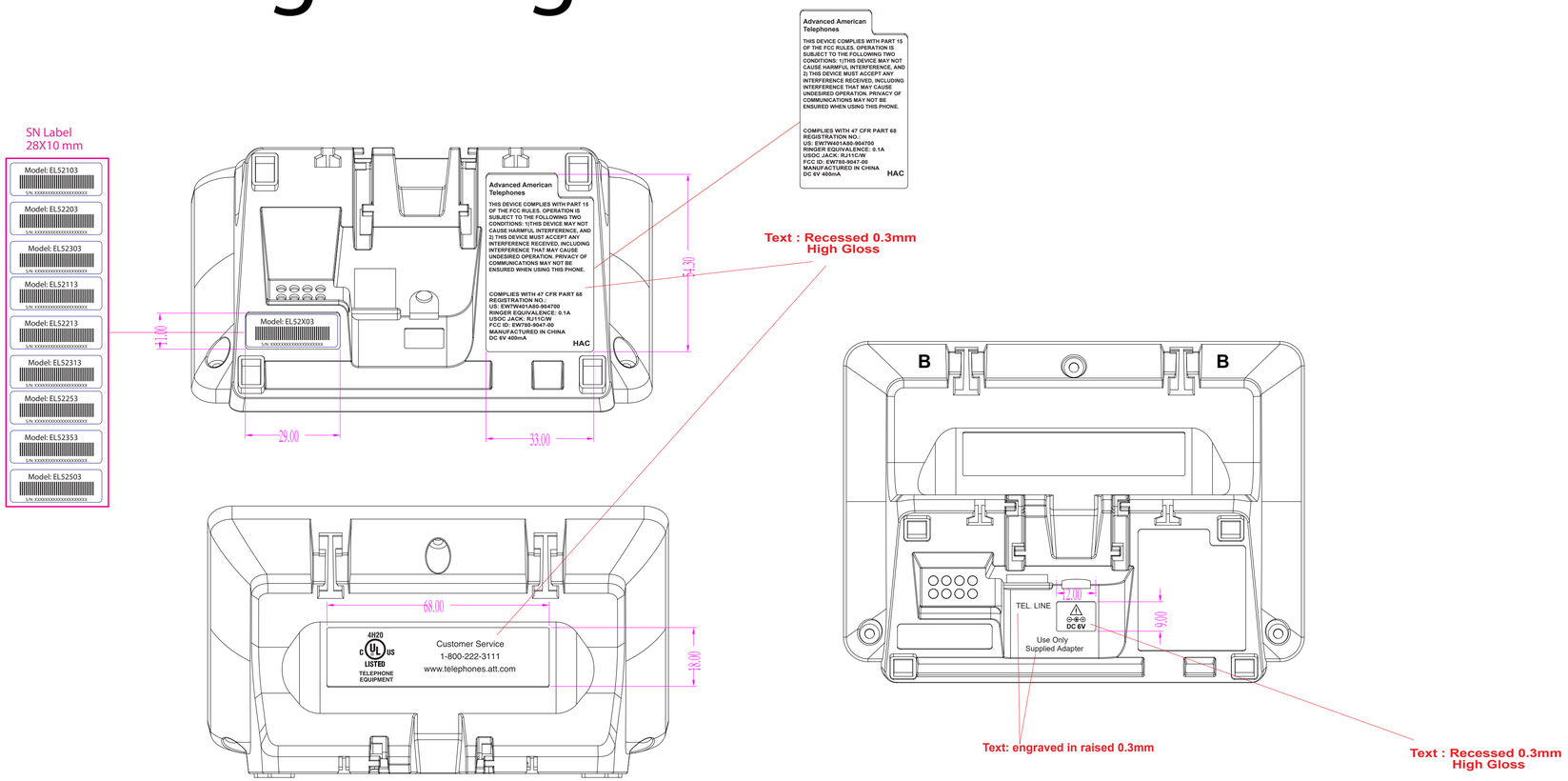EL52X03 Engraving File