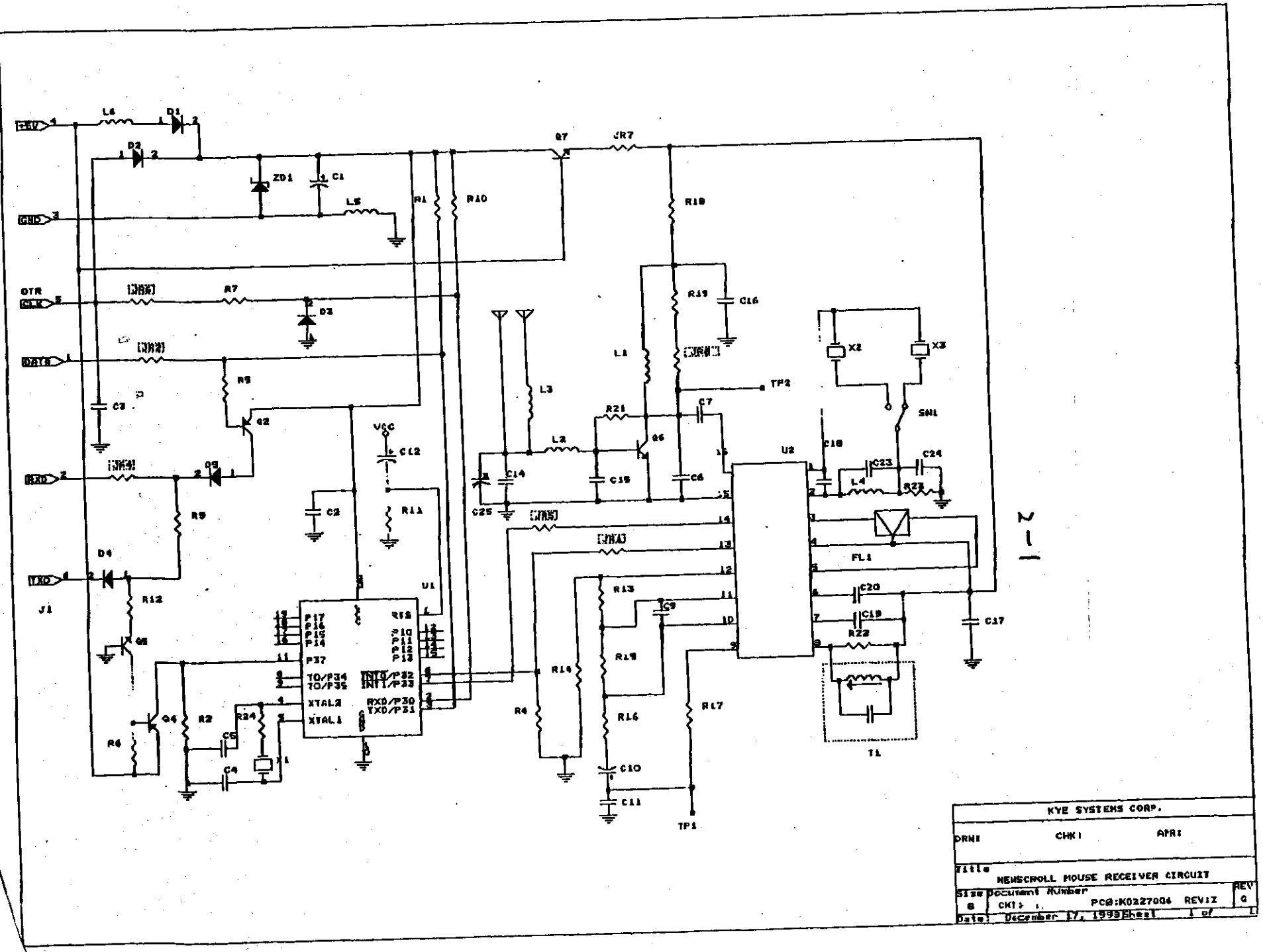
KYE SYSTEMS CORP.
DRN:
CHK:
APR:
Title
NEWSCROLL MOUSE RECEIVER CIRCUIT
Size
B
Document Number
CKT:
PCB:K0227006
REV:2
REV
G
Date: December 17, 1999
Sheet 1 of 1
HEV
GND
DTR
CLK
DATA
RXD
TXD
J1
L6
D1
D2
ZD1
C1
L5
R1
R10
Q7
JR7
R18
R19
C16
R7
D3
R5
Q2
C3
D5
R9
D4
R12
Q5
Q4
R6
R2
R24
C5
C4
X1
VCC
C12
C2
R11
U1
P17
P16
P15
P14
P37
T0/P34
T0/P35
XTAL2
XTAL1
RST
P10
P11
P12
P13
INT0/P32
INT1/P33
RXD/P30
TXD/P31
L1
L3
L2
R21
Q6
C7
C6
C14
C15
C25
TP2
U2
X2
X3
SW1
C18
C23
C24
L4
R23
FL1
C20
C19
R22
C17
T1
R13
C9
R14
R15
R16
R17
R4
C10
C11
TP1