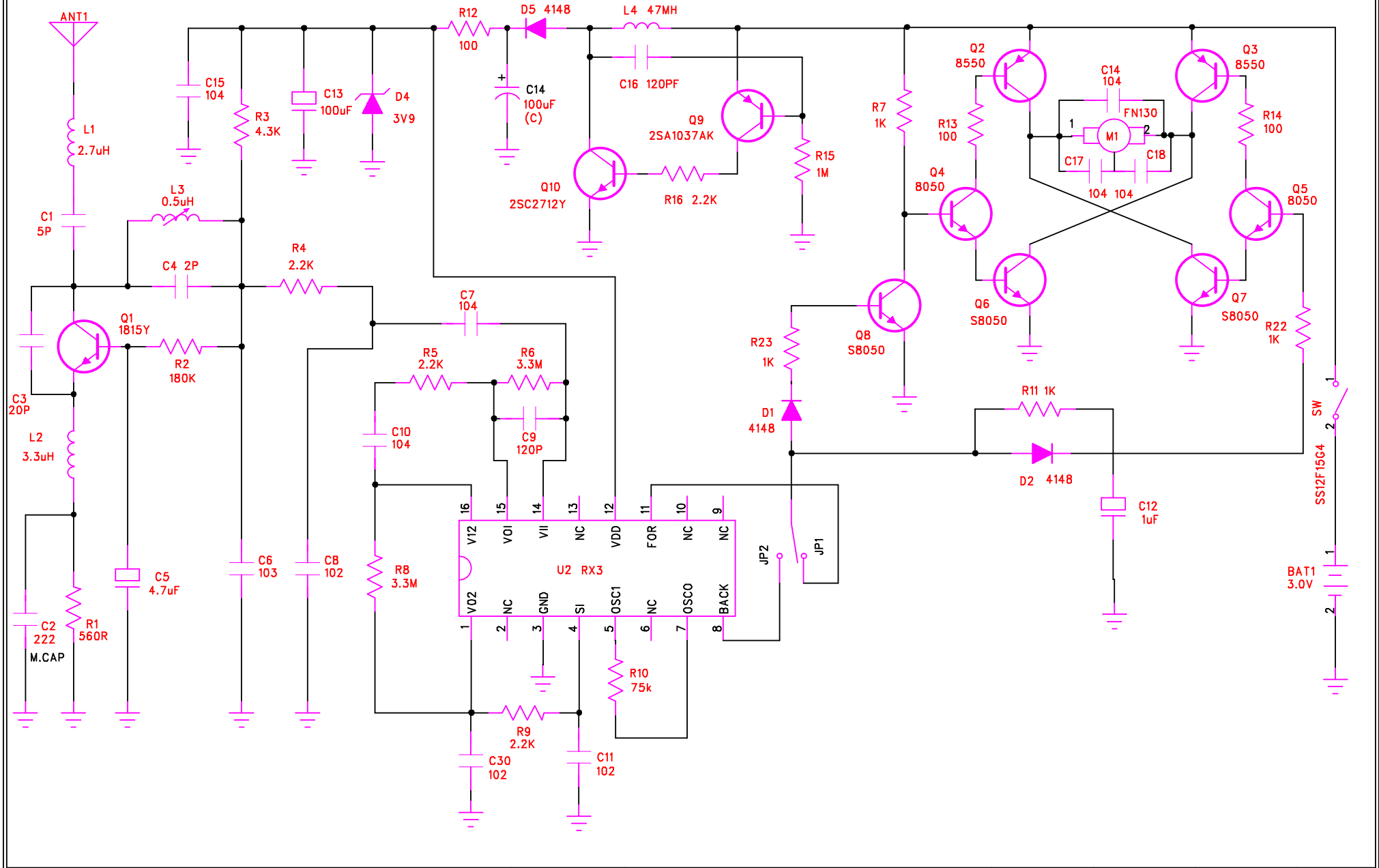

LUNG CHEONG	TITLE:	E882 RX 49MHX FCC	DESIGN BY:	DRAWING BY:	APPROVED BY:	SHEET:
	FUNCTION:	CATERPILAR	QW SHI	QW SHI		1 of 1
	DWG NO:	DZ01-00E822-01	04-28-2005	04-28-2005		