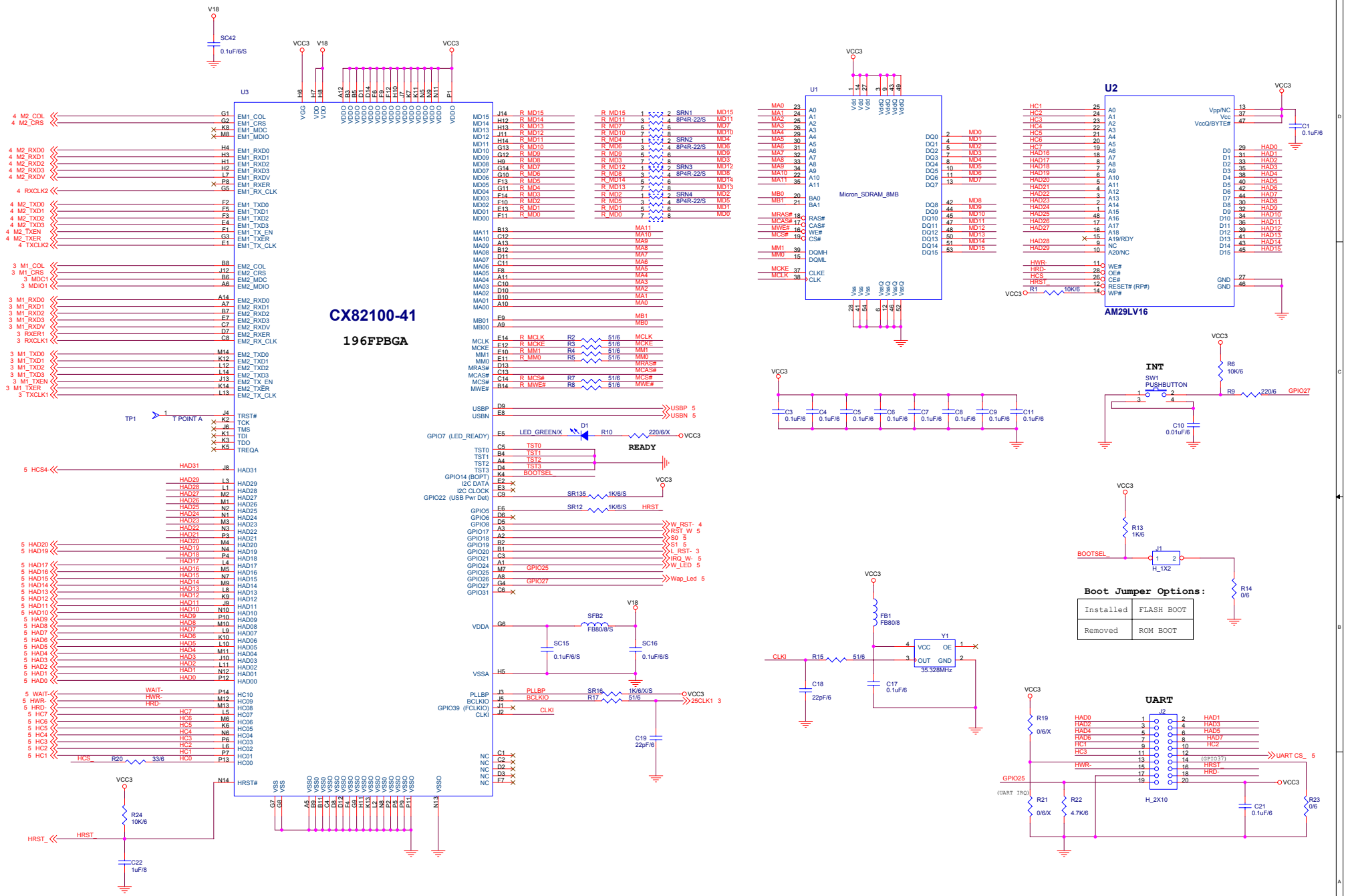

Title: GN-APb101

Size: C | Document Number: ARM_DRAM_Flash_UART | Rev: 0.1V

Date: 星期一, 四月 21, 2003 | Sheet 2 of 5

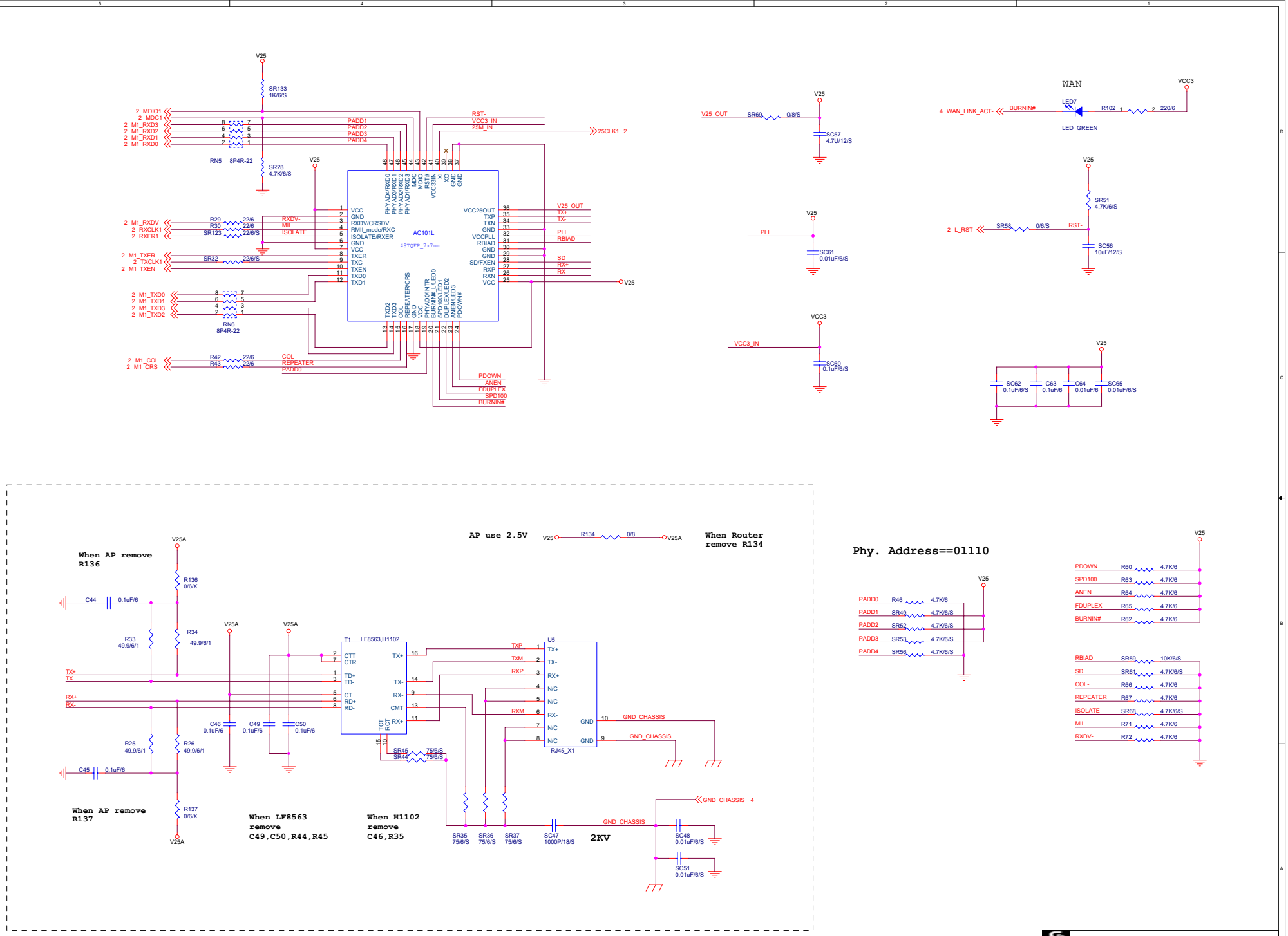
AC101L
48TQFP_7x7mm
WAN
LED7
LED_GREEN
Phy. Address==01110
When AP remove R136
When AP remove R137
When LF8563 remove C49,C50,R44,R45
When H1102 remove C46,R35
AP use 2.5V
When Router remove R134
2KV
T1 LF8563,H1102
U5 RJ45_X1
GN-APb101
Size C
Document Number
Rev 0.1V
Date: 星期一, 四月 21, 2003
Sheet 3 of 5

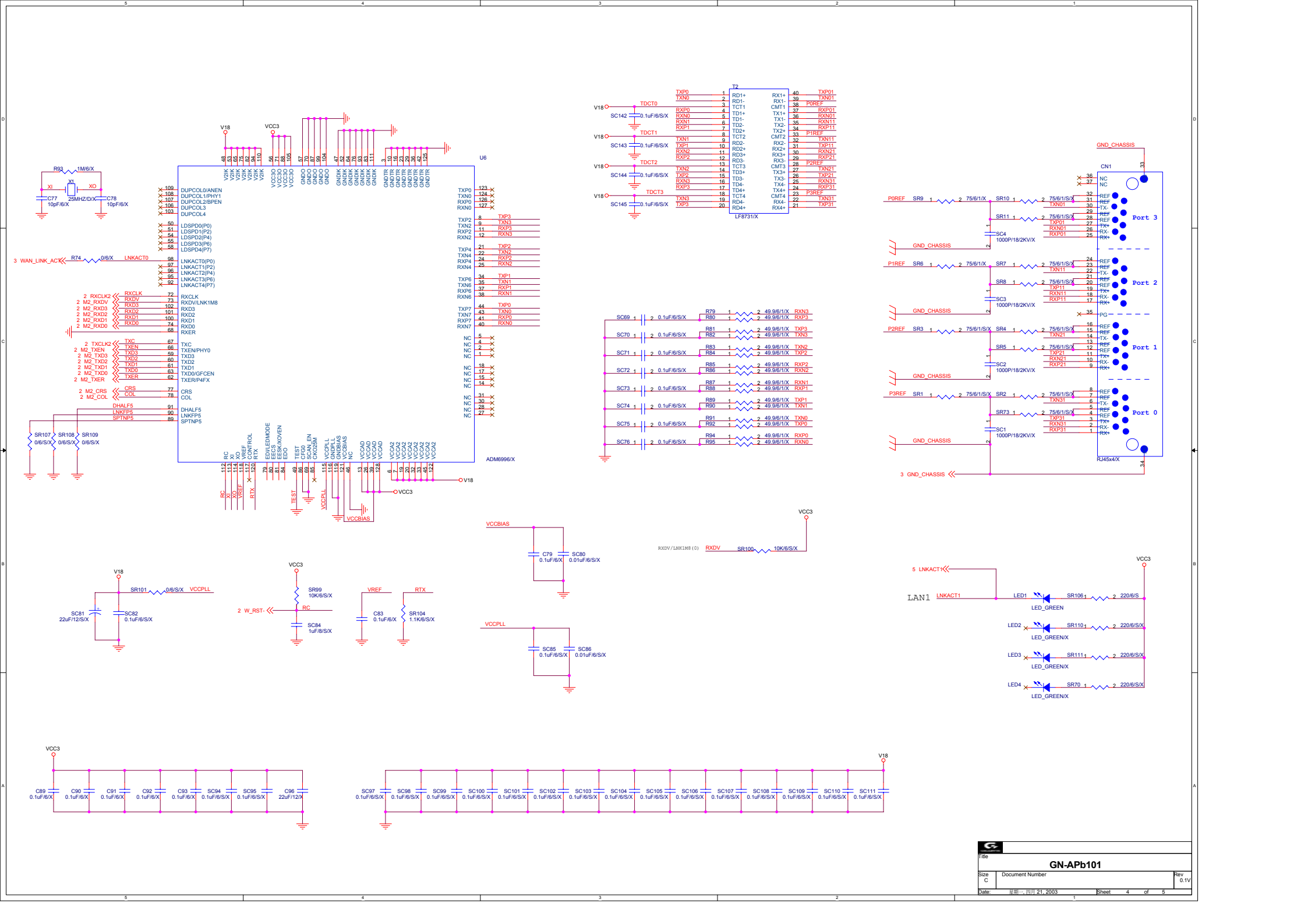
U6
ADM6996/X
T2
LF8731/X
CN1
RJ45x4/X
Port 3
Port 2
Port 1
Port 0
GND_CHASSIS
LAN1
LED_GREEN
LED_GREEN/X
VCC3
V18
VCCBIAS
VCCPLL
W_RST-
WAN_LINK_ACT
LNKACT1
Title
GN-APb101
Size
C
Document Number
Rev
0.1V
Date:
星期一, 四月 21, 2003
Sheet
4
of
5

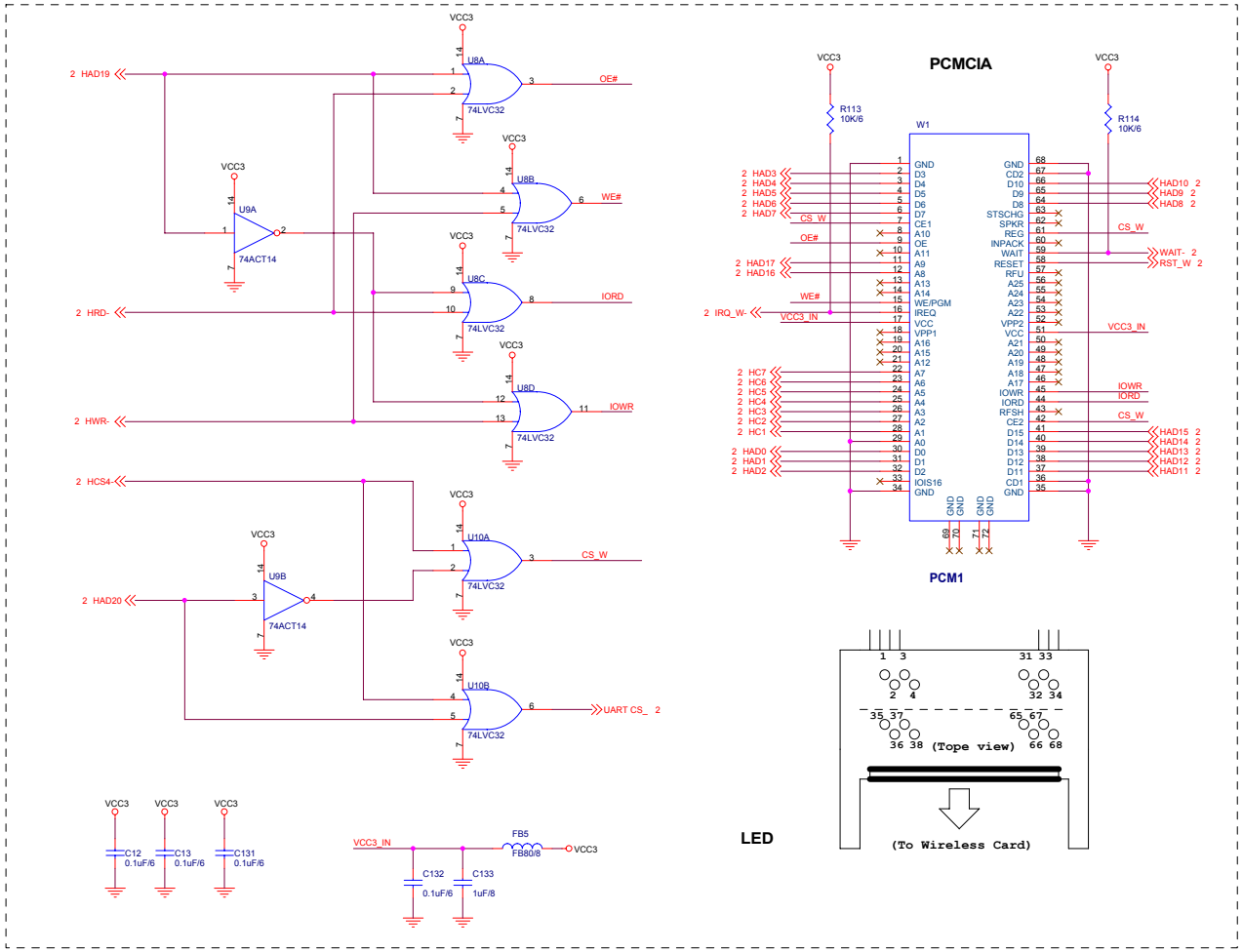

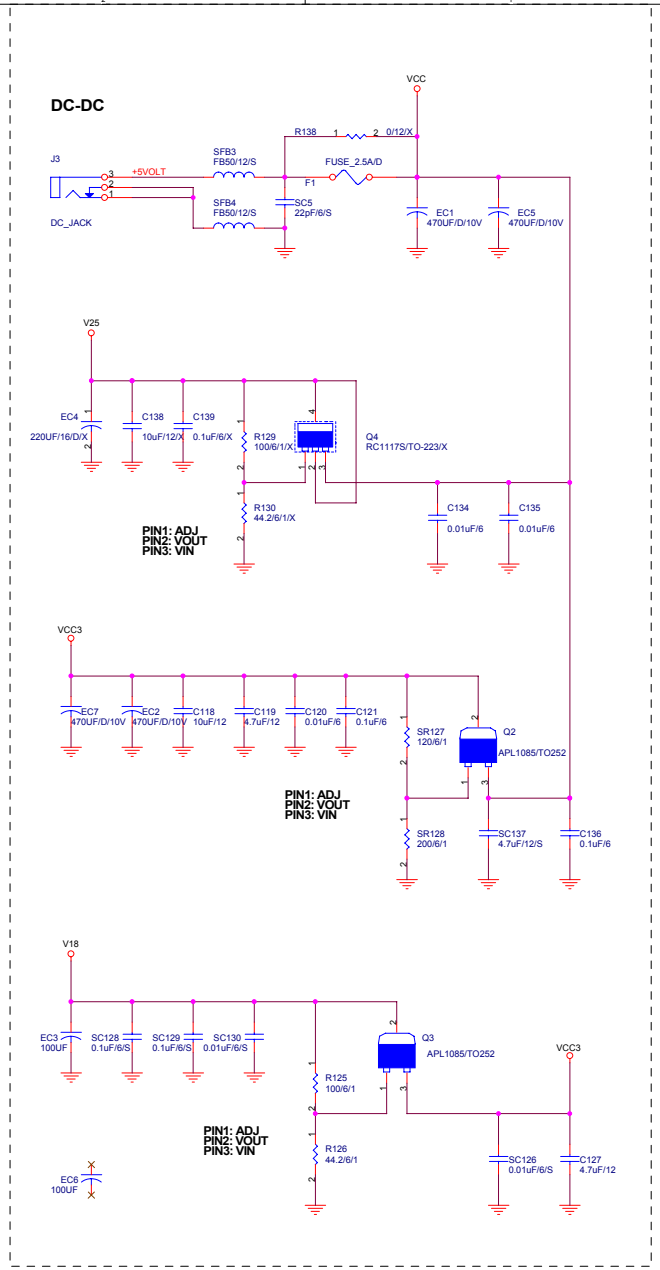

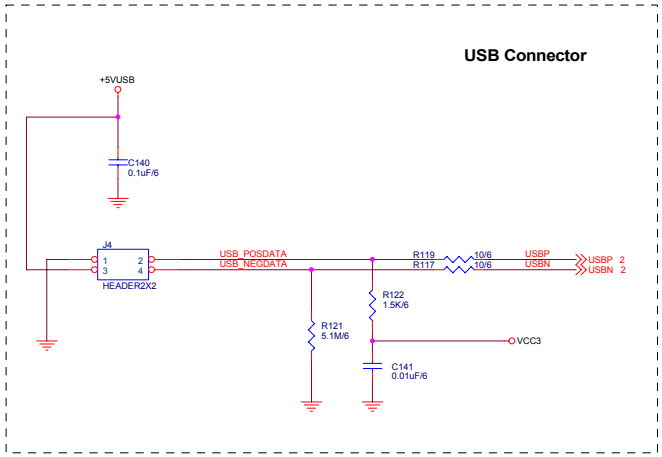

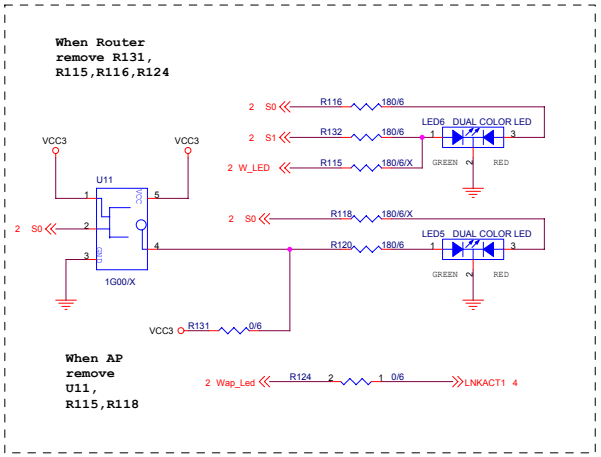

GN-APb101

Size	Document Number	Rev
C	PCMCIA_POWER_USB_LED_JTAG	0.1V

Date: 星期一, 四月 21, 2003 Sheet 5 of 5