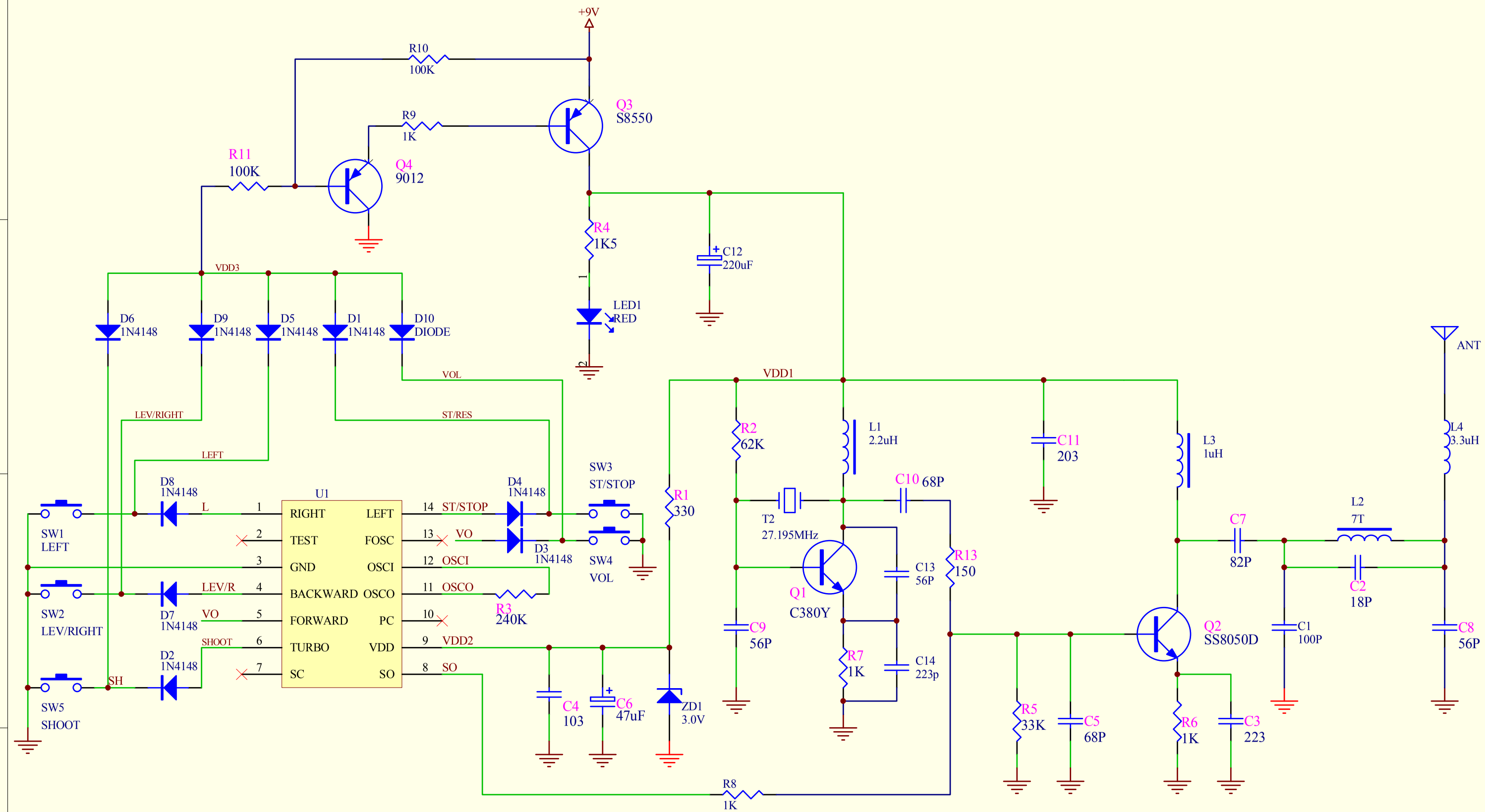

EDU-SCIENCE (H.K.) LIMITED

Model Name		Manager		Data	
Model No.		Examine		Data	
PCB Name		Draw		Data	
Size		Revision:			
File Path	H:\Share\EED\Design\PCB\R&D\PB001\PB001(DPY)\PB001.DDB - Documents\SCH\TX-TEST				Sheet of

EDU-TOYS

Electric Engineer Department