CUSTOMER	00018	CUSTOMER`S P/N	
ISSUE DATE	**2022/8/12**	PRODUCT SPEC	ZH-4016-Q48

2.DIMENSION：(mm)

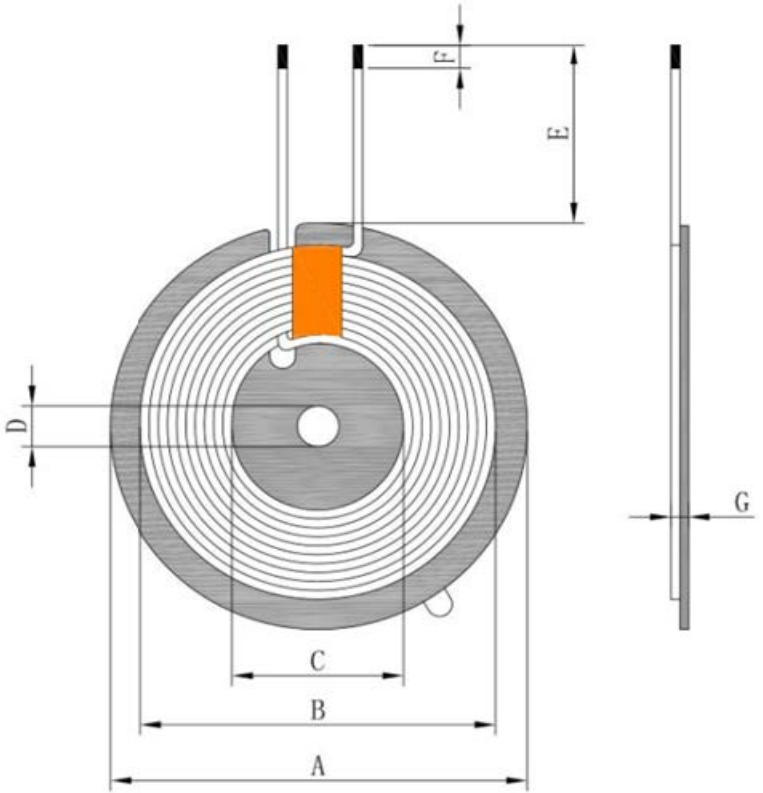

A	49±1.0
B	43.0REF
C	20.0±0.5mm
D	φ5.2±0.5
E	15±2.0
F	3.0 MAX
G	2.0±0.5

Note: Apply double-sided adhesive tape on the back of the magnetic disc