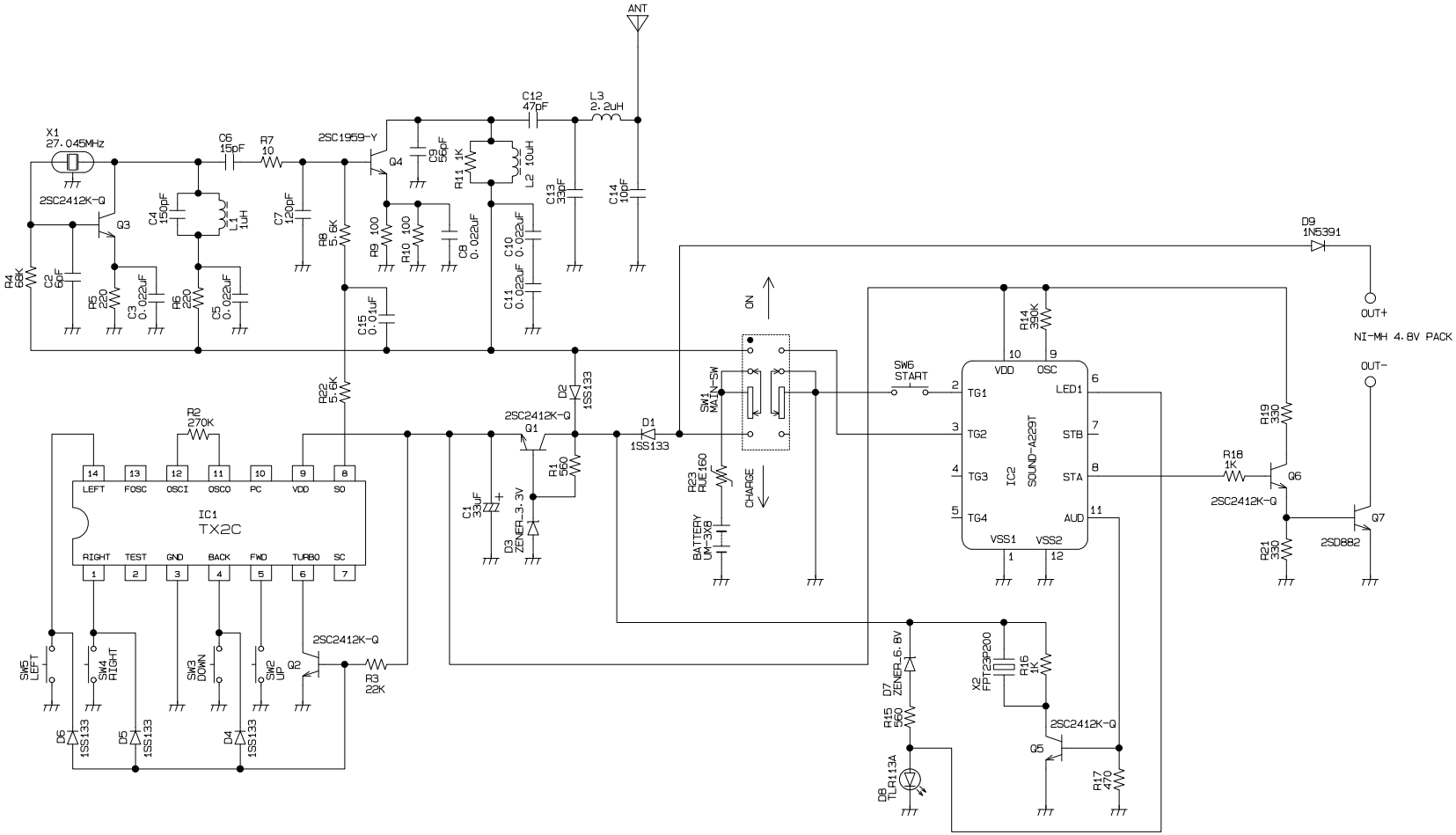

TRANSMITTER	
TY-D1321-1 27.045MHz	
Drawing No.	TAIYO KOGYO CO.,LTD