PROPRIETARY AND CONFIDENTIAL
THE INFORMATION CONTAINED IN THIS DRAWING IN ITS ENTIRETY IS THE SOLE PROPERTY OF SENSITECH INCORPORATED. ANY REPRODUCTION IN PART OR AS A WHOLE WITHOUT THE WRITTEN PERMISSION OF SENSITECH INCORPORATED IS PROHIBITED.

REV	DESCRIPTION	ENG	DRW	DATE
A	INITIAL DRAWING PER EC-014-17	MH	CC	12DEC17
A	RELEASE PER EC-005-18	MH	TNS	30MAY18

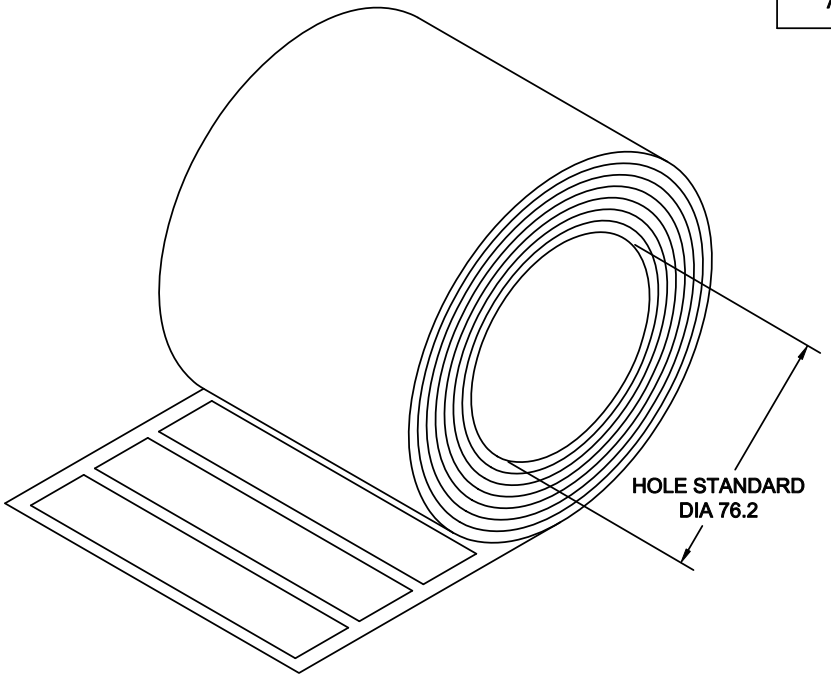

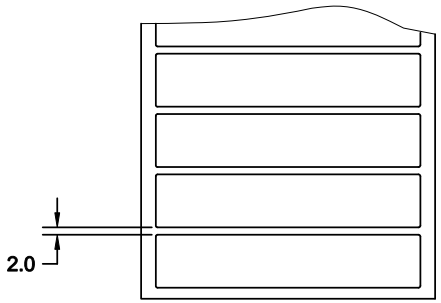

NOTES:
1.MATERIAL: FASSON NO 72828
2.COLOR: WHITE.
3.FINISH: GLOSSY SURFACE.
4.UNIT:MM.
5.RECEIVED MATERIALS MUST BE IN ROLLS AS SHOWN.
6.THIS PART MUST BE ROHS/REACH/WEEE COMPLIANT.

SCALE = 1:1

NOTES:
1. FONT: TSC SAN SERIF
2. TEXT COLOR: BLACK
3. BARCODE: CODE 128

GEOMETRY AND GRAPHICS DETAIL

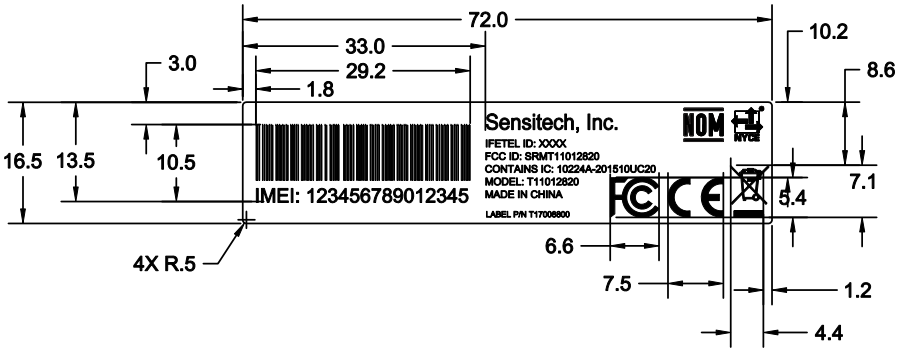

TEXT DETAIL

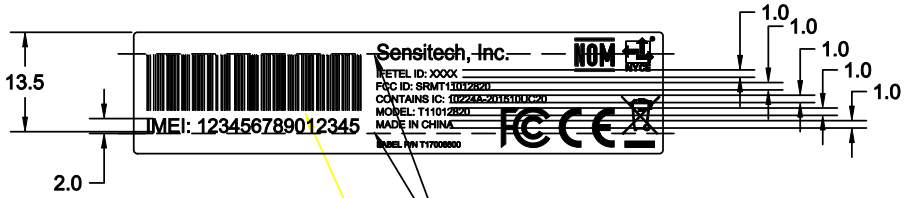

THE NUMBER AND BARCODE SHOWN IS AN EXAMPLE. IN PRODUCTION, EACH LABEL SHALL HAVE THE IMEI OF THE INSTALLED RADIO MODULE DISPLAYED IN NUMERIC AND BARCODE FORMAT. CARE MUST BE TAKEN TO ENSURE ANY LABEL PLACED ON A UNIT DISPLAYS THE MATCHING IMEI OF THE INSTALLED RADIO MODULE.

ALL TEXT/ICONS SHOULD BE KEPT WITHIN THE VERTICAL EXTENTS OF IMEI BARCODE/TEXT.

SCALE = 2:1

-ALL DIMENSIONS IN MILLIMETERS-

UNLESS OTHERWISE SPECIFIED	DRAWN: C. CLEMMONS	DATE: 12DEC17
DIMENSIONS ARE IN INCHES MILLIMETERS ARE IN BRACKETS	ENGINEER: M. HIGGINS	12DEC17
TOLERANCES: .XX [.XX] ±.01 [.25] .XXX [.XXX] ±.005 [.13] ANGULAR: MACH .X0± .50° BEND .X0±1.00°	CHECKED: -	-
	DIVISION/DEPT: -	
ALL MACH SURFACES 63	MATERIAL: SEE	
THIS DRAWING INCORPORATES THIRD ANGLE PROJECTION	FINISH: SEE	
DO NOT SCALE DRAWING	FILENAME: T17008800revA.DWG	

SENSITECH
United Technologies
SUPPLY CHAIN VISIBILITY
Sensitech Inc.
800 Cummings Center
Suite 258X
Beverly, MA 01915

LABEL DRAWING
TTGEO HAWK QUECTEL
IMEI/DEVICE ID LABEL

SIZE	DRAWING NO.	REV
A	T17008800	B

SCALE: NONE | SHEET 1 OF 1
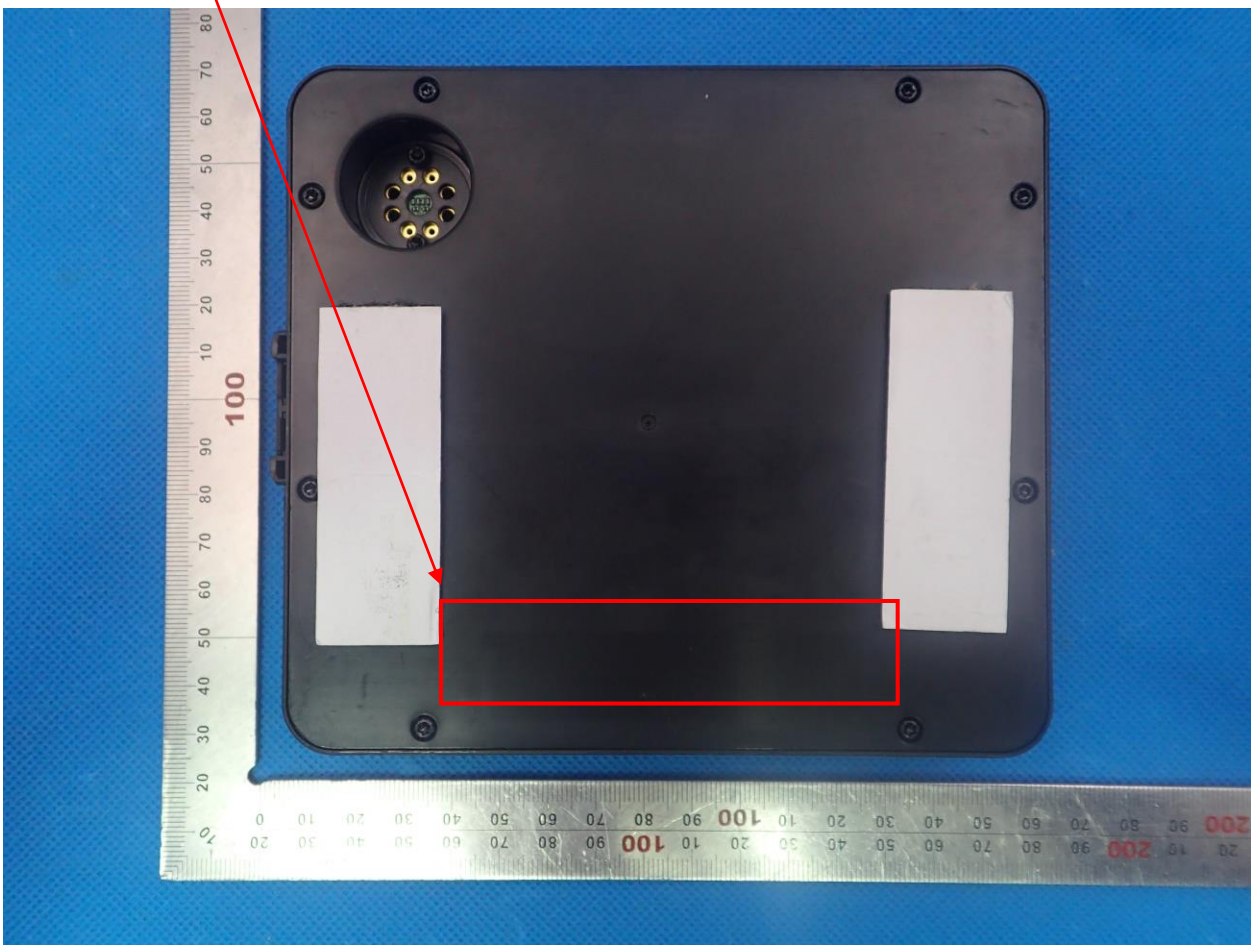
Label Location