Project Name	SX4
Vendor	Shenzhen ZTX Communication Technology Co., LTD.
Address	No.34 Shilong Road, Bao'an District, Shenzhen, Guangdong Province, China
Antenna Name	ANT6
Model Name	ZTX-SX4-NFC-A1.1
Frequency	13.56 MHz
Antenna Type	Loop

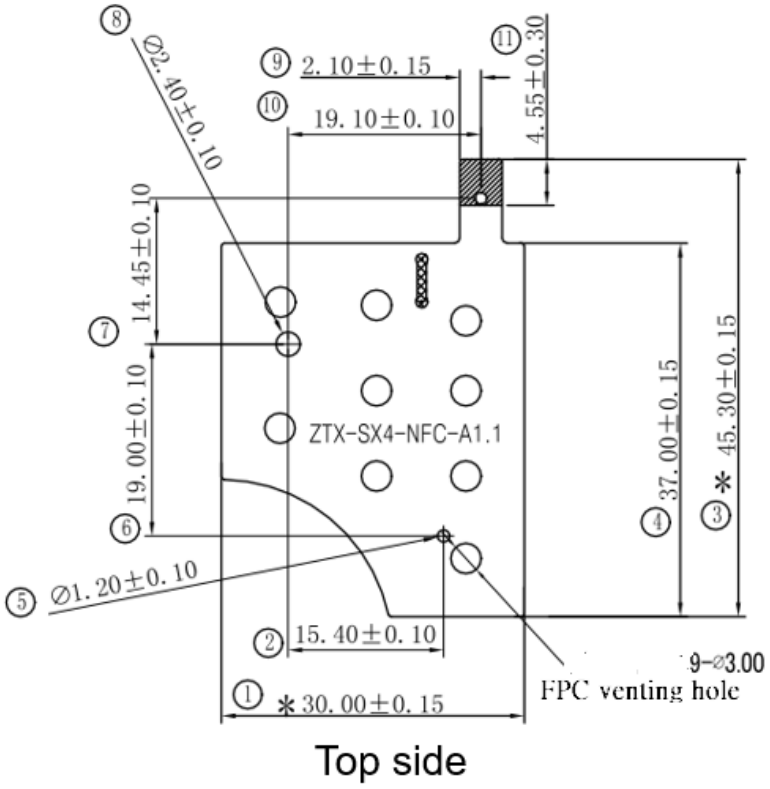

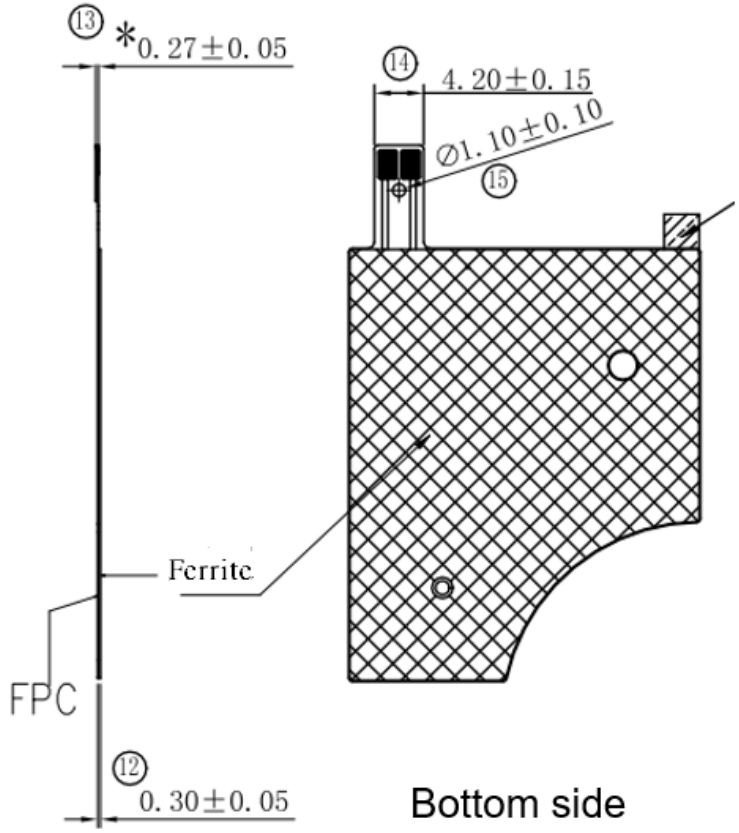

Antenna: Dimensions (unit: mm)