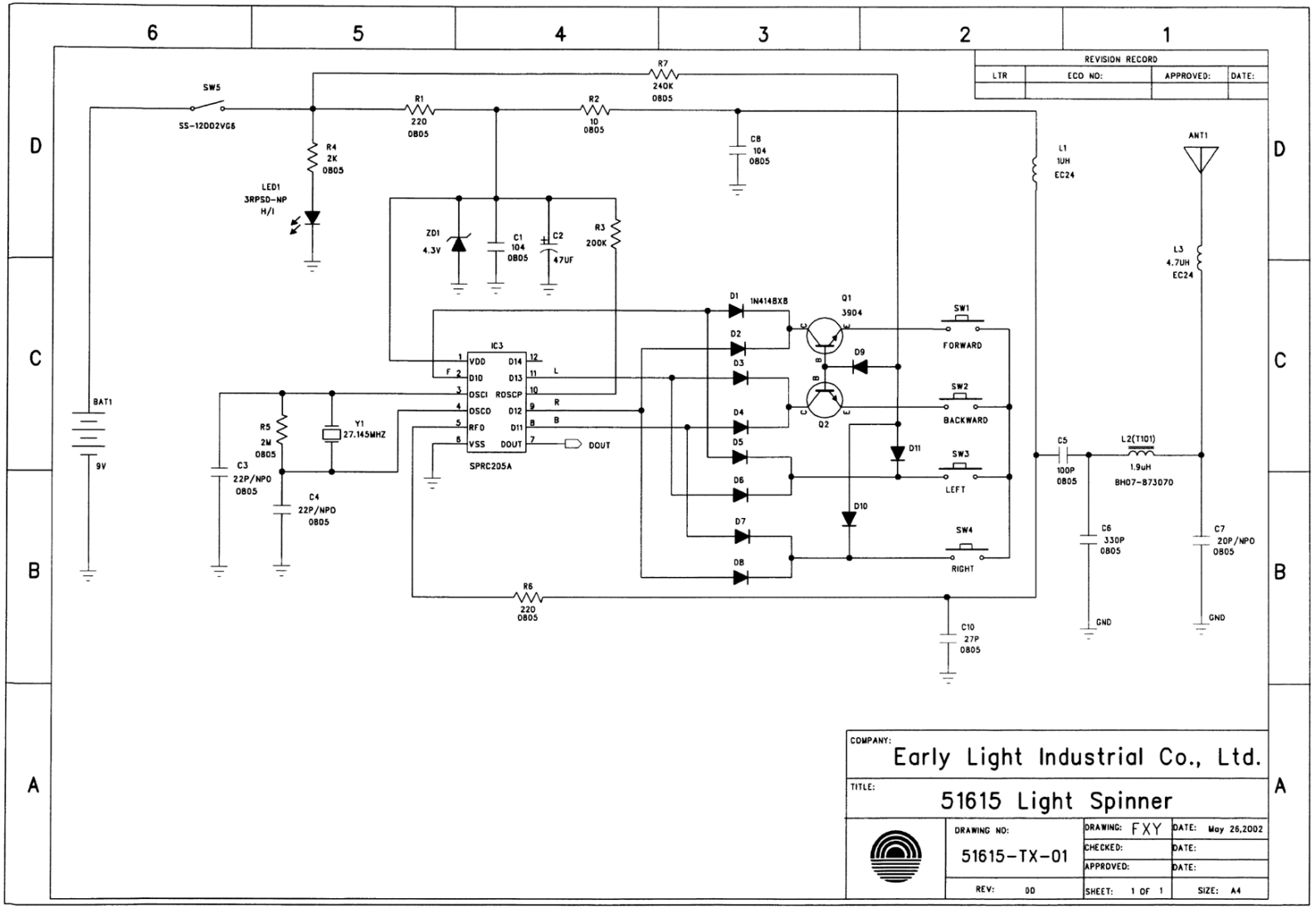
6
5
4
3
2
1
D
C
B
A
REVISION RECORD
LTR
ECO NO:
APPROVED:
DATE:
SW5
SS-12D02VG6
R7
240K
0805
R1
220
0805
R2
10
0805
C8
104
0805
R4
2K
0805
LED1
3RPSD-NP
H/I
ZD1
4.3V
C1
104
0805
C2
47UF
R3
200K
L1
1UH
EC24
ANT1
L3
4.7UH
EC24
D1
1N4148X8
D2
D3
D4
D5
D6
D7
D8
Q1
3904
Q2
D9
D10
D11
SW1
FORWARD
SW2
BACKWARD
SW3
LEFT
SW4
RIGHT
IC3
VDD
D10
OSCI
OSCO
RFO
VSS
D14
D13
ROSCP
D12
D11
DOUT
SPRC205A
F
L
R
B
DOUT
BAT1
9V
R5
2M
0805
Y1
27.145MHZ
C3
22P/NPO
0805
C4
22P/NPO
0805
R6
220
0805
C10
27P
0805
C5
100P
0805
L2(T101)
1.9uH
BH07-B73070
C6
330P
0805
C7
20P/NPO
0805
GND
GND
COMPANY:
Early Light Industrial Co., Ltd.
TITLE:
51615 Light Spinner
DRAWING NO:
51615-TX-01
DRAWING: FXY
DATE: May 26,2002
CHECKED:
DATE:
APPROVED:
DATE:
REV: 00
SHEET: 1 OF 1
SIZE: A4