microlab

Trekker 200

BLUETOOTH EARPHONE

Bluetooth®

Important Safety Instructions

IMPORTANT SAFETY INSTRUCTIONS

1. Read these instructions – All the safety and operating instructions should be read before this product is operated.
2. Keep these instructions – The safety and operating instructions should be retained for future reference.
3. Heed all warnings – All warnings on the appliance and in the operating instructions should be adhered to.
4. Follow all instructions – All operating and use instructions should be followed.
5. Do not use this apparatus near water – The appliance should not be used near water or moisture – for example, in a wet basement or near a swimming pool, and the like.
6. Clean only with dry cloth.
7. Do not block any ventilation openings. Install in accordance with the manufacture's instructions.
8. Do not install near any heat sources such as radiators, heat registers, stoves, or other apparatus (including amplifiers) that produce heat.
9. Only use attachments/accessories specified by the manufacturer.
10. Use only with the cart, stand, tripod, bracket, or table specified by the manufacturer, or sold with the apparatus. When a cart or rack is used, use caution when moving the cart/apparatus combination to avoid injury from tip-over.
11. Unplug the apparatus during lightning storms or when unused for long periods of time.
12. Refer all servicing to qualified personnel. Servicing is required when the apparatus has been damaged in any way, such as power supply cord or plug is damaged, liquid has been spilled or objects have fallen into the apparatus has been exposed to rain or moisture, does not operate normally, or has been dropped.
13. WARNING: To reduce the risk of fire or electric shock, do not expose this apparatus to rain or moisture. The apparatus shall not be exposed to dripping or splashing and that objects filled with liquids, such as vases, shall not be placed on apparatus.
14. CAUTION: Danger of explosion if battery is incorrectly replaced. Replace only with the same or equivalent type.
15. WARNING: The battery (battery or batteries or battery pack) shall not be exposed to excessive heat such as sunshine, fire or the like.
16. This lightning flash with arrowhead symbol within an equilateral triangle is intended to alert the user to the presence of non-insulated "dangerous voltage"within the product`s enclosure that may be of sufficient magnitude to constitute a risk of electric shock.

    Warning: To reduce the risk of electric shock, do not remove cover (or back) as there are no user-serviceable parts inside. Refer servicing to qualified personnel.

    The exclamation point within an equilateral triangle is intended to alert the user to the presence of important operating and maintenance instructions in the literature accom panying the appliance.
17. Correct Disposal of this product. This marking indicates that this product should not be disposed with other household wastes throughout the EU. To prevent possible harm to the environment or human health from uncontrolled waste disposal, recycle it responsibly to promote the sustainable reuse of material resources. To return your used device, please use the return and collection systems or contact the retailer where the product was purchased. They can take this product for environmental safe recycling.
18. No naked flame sources, such as lighted candles, should be placed on the apparatus.
19. Replacement parts - When replacement parts are required, ensure the service technician has used replacement parts specified by the manufacturer or have the same characteristics as the original part. Unauthorized substitutions may result in fire, electric shock or other hazards.
20. Try to install the product near a wall socket or extension cord and shall be easily accessible.
21. The highest environmental temperature suitable for this product is 0˚C to 35˚C for indoor use only .

CAUTION

RISK OF ELECTRIC SHOCK DO NOT OPEN

ATTENTION: RISQUE DE CHOC ELECTRIQUE NE PAS OUVRIR

FCC and Canada EMC Compliance Iinformation

This device complies with part 15 of the FCC Rules. Operation is subject to the following two conditions: (1) This device may not cause harmful interference, and (2) this device must accept any interference received, including interference that may cause undesired operation.

Note: This equipment has been tested and found to comply with the limits for a Class B digital device, pursuant to part 15 of the FCC Rules. These limits are designed to provide reasonable protection against harmful interference in a residential installation. This equipment generates uses and can radiate radio frequency energy and, if not installed and used in accordance with the instructions, may cause harmful interference to radio communications. However, there is no guarantee that interference will not occur in a particular installation. If this equipment does cause harmful interference to radio or television reception, which can be determined by turning the equipment off and on, the user is encouraged to try to correct the interference by one or more of the following measures:

- Reorient or relocate the receiving antenna.
- Increase the separation between the equipment and receiver.
- Connect the equipment into an outlet on a circuit different from that to which the receiver is connected.
- Consult the dealer or an experienced radio/TV technician for help.

Any Changes or modifications not expressly approved by the party responsible for compliance could void the user's authority to operate the equipment.

The device has been evaluated to meet general RF exposure requirement. The device can be used in portable exposure condition without restriction.

1. Overview

Before you start using the headset, you must charge the battery and pair the headset with a compatible device.

2. Charging the headset and box

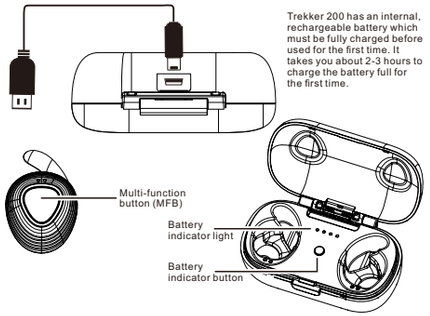

A. Put the headsets into the charging box and close the box to charge. During charging, the indicator shows a steady red. When the battery is fully charged, the red light will turn off.

B. You can charge the charging box either by using the AC travel charger, USB charging cable or the car charger. When the charging box is fully charged, all of the four LED lights will turn blue.

The fully charged battery has power for up to 3-4 hours of talking time or up to 100 hours of standby time.

When the battery is running out of power, the red indicator light starts to flash every 20 seconds with prompt of "low battery, please charge.". This indicates that the headset needs to be charged as soon as possible.

Battery display of the charging box: click on the button on the charging box, you will see the battery status through the four blue LED. And the display will turn off automatically after 4 seconds.

3. Functional operation

1) Switch on or off the headset

To switch on, when TREKKER 200 is in off state, press and hold the answer/end key for 3 seconds until the blue indicator light starts to flash for 3 times with prompt of "power on".

To switch off, when TREKKER 200 is in on state, press and hold the answer/end key for 3 seconds until the red indicator light flashes for 3 times with prompt of "power off"

2) Pair and connect the headset with a compatible phone

TWS Paring: When the TREKKER 200 are in off state, press and hold the answer/end key of both headsets for 7 seconds until the blue and red light flash alternatively, now they will pair and connect automatically with prompt "connected, left channel, right channel, get into paring mode".

A. After TWS connecting successfully, the blue and red light of left (main) headset flash alternatively with prompt of pairing, which means the pair of headsets are now in paring mode.

B. Once the Bluetooth connection between headset and mobile phone is disconnected by hand, the headset will get into pairing mode automatically.

Pairing is the process of establishing link between TREKKER 200 and Bluetooth devices. If no pairing is made over 5 minutes, the headset will retreat pairing mode.

Step-1) The headset must be powered off before you begin to initiate the paring.
Step-2) Press and hold the answer/end key for 7 second until the blue and red light flash alternatively. The headset is now in paring mode.
Step-3) Activate the Bluetooth feature on the phone, and set the phone to search for Bluetooth devices. Check the user guide of your phone for instructions.
Step-4) Select the headset (TREKKER 200) from the list of found devices.
When you open the Bluetooth function on mobile phone, you will find two TREKKER 200 on the list of found devices. After a while, it will be one only, then choose TREKKER 200 and connect it with Bluetooth mobile phone.
Step-5) When asked the PIN code, please enter "0000" to pair and connect the headset to your phone. In some phones you may need to make the connection separately after pairing. See the user guide of your phone for details.
If the pairing is successful, the headset enters idle state and blue light will flash 1 time every 7 seconds. connect the headset and mobile phone, and you will hear "pairing successful, connected". The headset's name appears in the phone menu where you can view the currently paired Bluetooth devices.

If no Bluetooth connection is made within 10 minutes, the headset will turn off automatically.

Troubleshooting

CAUTION

If you cannot connect the headset to your phone, do as follows:

· Ensure that the headset is charged, switched on, paired with and connected to your phone.
· Ensure that the Bluetooth feature is activated on your phone.
· Check that the headset is within 10 meter (30 feet) of your phone and that there are no obstructions between the headset and the phone, such as walls or other electronic devices.

Auto reconnection

When the two TREKKER 200 are in off state, switch them on at the same time, they will reconnect automatically. And the left (main) headset will reconnect to the paired mobile phone automatically too.

4. Basic use

4.1 Make a call
To make a call, use your phone in the normal way when the headset is connected to your phone. The sound will be transmitted to the headset automatically.
4.2 Answer a call
When there is incoming call, press the answer/end key, or use the phone keys to answer the call.
4.3 End a call
After finishing the call, press the answer/end key, or use the phone keys to end the call.
4.4 Refuse a call
When there is incoming call, press and hold answer/end button for 3 seconds until you can hear "call rejected".
4.5 Redial the last dialed phone number.
When the BSH330 is in idle state, you can double click the answer/end button to redial the last dialed number and hear "redialing".
4.6 Play/Pause music
Short press answer/end button to play or pause music.

5. LED Indication

Headset status	LED Indication
In idle state after paired	Blue light flashes 1 time every 7 seconds
In coming call	Blue light flashes twice every 2 seconds
Low battery	Red light flashes
Charging	Red light is on
Power on	Blue light flashes 3 times
Power off	Red light flashes 3 times
TWS pairing	Blue and red light flash alternatively
Bluetooth pairing	Blue and red light flash alternatively

6. Tips for TWS Pairing

TWS pairing is a technical term of using the Bluetooth product. Make two Bluetooth enable devices to be in wireless connection. It will be automatically distinguished between left channel and right channel headsets. The left headset is the main one and is to be paired and connected with Bluetooth mobile phone.
After TWS connecting, you can play/pause music through either of the two headsets, but only left (main) headset has call function.
When the TWS headsets are in on state, press and hold answer/end key of either headset for 3 second to power off both headsets. However, when they are in off state, you need to power on them separately at the same time to let them reconnect.
If they are not in TWS connection, you can pair and connect them respectively with Bluetooth mobile phone.

7. Technical Information

Frequency features

Frequency response:	100～10KHZ
Signal to noise ration:	59DB

RF character

Frequency range:	2.402-2.480GHZ
Receiving sensitivity:	−85～−94DBM

Electrical characteristics

Charge input voltage range:	4.75～5.5V
Charger minimum current:	60 MA
Low tension:	3.2V±0.05V
Low tension auto power-off:	3.0V±0.05V
Play music current:	16.84mA±5mA

ISED Statement

English: This device complies with Industry Canada licenseÿexempt RSS standard(s). Operation is subject to the following two conditions: (1) This device may not cause interference, and (2) This device must accept any interference, including interference that may cause undesired operation of the device. The digital apparatus complies with Canadian CAN ICES-3 (B)/NMB-3(B).

French: Le présentappareilestconforme aux CNR d'Industrie Canada applicables aux appareils radio exempts de licence. L'exploitationestautorisée aux deux conditions suivantes: (1) l'appareil ne doit pas produire de brouillage, et (2) l'utilisateur de l'appareildoit accepter tout brouillageradioélectriquesubi, mêmesi le brouillageest susceptible d'encompromettre le fonctionnement.
This radio transmitter (ISED certification number: 21231-TREKKER200) has been approved by Industry Canada to operate with the antenna types listed with the maximum permissible gain indicated. Antenna types not included in this list, having a gain greater than the maximum gain indicated for that type, are strictly prohibited for use with this device.
Le présent émetteur radio (ISED certification number: 21231-TREKKER200) a été approuvé par Industrie Canada pour fonctionner avec les types d'antenne énumérés ci-dessous et ayant un gain admissible maximal. Les types d'antenne non inclus dans cette liste, et dont le gain est supérieur au gain maximal indiqué, sont strictement interdits pour l'exploitation de l'émetteur.

www.microlab-global.com
Microlab Electronics Co., Ltd
Made in China

Disclaimer: All symbols and logo belong to its respective brand holder or registered holder. All specifications and information are subject to changes without further notice. Slight variations and differences might appear between the printed photos and actual product due to product enhancement. © 2017 Microlab Electronics Co., Ltd. All rights reserved.