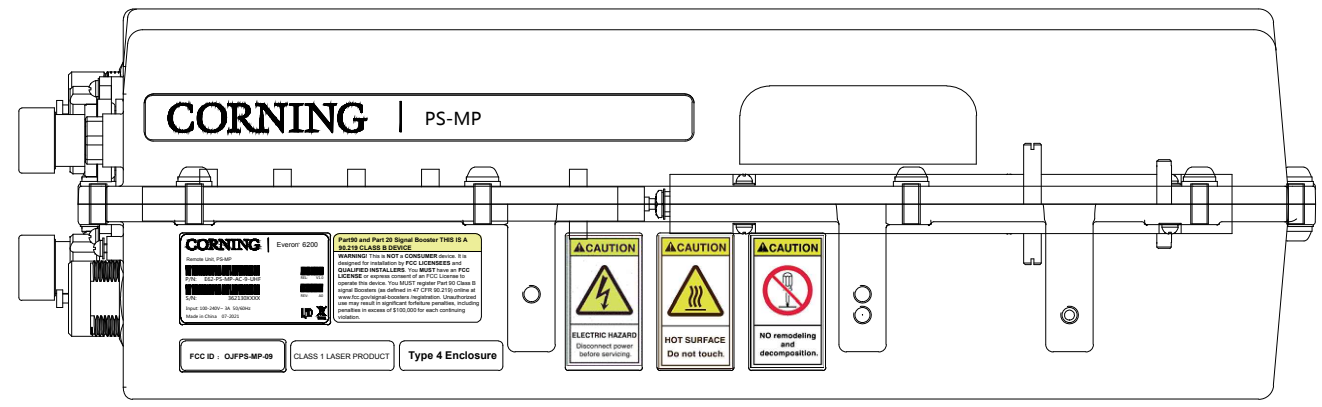
CORNING
PS-MP
CORNING
Everon 6200
Remote Unit, PS-MP
P/N: E62-PS-MP-AC-S-UHF
S/N: 3621230000
Input: 100-240V~ 3A 50/60Hz
Made in China 07-2021
Part90 and Part 20 Signal Booster THIS IS A 36.219 CLASS B DEVICE.
WARNING! This is NOT a CONSUMER device. It is designed for installation by FCC LICENSEES and QUALIFIED INSTALLERS. You MUST have an FCC LICENSE or express consent of an FCC License to operate this device. You MUST register Part 90 Class B signal Boosters (as defined in 47 CFR 90.219) online at www.fcc.gov/signal-boosters /registration. Unauthorized use may result in significant forfeiture penalties, including penalties in excess of $100,000 for each continuing violation.
CAUTION
ELECTRIC HAZARD
Disconnect power before servicing
CAUTION
HOT SURFACE
Do not touch.
CAUTION
NO remodeling and decomposition.
FCC ID : OJFPS-MP-09
CLASS 1 LASER PRODUCT
Type 4 Enclosure

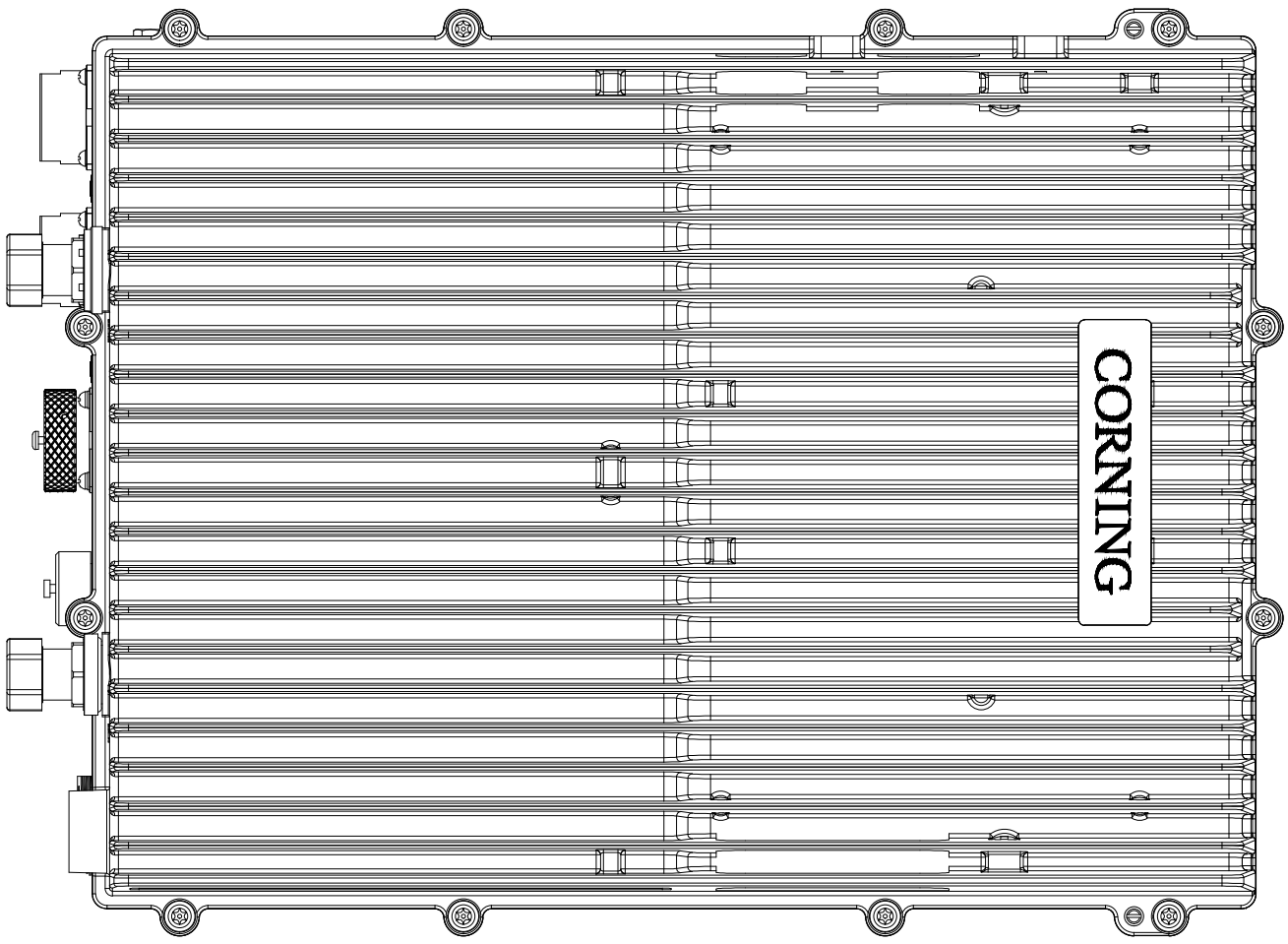
CORNING

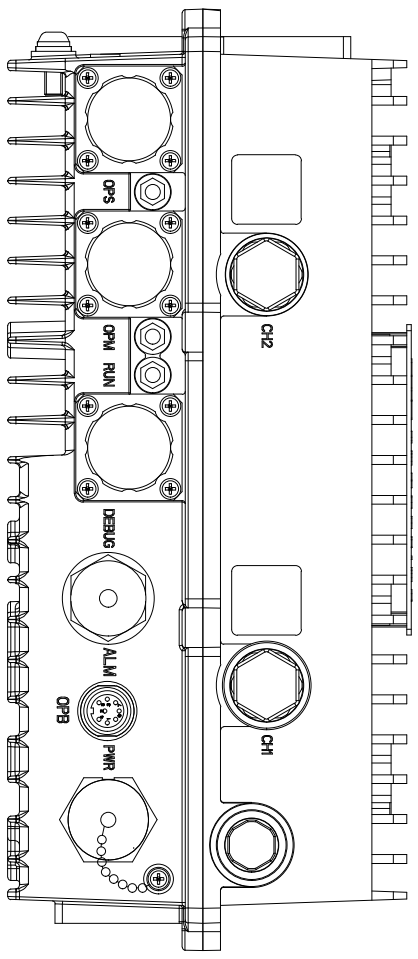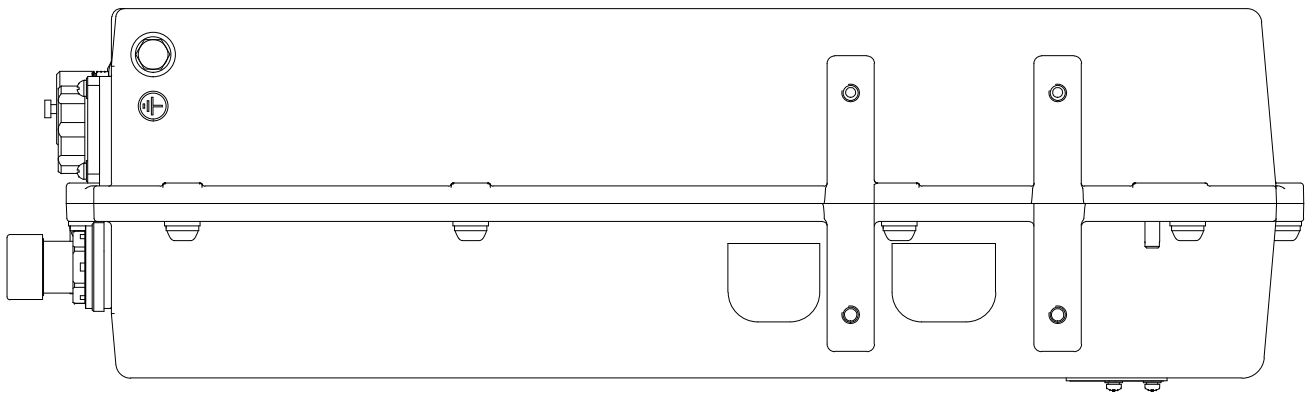
OPS
OPM
RUN
DEBUG
ALM
OPB
PWR
CH2
CH1