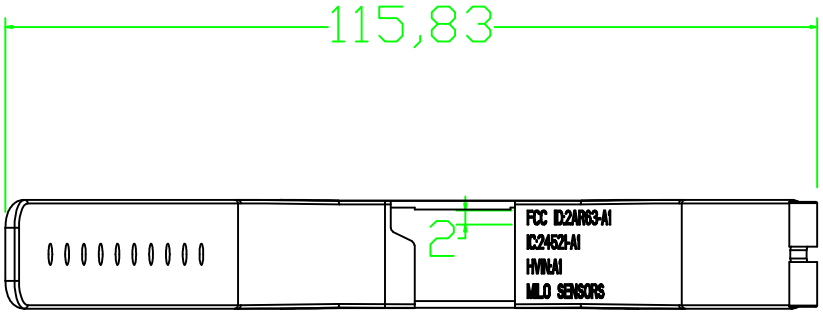

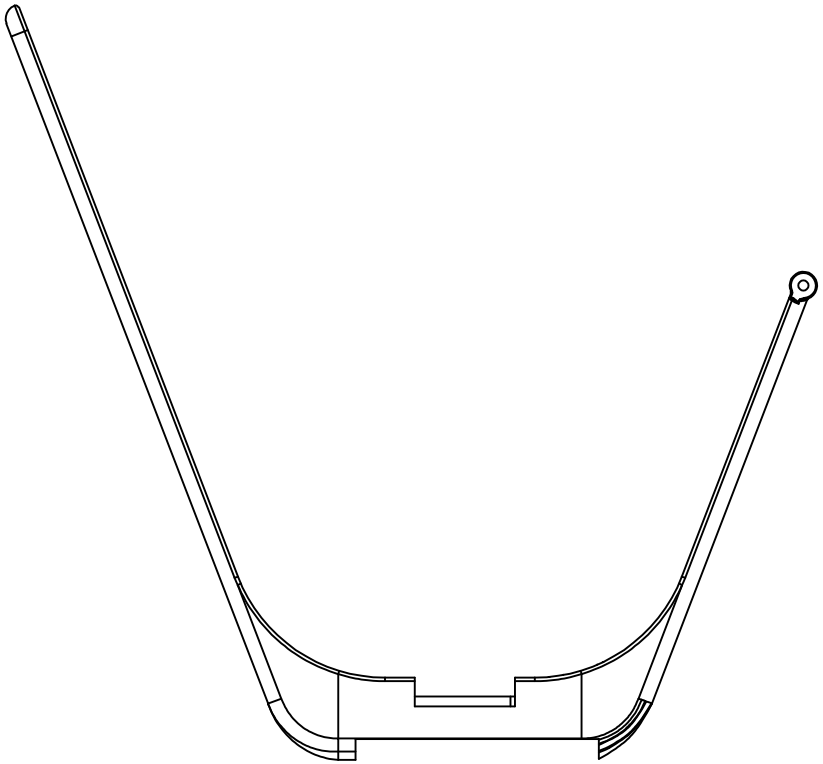

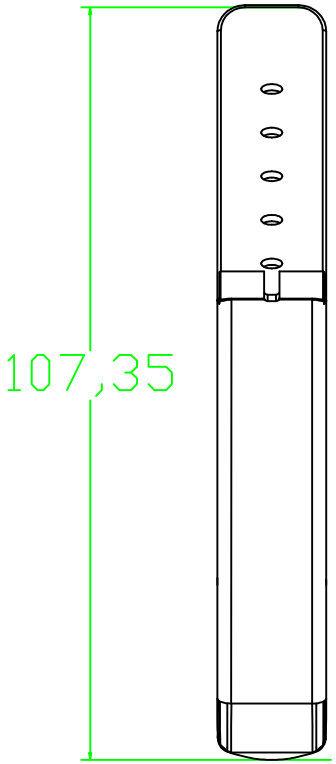

HK Gitel International Industrial Ltd. --- A China based OEM/ODM manufacturer					
Unless otherwise Specified, dim. are in Mini meter:	Usage:			Title: WRISTBAND	
.X ±0.1 .XX ±0.05 .XXX ±0.02	Approved			P/N: Silicone-Wristband	
	Checked	Peter Zhang	Jaue.18th 2019	Scale: None	page 1 of 1
Material: Silicon	DWG:	Keng Zhao	Jaue.18th 2019	Finish:	Rev. C