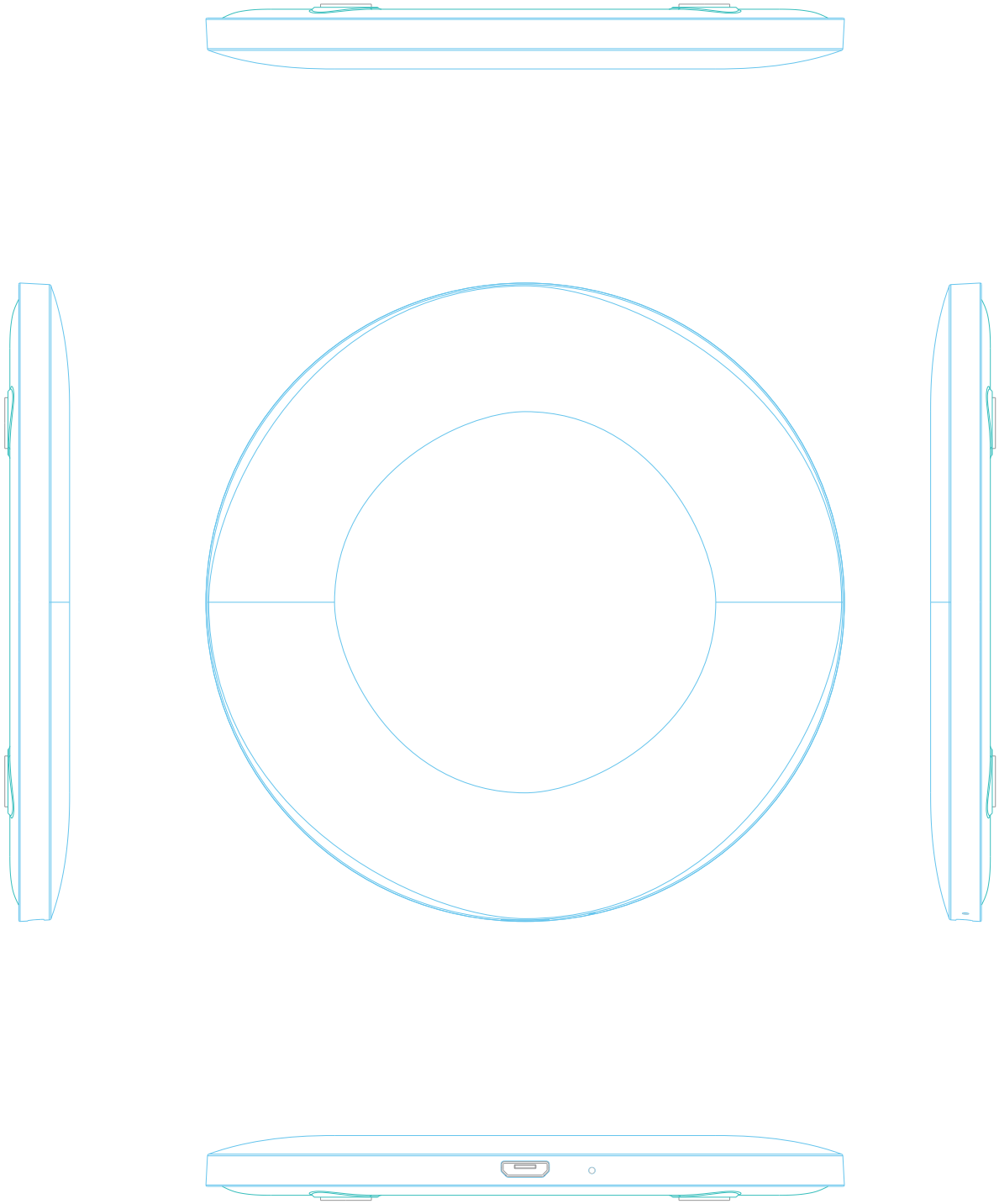
MICRO孔位
31 mm
38.7mm
31 mm
heyday™
Wireless Charging Pad
Model: QIC32
Input: DC 5V/2A, Output: DC 5V/1A
FCC ID: 2AO23QIC32
Made in China
MC: F1118
This device complies with Part 15 of the FCC Rules. Operation is subject to the following two conditions: (1) this device may not cause harmful interference, and (2) this device must accept any interference received, including interference that may cause undesired operation.
15.3 mm
69.90 mm
15.3 mm