2020/12/16

LE-20X530

IT Controller (used 4G/ 3G/ GSM Communication)
JRN-430K
ID Label

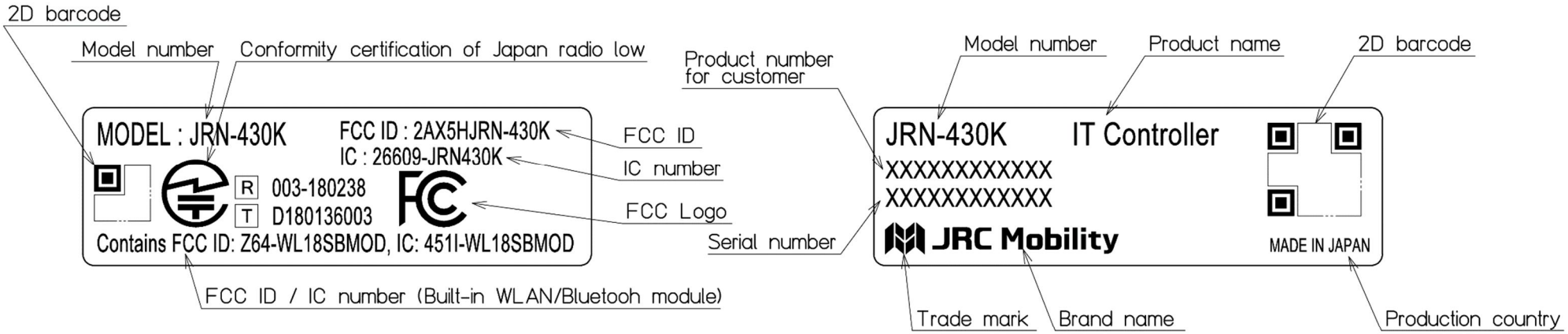

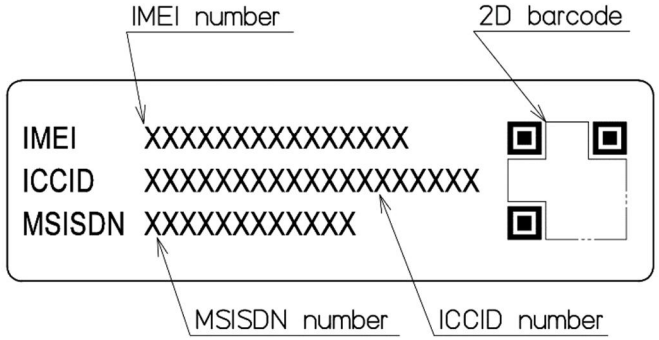

2020/12/15

LE-20X529
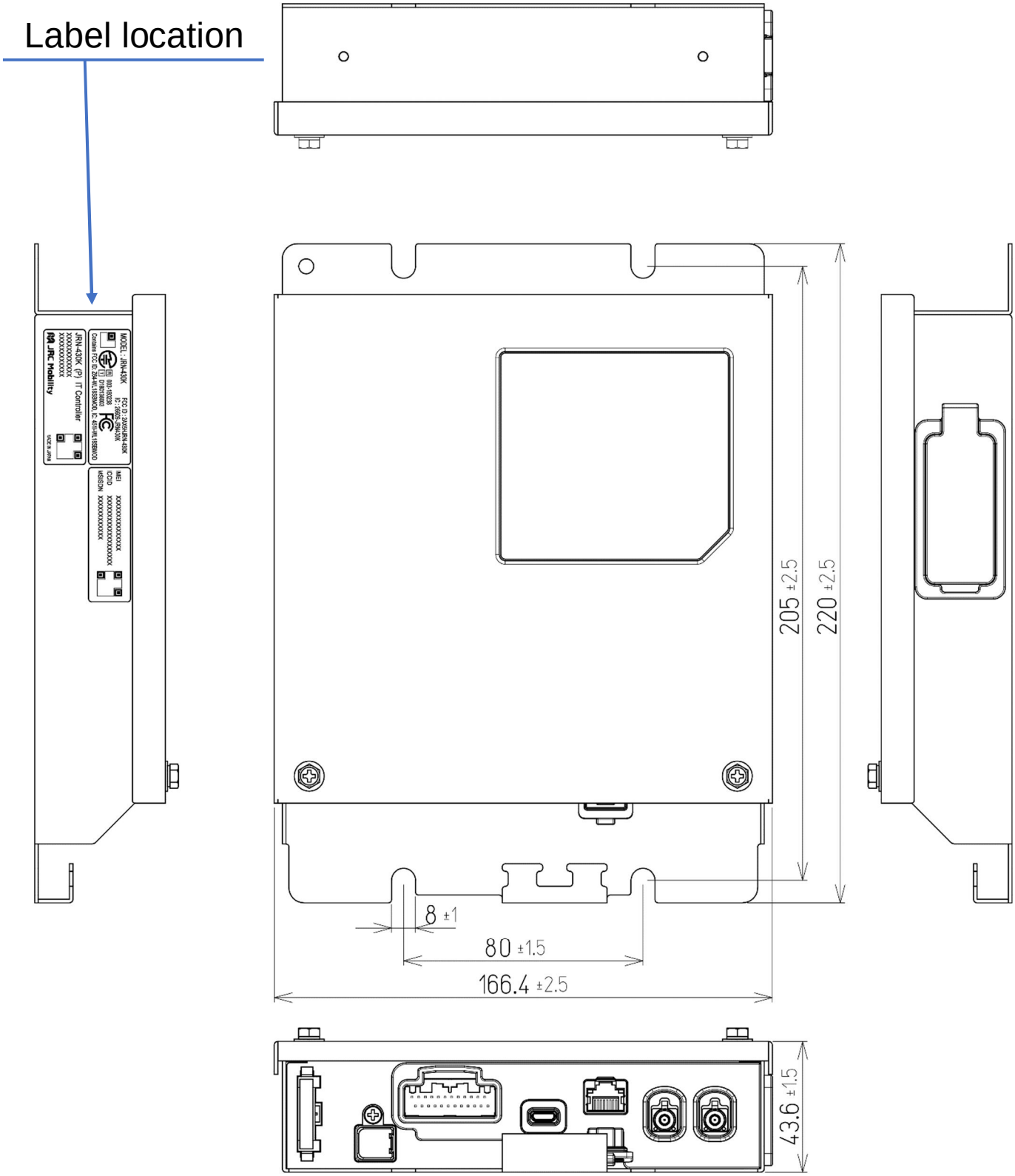
IT Controller (used 4G/ 3G/ GSM Communication)
JRN-430K
Label location