# APPENDIX F: DOWNLINK LTE CA RF CONDUCTED POWERS

## 1.1 LTE Downlink Only Carrier Aggregation Test Reduction Methodology

SAR test exclusion for LTE downlink Carrier Aggregation is determined by power measurements according to the number of component carriers (CCs) supported by the product implementation. Per April 2018 TCBC Workshop Notes, the following test reduction methodology was applied to determine the combinations required for conducted power measurements.

LTE DLCA Test Reduction Methodology:

- The supported combinations were arranged by the number of component carriers in columns.
- Any limitations on the PCC or SCC for each combination were identified alongside the combination (e.g. CA_2A-2A-4A-12A, but B12 can only be configured as a SCC).
- Power measurements were performed for "supersets" (LTE CA combinations with multiple components carriers) and any "subsets" (LTE CA combinations with fewer component carriers) that were not completely covered by the supersets.
- Only subsets that have the exact same components as a superset were excluded for measurement.
- When there were certain restrictions on component carriers that existed in the superset that were not applied for the subset, the subset configuration was additionally evaluated.
- Both inter-band and intra-band downlink carrier aggregation scenarios were considered.
- Downlink CA combinations for SISO and 4x4 Downlink MIMO operations were measured independently, per May 2017 TCBC Workshop notes.

Table 1 – Example of Exclusion Table for SISO Configurations

| Index | 2CC | Supported Channel Bandwidth [MHz] | | Restriction | Completely Covered by Measurement Superset |
|---|---|---|---|---|---|
| | | CC1 | CC2 | | |
| 2CC #1 | CA_2C | 5, 10, 15, 20 | 5, 10, 15, 20 | | 3CC #4 |
| 2CC #2 | CA_2A-5A | 5, 10, 15, 20 | 5, 10 | | 4CC #1 |
| 2CC #3 | CA_2A-12A | 5, 10, 15, 20 | 5, 10 | | 3CC #9 |
| 2CC #4 | CA_2A-13A | 5, 10, 15, 20 | 10 | | 3CC #9 |
| 2CC #5 | CA_2A-17A | 5, 10 | 5, 10 | | No |
| 2CC #6 | CA_2A-30A | 5, 10, 15, 20 | 5, 10 | | 3CC #14 |
| 2CC #8 | CA_2A-66A (2) | 5, 10, 15, 20 | 5, 10, 15, 20 | | 3CC #1 |
| 2CC #9 | CA_2A-71A | 5, 10, 15, 20 | 5, 10, 15, 20 | | 3CC #10 |
| 2CC #10 | CA_4A-4A | 5, 10, 15, 20 | 5, 10, 15, 20 | | 3CC #8 |
| 2CC #11 | CA_4A-5A (1) | 5, 10, 15, 20 | 5, 10 | | 4CC #3 |
| 2CC #12 | CA_4A-12A (4) | 5, 10, 15, 20 | 5, 10 | | 3CC #8 |
| 2CC #13 | CA_4A-13A | 5, 10, 15, 20 | 10 | | 3CC #9 |
| 2CC #14 | CA_4A-17A | 5, 10 | 5, 10 | B17 SCC Only | No |
| 2CC #15 | CA_5B | 5, 10 | 5, 10 | | 3CC #1 |
| 2CC #16 | CA_5A-25A | 5, 10 | 5, 10, 15, 20 | | No |
| 2CC #17 | CA_7C | 15, 20 | 15, 20 | | No |
| 2CC #18 | CA_7A-7A (1) | 5, 10, 15, 20 | 5, 10, 15, 20 | | No |
| 2CC #19 | CA_7A-12A | 5, 10, 15, 20 | 5, 10 | | 3CC #12 |
| 2CC #20 | CA_12B | 5 | 5, 10 | | 3CC #13 |
| 2CC #21 | CA_12A-25A | 5, 10 | 5, 10, 15, 20 | | No |
| 2CC #22 | CA_12A-30A | 5, 10 | 5, 10 | | 3CC #14 |
| 2CC #23 | CA_41A-41A (1) | 5, 10, 15, 20 | 5, 10, 15, 20 | | No |

| Index | 3CC | Supported Channel Bandwidth [MHz] | | | Restriction | Completely Covered by Measurement Superset |
|---|---|---|---|---|---|---|
| | | CC1 | CC2 | CC3 | | |
| 3CC #1 | CA_2A-2A-4A | 5, 10, 15, 20 | 5, 10, 15, 20 | 5, 10, 15, 20 | | 4CC #1 |
| 3CC #2 | CA_2A-2A-5A | 5, 10, 15, 20 | 5, 10, 15, 20 | 5, 10 | | 4CC #1 |
| 3CC #3 | CA_2A-2A-12A | 5, 10, 15, 20 | 5, 10, 15, 20 | 5, 10 | | No |
| 3CC #4 | CA_2C-66A | 5, 10, 15, 20 | 5, 10, 15, 20 | 5, 10, 15, 20 | | No |
| 3CC #5 | CA_2A-2A-71A | 5, 10, 15, 20 | 5, 10, 15, 20 | 5, 10, 15, 20 | | No |
| 3CC #6 | CA_2A-4A-4A | 5, 10, 15, 20 | 5, 10, 15, 20 | 5, 10, 15, 20 | | No |
| 3CC #7 | CA_2A-4A-5A | 5, 10, 15, 20 | 5, 10, 15, 20 | 5, 10 | | 4CC #1 |
| 3CC #8 | CA_2A-4A-12A | 5, 10, 15, 20 | 5, 10, 15, 20 | 5, 10 | | No |
| 3CC #9 | CA_2A-4A-13A | 5, 10, 15, 20 | 5, 10, 15, 20 | 10 | | No |
| 3CC #10 | CA_2A-4A-71A | 5, 10, 15, 20 | 5, 10, 15, 20 | 5, 10, 15, 20 | | No |
| 3CC #11 | CA_2A-5B | 5, 10, 15, 20 | 5, 10 | 5, 10 | | 4CC #3 |
| 3CC #12 | CA_2A-7A-12A | 5, 10, 15, 20 | 5, 10, 15, 20 | 5, 10 | | No |
| 3CC #13 | CA_2A-12B | 5, 10, 15, 20 | 5 | 5, 10 | | No |
| 3CC #14 | CA_2A-12A-30A | 5, 10, 15, 20 | 5, 10 | 5, 10 | | No |
| 3CC #15 | CA_4A-4A-5A | 5, 10, 15, 20 | 5, 10, 15, 20 | 5, 10 | | No |
| 3CC #16 | CA_5B-30A | 5, 10 | 5, 10 | 5, 10 | | 3CC #1 |
| 3CC #17 | CA_5B-66A | 5, 10 | 5, 10 | 5, 10, 15, 20 | | 3CC #1 |
| 3CC #18 | CA_5A-30A-66A | 5, 10 | 5, 10 | 5, 10, 15, 20 | | 3CC #9 |
| 3CC #19 | CA_12A-66C | 5, 10 | 5, 10, 15, 20 | 5, 10, 15, 20 | | No |
| 3CC #20 | CA_30A-66A-66A | 5, 10 | 5, 10, 15, 20 | 5, 10, 15, 20 | | 3CC #9 |
| 3CC #21 | CA_41D | 10, 15, 20 | 10, 15, 20 | 10, 15, 20 | | No |
| 3CC #22 | CA_41A-41C | 5, 10, 15, 20 | 5, 10, 15, 20 | 5, 10, 15, 20 | | No |
| 3CC #23 | CA_66D | 5, 10, 15, 20 | 5, 10, 15, 20 | 5, 10, 15, 20 | | No |
| 3CC #24 | CA_66A-66C | 5, 10, 15, 20 | 5, 10, 15, 20 | 5, 10, 15, 20 | | No |

| Index | 4CC | Supported Channel Bandwidth [MHz] | | | | Restriction | Completely Covered by Measurement Superset |
|---|---|---|---|---|---|---|---|
| | | CC1 | CC2 | CC3 | CC4 | | |
| 4CC #1 | CA_2A-2A-4A-5A | 5, 10, 15, 20 | 5, 10, 15, 20 | 5, 10, 15, 20 | 5, 10 | | No |
| 4CC #2 | CA_2A-2A-4A-12A | 5, 10, 15, 20 | 5, 10, 15, 20 | 5, 10, 15, 20 | 5, 10 | B12 SCC Only | No |
| 4CC #3 | CA_2A-2A-5A-30A | 5, 10, 15, 20 | 5, 10, 15, 20 | 5, 10 | 5, 10 | | No |
| 4CC #4 | CA_2A-2A-5A-66A | 5, 10, 15, 20 | 5, 10, 15, 20 | 5, 10 | 5, 10, 15, 20 | | No |
| 4CC #5 | CA_2A-5B-30A | 5, 10, 15, 20 | 5, 10 | 5, 10 | 5, 10 | | 3CC #1 |
| 4CC #6 | CA_2A-5B-66A | 5, 10, 15, 20 | 5, 10 | 5, 10 | 5, 10, 15, 20 | | 3CC #1 |
| 4CC #7 | CA_5B-30A-66A | 5, 10 | 5, 10 | 5, 10 | 5, 10 | | 3CC #1 |
| 4CC #8 | CA_5B-66A-66A | 5, 10 | 5, 10 | 5, 10, 15, 20 | 5, 10, 15, 20 | | 3CC #2 |
| 4CC #9 | CA_5A-30A-66A-66A | 5, 10 | 5, 10 | 5, 10, 15, 20 | 5, 10, 15, 20 | | No |
| 4CC #10 | CA_41E | 15, 20 | 15, 20 | 15, 20 | 20 | | No |

| Index | 5CC | Supported Channel Bandwidth [MHz] | | | | | Restriction | Completely Covered by Measurement Superset |
|---|---|---|---|---|---|---|---|---|
| | | CC1 | CC2 | CC3 | CC4 | CC5 | | |
| 5CC #1 | CA_2A-5B-30A-66A | 5, 10, 15, 20 | 5, 10 | 5, 10 | 5, 10 | 5, 10, 15, 20 | | No |
| 5CC #2 | CA_2A-5B-66A-66A | 5, 10, 15, 20 | 5, 10 | 5, 10 | 5, 10, 15, 20 | 5, 10, 15, 20 | | No |

Table 2 – Example of Exclusion Table for 4x4 Downlink MIMO Configurations

| Index | 2CC | Supported Channel Bandwidth [MHz] | | Restriction | Completely Covered by Measurement Superset |
|---|---|---|---|---|---|
| | | CC1 | CC2 | | |
| 2CC #M1 | CA_[2C] | 5, 10, 15, 20 | 5, 10, 15, 20 | | 3CC #M6 |
| 2CC #M2 | CA_[2A]-2A | 5, 10, 15, 20 | 5, 10, 15, 20 | | 3CC #M1 |
| 2CC #M3 | CA_[2A]-[2A] | 5, 10, 15, 20 | 5, 10, 15, 20 | | No |
| 2CC #M4 | CA_[2A]-4A (2) | 5, 10, 15, 20 | 5, 10, 15, 20 | | 3CC #M1 |
| 2CC #M5 | CA_[2A]-[4A] (2) | 5, 10, 15, 20 | 5, 10, 15, 20 | | No |
| 2CC #M6 | CA_[2A]-5A | 5, 10, 15, 20 | 5, 10 | | 4CC #M3 |
| 2CC #M7 | CA_[2A]-12A (1) | 5, 10, 15, 20 | 3, 5, 10 | | No |
| 2CC #M8 | CA_[2A]-13A | 5, 10, 15, 20 | 10 | | 3CC #M4 |
| 2CC #M9 | CA_[2A]-17A | 5, 10 | 5, 10 | | No |
| 2CC #M10 | CA_[2A]-29A (2) | 5, 10, 15, 20 | 5, 10 | B29 SCC Only | 3CC #M12 |
| 2CC #M11 | CA_[2A]-30A | 5, 10, 15, 20 | 5, 10 | | 3CC #M5 |
| 2CC #M12 | CA_[2A]-66A (2) | 5, 10, 15, 20 | 5, 10, 15, 20 | | 4CC #M1 |
| 2CC #M13 | CA_2A-[66A] (2) | 5, 10, 15, 20 | 5, 10, 15, 20 | | 4CC #M2 |
| 2CC #M14 | CA_[2A]-[66A] (2) | 5, 10, 15, 20 | 5, 10, 15, 20 | | No |
| 2CC #M15 | CA_[2A]-71A | 5, 10, 15, 20 | 5, 10, 15, 20 | | 3CC #M11 |
| 2CC #M16 | CA_5A-[66A] | 5, 10 | 5, 10, 15, 20 | | 3CC #M16 |
| 2CC #M17 | CA_12A-[66A] (4) | 5, 10 | 5, 10, 15, 20 | | 3CC #M17 |
| 2CC #M18 | CA_13A-[66A] | 5, 10 | 5, 10, 15, 20 | | 3CC #M19 |
| 2CC #M19 | CA_30A-[66A] | 5, 10 | 5, 10, 15, 20 | | 3CC #M20 |
| 2CC #M20 | CA_[66B] | 5, 10, 15 | 5, 10, 15 | | 4CC #M4 |
| 2CC #M21 | CA_[66C] | 5, 10, 15, 20 | 5, 10, 15, 20 | | 4CC #M6 |
| 2CC #M22 | CA_[66A]-66A | 5, 10, 15, 20 | 5, 10, 15, 20 | | 3CC #M28 |
| 2CC #M23 | CA_[66A]-[66A] | 5, 10, 15, 20 | 5, 10, 15, 20 | | No |

| Index | 3CC | Supported Channel Bandwidth [MHz] | | | Restriction | Completely Covered by Measurement Superset |
|---|---|---|---|---|---|---|
| | | CC1 | CC2 | CC3 | | |
| 3CC #M1 | CA_[2A]-2A-4A | 5, 10, 15, 20 | 5, 10, 15, 20 | 5, 10, 15, 20 | | No |
| 3CC #M2 | CA_[2A]-2A-5A | 5, 10, 15, 20 | 5, 10, 15, 20 | 5, 10 | | No |
| 3CC #M3 | CA_[2A]-2A-12A | 5, 10, 15, 20 | 5, 10, 15, 20 | 5, 10 | | No |
| 3CC #M4 | CA_[2A]-2A-13A | 5, 10, 15, 20 | 5, 10, 15, 20 | 10 | | No |
| 3CC #M5 | CA_[2A]-2A-30A | 5, 10, 15, 20 | 5, 10, 15, 20 | 5, 10 | | No |
| 3CC #M6 | CA_[2C]-66A | 5, 10, 15, 20 | 5, 10, 15, 20 | 5, 10, 15, 20 | | No |
| 3CC #M7 | CA_2C-[66A] | 5, 10, 15, 20 | 5, 10, 15, 20 | 5, 10, 15, 20 | | No |
| 3CC #M8 | CA_[2C]-[66A] | 5, 10, 15, 20 | 5, 10, 15, 20 | 5, 10, 15, 20 | | No |
| 3CC #M9 | CA_[2A]-2A-66A | 5, 10, 15, 20 | 5, 10, 15, 20 | 5, 10, 15, 20 | | No |
| 3CC #M10 | CA_2A-2A-[66A] | 5, 10, 15, 20 | 5, 10, 15, 20 | 5, 10, 15, 20 | | No |
| 3CC #M11 | CA_[2A]-2A-71A | 5, 10, 15, 20 | 5, 10, 15, 20 | 5, 10, 15, 20 | | No |
| 3CC #M12 | CA_[2A]-4A-29A | 5, 10, 15, 20 | 5, 10, 15, 20 | 5, 10 | B29 SCC Only | No |
| 3CC #M13 | CA_[2A]-4A-71A | 5, 10, 15, 20 | 5, 10, 15, 20 | 5, 10, 15, 20 | | No |
| 3CC #M14 | CA_[2A]-5B | 5, 10, 15, 20 | 5, 10 | 5, 10 | | 4CC #M1 |
| 3CC #M15 | CA_[2A]-5A-66A | 5, 10, 15, 20 | 5, 10 | 5, 10, 15, 20 | | No |
| 3CC #M16 | CA_2A-5A-[66A] | 5, 10, 15, 20 | 5, 10 | 5, 10, 15, 20 | | No |
| 3CC #M17 | CA_2A-12A-[66A] | 5, 10, 15, 20 | 5, 10 | 5, 10, 15, 20 | | No |
| 3CC #M18 | CA_[2A]-13A-66A | 5, 10, 15, 20 | 5, 10 | 5, 10, 15, 20 | | No |
| 3CC #M19 | CA_2A-13A-[66A] | 5, 10, 15, 20 | 5, 10 | 5, 10, 15, 20 | | No |
| 3CC #M20 | CA_2A-30A-[66A] | 5, 10, 15, 20 | 5, 10 | 5, 10, 15, 20 | | No |
| 3CC #M21 | CA_[2A]-66B | 5, 10, 15, 20 | 5, 10, 15 | 5, 10, 15 | | 4CC #M3 |
| 3CC #M22 | CA_2A-[66B] | 5, 10, 15, 20 | 5, 10, 15 | 5, 10, 15 | | 4CC #M4 |
| 3CC #M23 | CA_[2A]-[66B] | 5, 10, 15, 20 | 5, 10, 15 | 5, 10, 15 | | No |
| 3CC #M24 | CA_[2A]-66C | 5, 10, 15, 20 | 5, 10, 15, 20 | 5, 10, 15, 20 | | 4CC #M5 |
| 3CC #M25 | CA_2A-[66C] | 5, 10, 15, 20 | 5, 10, 15, 20 | 5, 10, 15, 20 | | 4CC #M6 |
| 3CC #M26 | CA_[2A]-[66C] | 5, 10, 15, 20 | 5, 10, 15, 20 | 5, 10, 15, 20 | | No |
| 3CC #M27 | CA_[2A]-66A-66A | 5, 10, 15, 20 | 5, 10, 15, 20 | 5, 10, 15, 20 | | No |
| 3CC #M28 | CA_2A-[66A]-66A | 5, 10, 15, 20 | 5, 10, 15, 20 | 5, 10, 15, 20 | | No |
| 3CC #M29 | CA_[2A]-66A-71A | 5, 10, 15, 20 | 5, 10, 15, 20 | 5, 10, 15, 20 | | No |

| Index | 4CC | Supported Channel Bandwidth [MHz] | | | | Restriction | Completely Covered by Measurement Superset |
|---|---|---|---|---|---|---|---|
| | | CC1 | CC2 | CC3 | CC4 | | |
| 4CC #M1 | CA_[2A]-5B-66A | 5, 10, 15, 20 | 5, 10 | 5, 10 | 5, 10, 15, 20 | | No |
| 4CC #M2 | CA_2A-5B-[66A] | 5, 10, 15, 20 | 5, 10 | 5, 10 | 5, 10, 15, 20 | | No |
| 4CC #M3 | CA_[2A]-5A-66B | 5, 10, 15, 20 | 5, 10 | 5, 10, 15 | 5, 10, 15 | | No |
| 4CC #M4 | CA_2A-5A-[66B] | 5, 10, 15, 20 | 5, 10 | 5, 10, 15 | 5, 10, 15 | | No |
| 4CC #M5 | CA_[2A]-5A-66C | 5, 10, 15, 20 | 5, 10 | 5, 10, 15, 20 | 5, 10, 15, 20 | | No |
| 4CC #M6 | CA_2A-5A-[66C] | 5, 10, 15, 20 | 5, 10 | 5, 10, 15, 20 | 5, 10, 15, 20 | | No |

Note: [CC] indicates component carrier with 4x4 DL MIMO antenna configuration



© 2020 PCTEST

## 1.2 LTE Downlink Only Carrier Aggregation Test Selection and Setup

SAR test exclusion for LTE downlink Carrier Aggregation is determined by power measurements according to the number component carriers (CCs) supported by the product implementation. For those configurations required by April 2018 TCBC Workshop Notes, conducted power measurements with LTE Carrier Aggregation (CA) (downlink only) active are made in accordance to KDB Publication 941225 D05Av01r02. The RRC connection is only handled by one cell, the primary component carrier (PCC) for downlink and uplink communications. After making a data connection to the PCC, the UE device adds secondary component carrier(s) (SCC) on the downlink only. All uplink communications and acknowledgements remain identical to specifications when downlink carrier aggregation is inactive on the PCC. Additional conducted output powers are measured with the downlink carrier aggregation active for the configuration with highest measured maximum conducted power with downlink carrier aggregation inactive measured among the channel bandwidth, modulation, and RB combinations in each frequency band.

This device supports LAA with downlink carrier aggregation only. It uses carrier aggregation in the downlink to combine LTE in the unlicensed spectrum (i.e. LTE Band 46) with LTE in the licensed band (served as PCC). All uplink communications and acknowledgements on the PCC remain identical to specifications when downlink carrier aggregation is inactive.

Per FCC KDB Publication 941225 D05Av01r02, no SAR measurements are required for carrier aggregation configurations when the maximum average output power with downlink only carrier aggregation active is not more than 0.25 dB higher than the average output power with downlink only carrier aggregation inactive. All bands required for SAR testing per FCC KDB procedures were considered. Based on the measured maximum powers below, no additional SAR tests were required for DLCA SAR configurations.

General PCC and SCC configuration selection procedure

- PCC uplink channel, channel bandwidth, modulation and RB configurations were selected based on section C)3)b)ii) of KDB 941225 D05 V01r02. The downlink PCC channel was paired with the selected PCC uplink channel according to normal configurations without carrier aggregation.
- To maximize aggregated bandwidth, highest channel bandwidth available for that CA combination was selected for SCC. For inter-band CA, the SCC downlink channels were selected near the middle of their transmission bands. For contiguous intra-band CA, the downlink channel spacing between the component carriers was set to multiple of 300 kHz less than the nominal channel spacing defined in section 5.4.1A of 3GPP TS 36.521. For non-contiguous intra-band CA, the downlink channel spacing between the component carriers was set to be larger than the nominal channel spacing and provided maximum separation between the component carriers.
- All selected PCC and SCC(s) remained fully within the uplink/downlink transmission band of the respective component carrier.

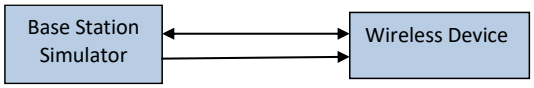


**Figure 1**
**DL CA Power Measurement Setup**


© 2020 PCTEST

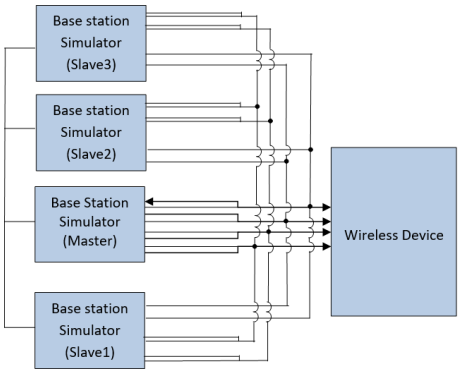


**Figure 2**
**DL CA with DL 4x4 MIMO Power Measurement Setup**

## 1.3 Downlink Carrier Aggregation RF Conducted Powers

### 1.3.1 LTE Band 71 as PCC

**Table 1**
**Maximum Output Powers**

| | PCC | | | | | | | | | SCC 1 | | | | SCC 2 | | | | SCC 3 | | | | Power | |
|---|---|---|---|---|---|---|---|---|---|---|---|---|---|---|---|---|---|---|---|---|---|---|---|
| Combination | PCC Band | PCC BW [MHz] | PCC (UL) Ch. | PCC (UL) Freq. [MHz] | Mod. | PCC UL# RB | PCC UL RB Offset | PCC (DL) Channel | PCC (DL) Freq. [MHz] | SCC Band | SCC BW [MHz] | SCC (DL) Channel | SCC (DL) Freq. [MHz] | SCC Band | SCC BW [MHz] | SCC (DL) Channel | SCC (DL) Freq. [MHz] | SCC Band | SCC BW [MHz] | SCC (DL) Channel | SCC (DL) Freq. [MHz] | LTE Tx.Power with DL CA Enabled (dBm) | LTE Single Carrier Tx Power (dBm) |
| CA_4A-4A-71A | LTE B71 | 15 | 133297 | 680.5 | QPSK | 1 | 74 | 68761 | 634.5 | LTE B4 | 20 | 2175 | 2132.5 | LTE B4 | 10 | 2350 | 2150 | - | - | - | - | 25.21 | 25.10 |
| CA_48A-48A-71A | LTE B71 | 15 | 133297 | 680.5 | QPSK | 1 | 74 | 68761 | 634.5 | LTE B48 | 20 | 55990 | 3625 | LTE B48 | 20 | 56640 | 3690 | - | - | - | - | 25.03 | 25.10 |
| CA_48C-71A | LTE B71 | 15 | 133297 | 680.5 | QPSK | 1 | 74 | 68761 | 634.5 | LTE B48 | 20 | 55990 | 3625 | LTE B48 | 20 | 56188 | 3644.8 | - | - | - | - | 25.00 | 25.10 |
| CA_2A-2A-4A-71A | LTE B71 | 15 | 133297 | 680.5 | QPSK | 1 | 74 | 68761 | 634.5 | LTE B2 | 20 | 900 | 1960 | LTE B2 | 20 | 700 | 1940 | LTE B4 | 20 | 2175 | 2132.5 | 25.20 | 25.10 |
| CA_2A-2A-66A-71A | LTE B71 | 15 | 133297 | 680.5 | QPSK | 1 | 74 | 68761 | 634.5 | LTE B2 | 20 | 900 | 1960 | LTE B2 | 20 | 700 | 1940 | LTE B66 | 20 | 66786 | 2145 | 25.16 | 25.10 |
| CA_2A-66A-66A-71A | LTE B71 | 15 | 133297 | 680.5 | QPSK | 1 | 74 | 68761 | 634.5 | LTE B2 | 20 | 900 | 1960 | LTE B66 | 20 | 66786 | 2145 | LTE B66 | 20 | 67236 | 2190 | 25.12 | 25.10 |
| CA_2A-66C-71A | LTE B71 | 15 | 133297 | 680.5 | QPSK | 1 | 74 | 68761 | 634.5 | LTE B2 | 20 | 900 | 1960 | LTE B66 | 20 | 66786 | 2145 | LTE B66 | 20 | 66984 | 2164.8 | 25.21 | 25.10 |

### 1.3.2 LTE Band 12 as PCC

**Table 2**
**Maximum Output Powers**

| | PCC | | | | | | | | | SCC 1 | | | | SCC 2 | | | | SCC 3 | | | | SCC 4 | | | | Power | |
|---|---|---|---|---|---|---|---|---|---|---|---|---|---|---|---|---|---|---|---|---|---|---|---|---|---|---|---|
| Combination | PCC Band | PCC BW [MHz] | PCC (UL) Ch. | PCC (UL) Freq. [MHz] | Mod. | PCC UL# RB | PCC UL RB Offset | PCC (DL) Channel | PCC (DL) Freq. [MHz] | SCC Band | SCC BW [MHz] | SCC (DL) Channel | SCC (DL) Freq. [MHz] | SCC Band | SCC BW [MHz] | SCC (DL) Channel | SCC (DL) Freq. [MHz] | SCC Band | SCC BW [MHz] | SCC (DL) Channel | SCC (DL) Freq. [MHz] | SCC Band | SCC BW [MHz] | SCC (DL) Channel | SCC (DL) Freq. [MHz] | LTE Tx.Power with DL CA Enabled (dBm) | LTE Single Carrier Tx Power (dBm) |
| CA_2A-12A (1) | LTE B12 | 10 | 23095 | 707.5 | QPSK | 1 | 25 | 5095 | 737.5 | LTE B2 | 20 | 900 | 1960 | - | - | - | - | - | - | - | - | - | - | - | - | 25.12 | 25.16 |
| CA_4A-12A (1) | LTE B12 | 10 | 23095 | 707.5 | QPSK | 1 | 25 | 5095 | 737.5 | LTE B4 | 20 | 2175 | 2132.5 | - | - | - | - | - | - | - | - | - | - | - | - | 25.16 | 25.16 |
| CA_4A-12A (2) | LTE B12 | 10 | 23095 | 707.5 | QPSK | 1 | 25 | 5095 | 737.5 | LTE B4 | 20 | 2175 | 2132.5 | - | - | - | - | - | - | - | - | - | - | - | - | 25.16 | 25.16 |
| CA_12A-25A | LTE B12 | 10 | 23095 | 707.5 | QPSK | 1 | 25 | 5095 | 737.5 | LTE B25 | 20 | 8365 | 1962.5 | - | - | - | - | - | - | - | - | - | - | - | - | 25.11 | 25.16 |
| CA_12A-46A | LTE B12 | 10 | 23095 | 707.5 | QPSK | 1 | 25 | 5095 | 737.5 | LTE B46 | 20 | 50665 | 5537.5 | - | - | - | - | - | - | - | - | - | - | - | - | 25.28 | 25.16 |
| CA_12A-66A (1) | LTE B12 | 10 | 23095 | 707.5 | QPSK | 1 | 25 | 5095 | 737.5 | LTE B66 | 20 | 66786 | 2145 | - | - | - | - | - | - | - | - | - | - | - | - | 25.15 | 25.16 |
| CA_12A-66A (2) | LTE B12 | 10 | 23095 | 707.5 | QPSK | 1 | 25 | 5095 | 737.5 | LTE B66 | 20 | 66786 | 2145 | - | - | - | - | - | - | - | - | - | - | - | - | 25.15 | 25.16 |
| CA_12A-46C | LTE B12 | 10 | 23095 | 707.5 | QPSK | 1 | 25 | 5095 | 737.5 | LTE B46 | 20 | 50665 | 5537.5 | LTE B46 | 20 | 50467 | 5517.7 | - | - | - | - | - | - | - | - | 25.27 | 25.16 |
| CA_2A-2A-4A-12A | LTE B12 | 10 | 23095 | 707.5 | QPSK | 1 | 25 | 5095 | 737.5 | LTE B2 | 20 | 900 | 1960 | LTE B2 | 20 | 700 | 1940 | LTE B4 | 20 | 2175 | 2132.5 | - | - | - | - | 25.12 | 25.16 |
| CA_2A-4A-4A-12A | LTE B12 | 10 | 23095 | 707.5 | QPSK | 1 | 25 | 5095 | 737.5 | LTE B2 | 20 | 900 | 1960 | LTE B4 | 20 | 2175 | 2132.5 | LTE B4 | 10 | 2350 | 2150 | - | - | - | - | 25.19 | 25.16 |
| CA_2A-4A-12B | LTE B12 | 5 | 23095 | 707.5 | QPSK | 1 | 12 | 5095 | 737.5 | LTE B12 | 5 | 5047 | 732.7 | LTE B2 | 20 | 900 | 1960 | LTE B4 | 20 | 2175 | 2132.5 | - | - | - | - | 25.22 | 25.07 |
| CA_2A-12A-66C | LTE B12 | 10 | 23095 | 707.5 | QPSK | 1 | 25 | 5095 | 737.5 | LTE B2 | 20 | 900 | 1960 | LTE B66 | 20 | 66786 | 2145 | LTE B66 | 20 | 66984 | 2164.8 | - | - | - | - | 25.13 | 25.16 |
| CA_4A-4A-12B | LTE B12 | 5 | 23095 | 707.5 | QPSK | 1 | 12 | 5095 | 737.5 | LTE B12 | 5 | 5047 | 732.7 | LTE B4 | 20 | 2175 | 2132.5 | LTE B4 | 10 | 2350 | 2150 | - | - | - | - | 25.21 | 25.07 |
| CA_12A-46D | LTE B12 | 10 | 23095 | 707.5 | QPSK | 1 | 25 | 5095 | 737.5 | LTE B46 | 20 | 50665 | 5537.5 | LTE B46 | 20 | 50467 | 5517.7 | LTE B46 | 20 | 50863 | 5557.3 | - | - | - | - | 25.25 | 25.16 |
| CA_2A-2A-12A-30A-66A | LTE B12 | 10 | 23095 | 707.5 | QPSK | 1 | 25 | 5095 | 737.5 | LTE B2 | 20 | 900 | 1960 | LTE B2 | 20 | 700 | 1940 | LTE B30 | 10 | 9820 | 2355 | LTE B66 | 20 | 66786 | 2145 | 25.19 | 25.16 |
| CA_2A-2A-12A-66A-66A | LTE B12 | 10 | 23095 | 707.5 | QPSK | 1 | 25 | 5095 | 737.5 | LTE B2 | 20 | 900 | 1960 | LTE B2 | 20 | 700 | 1940 | LTE B66 | 20 | 66786 | 2145 | LTE B66 | 20 | 67236 | 2190 | 25.21 | 25.16 |
| CA_2A-2A-12B-66A | LTE B12 | 5 | 23095 | 707.5 | QPSK | 1 | 12 | 5095 | 737.5 | LTE B12 | 5 | 5047 | 732.7 | LTE B2 | 20 | 900 | 1960 | LTE B2 | 20 | 700 | 1940 | LTE B66 | 20 | 66786 | 2145 | 25.18 | 25.07 |
| CA_2A-12A-30A-66A-66A | LTE B12 | 10 | 23095 | 707.5 | QPSK | 1 | 25 | 5095 | 737.5 | LTE B2 | 20 | 900 | 1960 | LTE B30 | 10 | 9820 | 2355 | LTE B66 | 20 | 66786 | 2145 | LTE B66 | 20 | 67236 | 2190 | 25.22 | 25.16 |
| CA_2A-12B-66A-66A | LTE B12 | 5 | 23095 | 707.5 | QPSK | 1 | 12 | 5095 | 737.5 | LTE B12 | 5 | 5047 | 732.7 | LTE B2 | 20 | 900 | 1960 | LTE B66 | 20 | 66786 | 2145 | LTE B66 | 20 | 67236 | 2190 | 25.16 | 25.07 |


© 2020 PCTEST

## 1.3.3 LTE Band 13 as PCC

**Table 3**
**Maximum Output Powers**

| | PCC | | | | | | | | | SCC 1 | | | | | SCC 2 | | | | | SCC 3 | | | | | SCC 4 | | | | | SCC 5 | | | | | SCC 6 | | | | Power | |
|---|---|---|---|---|---|---|---|---|---|---|---|---|---|---|---|---|---|---|---|---|---|---|---|---|---|---|---|---|---|---|---|---|---|---|---|---|---|---|---|---|
| Combination | PCC Band | PCC BW [MHz] | PCC (UL) Ch. | PCC (UL) Freq. [MHz] | Mod. | PCC UL# RB | PCC UL RB Offset | PCC (DL) Channel | PCC (DL) Freq. [MHz] | SCC Band | SCC BW [MHz] | SCC (DL) Channel | SCC (DL) Freq. [MHz] | SCC Band | SCC BW [MHz] | SCC (DL) Channel | SCC (DL) Freq. [MHz] | SCC Band | SCC BW [MHz] | SCC (DL) Channel | SCC (DL) Freq. [MHz] | SCC Band | SCC BW [MHz] | SCC (DL) Channel | SCC (DL) Freq. [MHz] | SCC Band | SCC BW [MHz] | SCC (DL) Channel | SCC (DL) Freq. [MHz] | SCC Band | SCC BW [MHz] | SCC (DL) Channel | SCC (DL) Freq. [MHz] | SCC Band | SCC BW [MHz] | SCC (DL) Channel | SCC (DL) Freq. [MHz] | LTE Tx.Power with DL CA Enabled (dBm) | LTE Single Carrier Tx Power (dBm) |
| CA_2A-4A-13A | LTE B13 | 10 | 23230 | 782 | QPSK | 1 | 49 | 5230 | 751 | LTE B2 | 20 | 900 | 1960 | LTE B4 | 20 | 2175 | 2132.5 | - | - | - | - | - | - | - | - | - | - | - | - | - | - | - | - | - | - | - | - | 25.34 | 25.16 |
| CA_2A-13A-46A | LTE B13 | 10 | 23230 | 782 | QPSK | 1 | 49 | 5230 | 751 | LTE B2 | 20 | 900 | 1960 | LTE B46 | 20 | 50665 | 5537.5 | - | - | - | - | - | - | - | - | - | - | - | - | - | - | - | - | - | - | - | - | 25.36 | 25.16 |
| CA_4A-46A-13A | LTE B13 | 10 | 23230 | 782 | QPSK | 1 | 49 | 5230 | 751 | LTE B4 | 20 | 2175 | 2132.5 | LTE B4 | 10 | 2350 | 2150 | - | - | - | - | - | - | - | - | - | - | - | - | - | - | - | - | - | - | - | - | 25.34 | 25.16 |
| CA_13A-46A-66A | LTE B13 | 10 | 23230 | 782 | QPSK | 1 | 49 | 5230 | 751 | LTE B46 | 20 | 50665 | 5537.5 | LTE B66 | 20 | 66786 | 2145 | - | - | - | - | - | - | - | - | - | - | - | - | - | - | - | - | - | - | - | - | 25.32 | 25.16 |
| CA_2A-13A-46C | LTE B13 | 10 | 23230 | 782 | QPSK | 1 | 49 | 5230 | 751 | LTE B2 | 20 | 900 | 1960 | LTE B46 | 20 | 50665 | 5537.5 | LTE B46 | 20 | 50467 | 5517.7 | - | - | - | - | - | - | - | - | - | - | - | - | - | - | - | - | 25.34 | 25.16 |
| CA_2A-13A-66C | LTE B13 | 10 | 23230 | 782 | QPSK | 1 | 49 | 5230 | 751 | LTE B2 | 20 | 900 | 1960 | LTE B66 | 20 | 66786 | 2145 | LTE B66 | 20 | 66984 | 2164.8 | - | - | - | - | - | - | - | - | - | - | - | - | - | - | - | - | 25.34 | 25.16 |
| CA_13A-46C-66A | LTE B13 | 10 | 23230 | 782 | QPSK | 1 | 49 | 5230 | 751 | LTE B46 | 20 | 50665 | 5537.5 | LTE B66 | 20 | 50467 | 5517.7 | LTE B66 | 20 | 66786 | 2145 | - | - | - | - | - | - | - | - | - | - | - | - | - | - | - | - | 25.37 | 25.16 |
| CA_13A-46A-66B | LTE B13 | 10 | 23230 | 782 | QPSK | 1 | 49 | 5230 | 751 | LTE B46 | 20 | 55990 | 3625 | LTE B66 | 15 | 66786 | 2145 | LTE B66 | 5 | 66879 | 2154.3 | - | - | - | - | - | - | - | - | - | - | - | - | - | - | - | - | 25.33 | 25.16 |
| CA_13A-46A-66C | LTE B13 | 10 | 23230 | 782 | QPSK | 1 | 49 | 5230 | 751 | LTE B46 | 20 | 55990 | 3625 | LTE B66 | 20 | 66786 | 2145 | LTE B66 | 20 | 66984 | 2164.8 | - | - | - | - | - | - | - | - | - | - | - | - | - | - | - | - | 25.36 | 25.16 |
| CA_2A-2A-13A-66A-66A | LTE B13 | 10 | 23230 | 782 | QPSK | 1 | 49 | 5230 | 751 | LTE B2 | 20 | 900 | 1960 | LTE B2 | 20 | 700 | 1940 | LTE B66 | 20 | 66786 | 2145 | LTE B66 | 20 | 67236 | 2190 | - | - | - | - | - | - | - | - | - | - | - | - | 25.34 | 25.16 |
| CA_2A-2A-13A-66B | LTE B13 | 10 | 23230 | 782 | QPSK | 1 | 49 | 5230 | 751 | LTE B2 | 20 | 900 | 1960 | LTE B2 | 20 | 700 | 1940 | LTE B66 | 15 | 66786 | 2145 | LTE B66 | 5 | 66879 | 2154.3 | - | - | - | - | - | - | - | - | - | - | - | - | 25.32 | 25.16 |
| CA_2A-13A-66A-66A-66A | LTE B13 | 10 | 23230 | 782 | QPSK | 1 | 49 | 5230 | 751 | LTE B2 | 20 | 900 | 1960 | LTE B46 | 20 | 55990 | 3625 | LTE B46 | 20 | 56640 | 3690 | LTE B66 | 20 | 66786 | 2145 | - | - | - | - | - | - | - | - | - | - | - | - | 25.36 | 25.16 |
| CA_2A-13A-49A-48C | LTE B13 | 10 | 23230 | 782 | QPSK | 1 | 49 | 5230 | 751 | LTE B2 | 20 | 900 | 1960 | LTE B48 | 20 | 55990 | 3625 | LTE B48 | 20 | 56640 | 3690 | LTE B48 | 20 | 56442 | 3670.2 | - | - | - | - | - | - | - | - | - | - | - | - | 25.35 | 25.16 |
| CA_2A-13A-48C-66A | LTE B13 | 10 | 23230 | 782 | QPSK | 1 | 49 | 5230 | 751 | LTE B2 | 20 | 900 | 1960 | LTE B48 | 20 | 55990 | 3625 | LTE B48 | 20 | 56188 | 3644.8 | LTE B66 | 20 | 66786 | 2145 | - | - | - | - | - | - | - | - | - | - | - | - | 25.34 | 25.16 |
| CA_2A-13A-48D | LTE B13 | 10 | 23230 | 782 | QPSK | 1 | 49 | 5230 | 751 | LTE B2 | 20 | 900 | 1960 | LTE B48 | 20 | 55990 | 3625 | LTE B48 | 20 | 56188 | 3644.8 | LTE B66 | 20 | 56386 | 3664.6 | - | - | - | - | - | - | - | - | - | - | - | - | 25.33 | 25.16 |
| CA_2A-13A-66A-66B | LTE B13 | 10 | 23230 | 782 | QPSK | 1 | 49 | 5230 | 751 | LTE B2 | 20 | 900 | 1960 | LTE B66 | 5 | 67168 | 2181.3 | LTE B66 | 5 | 67168 | 2181.3 | LTE B66 | 15 | 67291 | 2192.5 | - | - | - | - | - | - | - | - | - | - | - | - | 25.34 | 25.16 |
| CA_13A-48A-48C-66A | LTE B13 | 10 | 23230 | 782 | QPSK | 1 | 49 | 5230 | 751 | LTE B48 | 20 | 55990 | 3625 | LTE B48 | 20 | 55340 | 3560 | LTE B48 | 20 | 55538 | 3579.8 | LTE B66 | 20 | 66786 | 2145 | - | - | - | - | - | - | - | - | - | - | - | - | 25.30 | 25.16 |
| CA_13A-48A-48D | LTE B13 | 10 | 23230 | 782 | QPSK | 1 | 49 | 5230 | 751 | LTE B48 | 20 | 55990 | 3625 | LTE B48 | 20 | 55340 | 3560 | LTE B48 | 20 | 55538 | 3579.8 | LTE B48 | 20 | 55736 | 3599.6 | - | - | - | - | - | - | - | - | - | - | - | - | 25.23 | 25.16 |
| CA_13A-48C-48C | LTE B13 | 10 | 23230 | 782 | QPSK | 1 | 49 | 5230 | 751 | LTE B48 | 20 | 55990 | 3625 | LTE B48 | 20 | 56188 | 3644.8 | LTE B48 | 20 | 55340 | 3560 | LTE B48 | 20 | 55538 | 3579.8 | - | - | - | - | - | - | - | - | - | - | - | - | 25.22 | 25.16 |
| CA_13A-48D-66A | LTE B13 | 10 | 23230 | 782 | QPSK | 1 | 49 | 5230 | 751 | LTE B48 | 20 | 55990 | 3625 | LTE B48 | 20 | 56188 | 3644.8 | LTE B48 | 20 | 56386 | 3664.6 | LTE B66 | 20 | 66786 | 2145 | - | - | - | - | - | - | - | - | - | - | - | - | 25.36 | 25.16 |
| CA_13A-48C-66B | LTE B13 | 10 | 23230 | 782 | QPSK | 1 | 49 | 5230 | 751 | LTE B48 | 20 | 55990 | 3625 | LTE B48 | 20 | 56188 | 3644.8 | LTE B66 | 15 | 66786 | 2145 | LTE B66 | 5 | 66879 | 2154.3 | - | - | - | - | - | - | - | - | - | - | - | - | 25.33 | 25.16 |
| CA_13A-48C-66C | LTE B13 | 10 | 23230 | 782 | QPSK | 1 | 49 | 5230 | 751 | LTE B48 | 20 | 55990 | 3625 | LTE B48 | 20 | 56188 | 3644.8 | LTE B66 | 20 | 66984 | 2164.8 | - | - | - | - | - | - | - | - | - | - | - | - | - | - | - | - | 25.32 | 25.16 |
| CA_2A-13A-48E | LTE B13 | 10 | 23230 | 782 | QPSK | 1 | 49 | 5230 | 751 | LTE B2 | 20 | 900 | 1960 | LTE B46 | 20 | 50665 | 5537.5 | LTE B46 | 20 | 50467 | 5517.7 | LTE B46 | 20 | 50863 | 5557.3 | LTE B48 | 20 | 51061 | 5577.1 | - | - | - | - | - | - | - | - | 25.28 | 25.16 |
| CA_13A-48E-66A | LTE B13 | 10 | 23230 | 782 | QPSK | 1 | 49 | 5230 | 751 | LTE B48 | 20 | 55990 | 3625 | LTE B48 | 20 | 56188 | 3644.8 | LTE B48 | 20 | 56386 | 3664.6 | LTE B48 | 20 | 55792 | 3625.2 | LTE B66 | 20 | 66786 | 2145 | - | - | - | - | - | - | - | - | 25.34 | 25.16 |
| CA_2A-13A-46D-66A-66A | LTE B13 | 10 | 23230 | 782 | QPSK | 1 | 49 | 5230 | 751 | LTE B2 | 20 | 900 | 1960 | LTE B46 | 20 | 50665 | 5537.5 | LTE B46 | 20 | 50467 | 5517.7 | LTE B46 | 20 | 50863 | 5557.3 | LTE B66 | 20 | 66786 | 2145 | LTE B66 | 20 | 67236 | 2190 | 25.25 | 25.16 |

## 1.3.4 LTE Band 14 as PCC

**Table 4**
**Maximum Output Powers**

| | PCC | | | | | | | | | SCC 1 | | | | SCC 2 | | | | SCC 3 | | | | SCC 4 | | | | Power | |
|---|---|---|---|---|---|---|---|---|---|---|---|---|---|---|---|---|---|---|---|---|---|---|---|---|---|---|---|
| Combination | PCC Band | PCC BW [MHz] | PCC (UL) Ch. | PCC (UL) Freq. [MHz] | Mod. | PCC UL# RB | PCC UL RB Offset | PCC (DL) Channel | PCC (DL) Freq. [MHz] | SCC Band | SCC BW [MHz] | SCC (DL) Channel | SCC (DL) Freq. [MHz] | SCC Band | SCC BW [MHz] | SCC (DL) Channel | SCC (DL) Freq. [MHz] | SCC Band | SCC BW [MHz] | SCC (DL) Channel | SCC (DL) Freq. [MHz] | SCC Band | SCC BW [MHz] | SCC (DL) Channel | SCC (DL) Freq. [MHz] | LTE Tx.Power with DL CA Enabled (dBm) | LTE Single Carrier Tx Power (dBm) |
| CA_2A-2A-14A-30A-66A | LTE B14 | 10 | 23330 | 793 | QPSK | 1 | 49 | 5330 | 763 | LTE B2 | 20 | 900 | 1960 | LTE B2 | 20 | 700 | 1940 | LTE B30 | 10 | 9820 | 2355 | LTE B66 | 20 | 66786 | 2145 | 25.25 | 25.16 |
| CA_2A-2A-14A-66A-66A | LTE B14 | 10 | 23330 | 793 | QPSK | 1 | 49 | 5330 | 763 | LTE B2 | 20 | 900 | 1960 | LTE B2 | 20 | 700 | 1940 | LTE B66 | 20 | 66786 | 2145 | LTE B66 | 20 | 67236 | 2190 | 25.36 | 25.16 |
| CA_2A-14A-30A-66A-66A | LTE B14 | 10 | 23330 | 793 | QPSK | 1 | 49 | 5330 | 763 | LTE B2 | 20 | 900 | 1960 | LTE B30 | 10 | 9820 | 2355 | LTE B66 | 20 | 66786 | 2145 | LTE B66 | 20 | 67236 | 2190 | 25.37 | 25.16 |

## 1.3.5 LTE Band 5 as PCC

**Table 5**
**Maximum Output Powers**

| | PCC | | | | | | | | | SCC 1 | | | | | SCC 2 | | | | | SCC 3 | | | | | SCC 4 | | | | | SCC 5 | | | | | SCC 6 | | | | Power | |
|---|---|---|---|---|---|---|---|---|---|---|---|---|---|---|---|---|---|---|---|---|---|---|---|---|---|---|---|---|---|---|---|---|---|---|---|---|---|---|---|---|
| Combination | PCC Band | PCC BW [MHz] | PCC (UL) Ch. | PCC (UL) Freq. [MHz] | Mod. | PCC UL# RB | PCC UL RB Offset | PCC (DL) Channel | PCC (DL) Freq. [MHz] | SCC Band | SCC BW [MHz] | SCC (DL) Channel | SCC (DL) Freq. [MHz] | SCC Band | SCC BW [MHz] | SCC (DL) Channel | SCC (DL) Freq. [MHz] | SCC Band | SCC BW [MHz] | SCC (DL) Channel | SCC (DL) Freq. [MHz] | SCC Band | SCC BW [MHz] | SCC (DL) Channel | SCC (DL) Freq. [MHz] | SCC Band | SCC BW [MHz] | SCC (DL) Channel | SCC (DL) Freq. [MHz] | SCC Band | SCC BW [MHz] | SCC (DL) Channel | SCC (DL) Freq. [MHz] | SCC Band | SCC BW [MHz] | SCC (DL) Channel | SCC (DL) Freq. [MHz] | LTE Tx.Power with DL CA Enabled (dBm) | LTE Single Carrier Tx Power (dBm) |
| CA_5A-5A (1) | LTE B5 | 3 | 20525 | 836.5 | QPSK | 1 | 14 | 2525 | 881.5 | LTE B5 | 5 | 2425 | 871.5 | - | - | - | - | - | - | - | - | - | - | - | - | - | - | - | - | - | - | - | - | - | - | - | - | 25.13 | 25.05 |
| CA_5A-25A | LTE B5 | 5 | 20525 | 836.5 | QPSK | 1 | 12 | 2525 | 881.5 | LTE B25 | 20 | 8365 | 1962.5 | - | - | - | - | - | - | - | - | - | - | - | - | - | - | - | - | - | - | - | - | - | - | - | - | 25.05 | 25.11 |
| CA_5A-48A (1) | LTE B5 | 5 | 20525 | 836.5 | QPSK | 1 | 12 | 2525 | 881.5 | LTE B48 | 20 | 55665 | 5537.5 | - | - | - | - | - | - | - | - | - | - | - | - | - | - | - | - | - | - | - | - | - | - | - | - | 25.11 | 25.11 |
| CA_5B (1) | LTE B5 | 5 | 20525 | 836.5 | QPSK | 1 | 12 | 2525 | 881.5 | LTE B5 | 3 | 2416 | 877.6 | - | - | - | - | - | - | - | - | - | - | - | - | - | - | - | - | - | - | - | - | - | - | - | - | 25.14 | 25.11 |
| CA_2A-5A-66A | LTE B5 | 5 | 20525 | 836.5 | QPSK | 1 | 12 | 2525 | 881.5 | LTE B2 | 20 | 900 | 1960 | LTE B46 | 20 | 50665 | 5537.5 | - | - | - | - | - | - | - | - | - | - | - | - | - | - | - | - | - | - | - | - | 25.11 | 25.11 |
| CA_5A-46A-66A | LTE B5 | 5 | 20525 | 836.5 | QPSK | 1 | 12 | 2525 | 881.5 | LTE B46 | 20 | 50665 | 5537.5 | LTE B66 | 20 | 66786 | 2145 | - | - | - | - | - | - | - | - | - | - | - | - | - | - | - | - | - | - | - | - | 25.10 | 25.11 |
| CA_5A-46C (1) | LTE B5 | 5 | 20525 | 836.5 | QPSK | 1 | 12 | 2525 | 881.5 | LTE B46 | 20 | 50665 | 5537.5 | LTE B46 | 20 | 50467 | 5517.7 | - | - | - | - | - | - | - | - | - | - | - | - | - | - | - | - | - | - | - | - | 25.14 | 25.11 |
| CA_5B-66A | LTE B5 | 5 | 20525 | 836.5 | QPSK | 1 | 12 | 2525 | 881.5 | LTE B5 | 10 | 2453 | 874.3 | LTE B46 | 20 | 50665 | 5537.5 | - | - | - | - | - | - | - | - | - | - | - | - | - | - | - | - | - | - | - | - | 25.10 | 25.11 |
| CA_2A-2A-4A-5A | LTE B5 | 5 | 20525 | 836.5 | QPSK | 1 | 12 | 2525 | 881.5 | LTE B2 | 20 | 900 | 1960 | LTE B2 | 20 | 700 | 1940 | LTE B4 | 20 | 2175 | 2132.5 | - | - | - | - | - | - | - | - | - | - | - | - | - | - | - | - | 25.12 | 25.11 |
| CA_2A-4A-4A-5A | LTE B5 | 5 | 20525 | 836.5 | QPSK | 1 | 12 | 2525 | 881.5 | LTE B2 | 20 | 900 | 1960 | LTE B4 | 20 | 2175 | 2132.5 | LTE B4 | 10 | 2350 | 2150 | - | - | - | - | - | - | - | - | - | - | - | - | - | - | - | - | 25.11 | 25.11 |
| CA_2A-4A-5B | LTE B5 | 5 | 20525 | 836.5 | QPSK | 1 | 12 | 2525 | 881.5 | LTE B5 | 10 | 2453 | 874.3 | LTE B2 | 20 | 900 | 1960 | LTE B4 | 20 | 2175 | 2132.5 | - | - | - | - | - | - | - | - | - | - | - | - | - | - | - | - | 25.08 | 25.11 |
| CA_2A-5A-46C | LTE B5 | 5 | 20525 | 836.5 | QPSK | 1 | 12 | 2525 | 881.5 | LTE B2 | 20 | 900 | 1960 | LTE B46 | 20 | 50665 | 5537.5 | LTE B46 | 20 | 50467 | 5517.7 | - | - | - | - | - | - | - | - | - | - | - | - | - | - | - | - | 25.16 | 25.11 |
| CA_4A-4A-5B | LTE B5 | 5 | 20525 | 836.5 | QPSK | 1 | 12 | 2525 | 881.5 | LTE B5 | 10 | 2453 | 874.3 | LTE B4 | 20 | 2175 | 2132.5 | LTE B4 | 10 | 2350 | 2150 | - | - | - | - | - | - | - | - | - | - | - | - | - | - | - | - | 25.10 | 25.11 |
| CA_5A-5A-66B | LTE B5 | 5 | 20525 | 836.5 | QPSK | 1 | 12 | 2525 | 881.5 | LTE B5 | 5 | 2425 | 871.5 | LTE B66 | 15 | 66786 | 2145 | LTE B66 | 5 | 66879 | 2154.3 | - | - | - | - | - | - | - | - | - | - | - | - | - | - | - | - | 25.16 | 25.11 |
| CA_5A-5A-66C | LTE B5 | 5 | 20525 | 836.5 | QPSK | 1 | 12 | 2525 | 881.5 | LTE B5 | 5 | 2425 | 871.5 | LTE B66 | 20 | 66786 | 2145 | LTE B66 | 20 | 66984 | 2164.8 | - | - | - | - | - | - | - | - | - | - | - | - | - | - | - | - | 25.09 | 25.11 |
| CA_5A-46C-66A | LTE B5 | 5 | 20525 | 836.5 | QPSK | 1 | 12 | 2525 | 881.5 | LTE B46 | 20 | 50665 | 5537.5 | LTE B46 | 20 | 50467 | 5517.7 | LTE B66 | 20 | 66786 | 2145 | - | - | - | - | - | - | - | - | - | - | - | - | - | - | - | - | 25.12 | 25.11 |
| CA_5B-46C | LTE B5 | 5 | 20525 | 836.5 | QPSK | 1 | 12 | 2525 | 881.5 | LTE B5 | 5 | 2477 | 876.7 | LTE B46 | 20 | 50665 | 5537.5 | LTE B46 | 20 | 50467 | 5517.7 | - | - | - | - | - | - | - | - | - | - | - | - | - | - | - | - | 25.08 | 25.11 |
| CA_5A-46D (1) | LTE B5 | 5 | 20525 | 836.5 | QPSK | 1 | 12 | 2525 | 881.5 | LTE B46 | 20 | 50665 | 5537.5 | LTE B46 | 20 | 50467 | 5517.7 | LTE B46 | 5 | 50863 | 5557.3 | - | - | - | - | - | - | - | - | - | - | - | - | - | - | - | - | 25.14 | 25.11 |
| CA_2A-2A-5A-30A-66A | LTE B5 | 5 | 20525 | 836.5 | QPSK | 1 | 12 | 2525 | 881.5 | LTE B2 | 20 | 900 | 1960 | LTE B2 | 20 | 700 | 1940 | LTE B30 | 10 | 9820 | 2355 | LTE B66 | 20 | 66786 | 2145 | - | - | - | - | - | - | - | - | - | - | - | - | 24.87 | 25.11 |
| CA_2A-2A-5A-66A-66A | LTE B5 | 5 | 20525 | 836.5 | QPSK | 1 | 12 | 2525 | 881.5 | LTE B2 | 20 | 900 | 1960 | LTE B2 | 20 | 700 | 1940 | LTE B66 | 20 | 66786 | 2145 | LTE B66 | 20 | 67236 | 2190 | - | - | - | - | - | - | - | - | - | - | - | - | 25.10 | 25.11 |
| CA_2A-2A-5A-66B | LTE B5 | 5 | 20525 | 836.5 | QPSK | 1 | 12 | 2525 | 881.5 | LTE B2 | 20 | 900 | 1960 | LTE B2 | 20 | 700 | 1940 | LTE B66 | 15 | 66786 | 2145 | LTE B66 | 5 | 66879 | 2154.3 | - | - | - | - | - | - | - | - | - | - | - | - | 25.06 | 25.11 |
| CA_2A-2A-5A-66C | LTE B5 | 5 | 20525 | 836.5 | QPSK | 1 | 12 | 2525 | 881.5 | LTE B2 | 20 | 900 | 1960 | LTE B2 | 20 | 700 | 1940 | LTE B66 | 20 | 66786 | 2145 | LTE B66 | 20 | 66984 | 2164.8 | - | - | - | - | - | - | - | - | - | - | - | - | 25.19 | 25.11 |
| CA_2A-5A-5A-66A-66A | LTE B5 | 5 | 20525 | 836.5 | QPSK | 1 | 12 | 2525 | 881.5 | LTE B5 | 5 | 2425 | 871.5 | LTE B2 | 20 | 900 | 1960 | LTE B2 | 20 | 66786 | 2145 | LTE B66 | 20 | 67236 | 2190 | - | - | - | - | - | - | - | - | - | - | - | - | 25.04 | 25.11 |
| CA_2A-5A-30A-66A-66A | LTE B5 | 5 | 20525 | 836.5 | QPSK | 1 | 12 | 2525 | 881.5 | LTE B2 | 20 | 900 | 1960 | LTE B30 | 10 | 9820 | 2355 | LTE B66 | 20 | 66786 | 2145 | LTE B66 | 20 | 67236 | 2190 | - | - | - | - | - | - | - | - | - | - | - | - | 25.11 | 25.11 |
| CA_2A-5B-30A-66A | LTE B5 | 5 | 20525 | 836.5 | QPSK | 1 | 12 | 2525 | 881.5 | LTE B5 | 10 | 2453 | 874.3 | LTE B2 | 20 | 900 | 1960 | LTE B30 | 10 | 9820 | 2355 | LTE B66 | 20 | 66786 | 2145 | - | - | - | - | - | - | - | - | - | - | - | - | 25.13 | 25.11 |
| CA_2A-5A-48A-66A-66A | LTE B5 | 5 | 20525 | 836.5 | QPSK | 1 | 12 | 2525 | 881.5 | LTE B2 | 20 | 900 | 1960 | LTE B48 | 20 | 55990 | 3625 | LTE B48 | 20 | 55340 | 3560 | LTE B66 | 20 | 66786 | 2145 | - | - | - | - | - | - | - | - | - | - | - | - | 25.06 | 25.11 |
| CA_2A-5A-48A-48C | LTE B5 | 5 | 20525 | 836.5 | QPSK | 1 | 12 | 2525 | 881.5 | LTE B2 | 20 | 900 | 1960 | LTE B48 | 20 | 55990 | 3625 | LTE B48 | 20 | 55340 | 3560 | LTE B48 | 20 | 55538 | 3579.8 | - | - | - | - | - | - | - | - | - | - | - | - | 25.04 | 25.11 |
| CA_2A-5A-48C-66A | LTE B5 | 5 | 20525 | 836.5 | QPSK | 1 | 12 | 2525 | 881.5 | LTE B2 | 20 | 900 | 1960 | LTE B48 | 20 | 55990 | 3625 | LTE B48 | 20 | 56188 | 3644.8 | LTE B66 | 20 | 66786 | 2145 | - | - | - | - | - | - | - | - | - | - | - | - | 25.08 | 25.11 |
| CA_2A-5A-48D-66A | LTE B5 | 5 | 20525 | 836.5 | QPSK | 1 | 12 | 2525 | 881.5 | LTE B2 | 20 | 900 | 1960 | LTE B48 | 20 | 55990 | 3625 | LTE B48 | 20 | 56188 | 3644.8 | LTE B66 | 20 | 56386 | 3664.6 | - | - | - | - | - | - | - | - | - | - | - | - | 25.07 | 25.11 |
| CA_2A-5B-66A-66A | LTE B5 | 5 | 20525 | 836.5 | QPSK | 1 | 12 | 2525 | 881.5 | LTE B5 | 10 | 2453 | 874.3 | LTE B2 | 20 | 900 | 1960 | LTE B66 | 20 | 66786 | 2145 | LTE B66 | 20 | 67236 | 2190 | - | - | - | - | - | - | - | - | - | - | - | - | 25.03 | 25.11 |
| CA_2A-5B-66B | LTE B5 | 5 | 20525 | 836.5 | QPSK | 1 | 12 | 2525 | 881.5 | LTE B5 | 10 | 2453 | 874.3 | LTE B2 | 20 | 900 | 1960 | LTE B66 | 15 | 66786 | 2145 | LTE B66 | 5 | 66879 | 2154.3 | - | - | - | - | - | - | - | - | - | - | - | - | 25.05 | 25.11 |
| CA_2A-5B-66C | LTE B5 | 5 | 20525 | 836.5 | QPSK | 1 | 12 | 2525 | 881.5 | LTE B5 | 10 | 2453 | 874.3 | LTE B2 | 20 | 900 | 1960 | LTE B66 | 20 | 66786 | 2145 | LTE B66 | 20 | 66984 | 2164.8 | - | - | - | - | - | - | - | - | - | - | - | - | 25.10 | 25.11 |
| CA_5B-30A-66A-66A | LTE B5 | 5 | 20525 | 836.5 | QPSK | 1 | 12 | 2525 | 881.5 | LTE B5 | 10 | 2453 | 874.3 | LTE B30 | 10 | 9820 | 2355 | LTE B66 | 20 | 66786 | 2145 | LTE B66 | 20 | 67236 | 2190 | - | - | - | - | - | - | - | - | - | - | - | - | 25.03 | 25.11 |
| CA_5A-46E (1) | LTE B5 | 5 | 20525 | 836.5 | QPSK | 1 | 12 | 2525 | 881.5 | LTE B46 | 20 | 50665 | 5537.5 | LTE B46 | 20 | 50467 | 5517.7 | LTE B46 | 20 | 50863 | 5557.3 | LTE B46 | 20 | 51061 | 5577.1 | - | - | - | - | - | - | - | - | - | - | - | - | 25.14 | 25.11 |
| CA_5B-46D | LTE B5 | 5 | 20525 | 836.5 | QPSK | 1 | 12 | 2525 | 881.5 | LTE B5 | 10 | 2453 | 874.3 | LTE B46 | 20 | 50665 | 5537.5 | LTE B46 | 20 | 50467 | 5517.7 | LTE B46 | 20 | 50863 | 5557.3 | - | - | - | - | - | - | - | - | - | - | - | - | 25.01 | 25.11 |
| CA_5A-48A-48C-66A | LTE B5 | 5 | 20525 | 836.5 | QPSK | 1 | 12 | 2525 | 881.5 | LTE B48 | 20 | 55990 | 3625 | LTE B48 | 20 | 55340 | 3560 | LTE B48 | 20 | 55538 | 3579.8 | LTE B66 | 20 | 66786 | 2145 | - | - | - | - | - | - | - | - | - | - | - | - | 25.03 | 25.11 |
| CA_5A-48A-48D | LTE B5 | 5 | 20525 | 836.5 | QPSK | 1 | 12 | 2525 | 881.5 | LTE B48 | 20 | 55990 | 3625 | LTE B48 | 20 | 56640 | 3690 | LTE B48 | 20 | 56442 | 3670.2 | LTE B66 | 20 | 56264 | 3652.4 | - | - | - | - | - | - | - | - | - | - | - | - | 25.18 | 25.11 |
| CA_5A-48C-48C | LTE B5 | 5 | 20525 | 836.5 | QPSK | 1 | 12 | 2525 | 881.5 | LTE B48 | 20 | 55990 | 3625 | LTE B48 | 20 | 56188 | 3644.8 | LTE B48 | 20 | 55340 | 3560 | LTE B48 | 20 | 55538 | 3579.8 | - | - | - | - | - | - | - | - | - | - | - | - | 25.17 | 25.11 |
| CA_5A-48D-66A | LTE B5 | 5 | 20525 | 836.5 | QPSK | 1 | 12 | 2525 | 881.5 | LTE B48 | 20 | 55990 | 3625 | LTE B48 | 20 | 56188 | 3644.8 | LTE B48 | 20 | 56386 | 3664.6 | LTE B66 | 20 | 66786 | 2145 | - | - | - | - | - | - | - | - | - | - | - | - | 25.04 | 25.11 |
| CA_5A-48E | LTE B5 | 5 | 20525 | 836.5 | QPSK | 1 | 12 | 2525 | 881.5 | LTE B48 | 20 | 55990 | 3625 | LTE B48 | 20 | 56188 | 3644.8 | LTE B48 | 20 | 56386 | 3664.6 | LTE B48 | 20 | 56594 | 3684.4 | - | - | - | - | - | - | - | - | - | - | - | - | 25.13 | 25.11 |
| CA_2A-5A-46D-66A-66A | LTE B5 | 5 | 20525 | 836.5 | QPSK | 1 | 12 | 2525 | 881.5 | LTE B2 | 20 | 900 | 1960 | LTE B46 | 20 | 50665 | 5537.5 | LTE B46 | 20 | 50467 | 5517.7 | LTE B46 | 20 | 50863 | 5557.3 | LTE B66 | 20 | 66786 | 2145 | LTE B66 | 20 | 67236 | 2190 | 25.13 | 25.11 |
| CA_2A-5A-46E-66A | LTE B5 | 5 | 20525 | 836.5 | QPSK | 1 | 12 | 2525 | 881.5 | LTE B2 | 20 | 900 | 1960 | LTE B46 | 20 | 50665 | 5537.5 | LTE B46 | 20 | 50467 | 5517.7 | LTE B46 | 20 | 50863 | 5557.3 | LTE B46 | 20 | 51061 | 5577.1 | LTE B66 | 20 | 67236 | 2190 | 25.17 | 25.11 |
| CA_5A-46E-66A-66A | LTE B5 | 5 | 20525 | 836.5 | QPSK | 1 | 12 | 2525 | 881.5 | LTE B46 | 20 | 50665 | 5537.5 | LTE B46 | 20 | 50467 | 5517.7 | LTE B46 | 20 | 50863 | 5557.3 | LTE B46 | 20 | 51061 | 5577.1 | LTE B66 | 20 | 66786 | 2145 | LTE B66 | 20 | 67236 | 2190 | 25.21 | 25.11 |

## 1.3.6 LTE Band 26 as PCC

**Table 6**
**Maximum Output Powers**

| | PCC | | | | | | | | | SCC 1 | | | | SCC 2 | | | | SCC 3 | | | | Power | |
|---|---|---|---|---|---|---|---|---|---|---|---|---|---|---|---|---|---|---|---|---|---|---|---|
| Combination | PCC Band | PCC BW [MHz] | PCC (UL) Ch. | PCC (UL) Freq. [MHz] | Mod. | PCC UL# RB | PCC UL RB Offset | PCC (DL) Channel | PCC (DL) Freq. [MHz] | SCC Band | SCC BW [MHz] | SCC (DL) Channel | SCC (DL) Freq. [MHz] | SCC Band | SCC BW [MHz] | SCC (DL) Channel | SCC (DL) Freq. [MHz] | SCC Band | SCC BW [MHz] | SCC (DL) Channel | SCC (DL) Freq. [MHz] | LTE Tx.Power with DL CA Enabled (dBm) | LTE Single Carrier Tx Power (dBm) |
| CA_25A-25A-26A | LTE B26 | 5 | 26865 | 831.5 | QPSK | 1 | 24 | 8865 | 876.5 | LTE B25 | 20 | 8365 | 1962.5 | LTE B25 | 20 | 8590 | 1985 | - | - | - | - | 25.02 | 25.11 |
| CA_25A-26A-41A | LTE B26 | 5 | 26865 | 831.5 | QPSK | 1 | 24 | 8865 | 876.5 | LTE B25 | 20 | 8365 | 1962.5 | LTE B41 | 20 | 40620 | 2593 | - | - | - | - | 25.09 | 25.11 |
| CA_26A-41C | LTE B26 | 5 | 26865 | 831.5 | QPSK | 1 | 24 | 8865 | 876.5 | LTE B41 | 20 | 40620 | 2593 | LTE B41 | 20 | 40422 | 2573.2 | - | - | - | - | 25.14 | 25.11 |
| CA_25A-26A-41C | LTE B26 | 5 | 26865 | 831.5 | QPSK | 1 | 24 | 8865 | 876.5 | LTE B25 | 20 | 8140 | 1940 | LTE B41 | 20 | 40620 | 2593 | LTE B41 | 20 | 40422 | 2573.2 | 25.13 | 25.11 |



© 2020 PCTEST

## 1.3.7 LTE Band 66 as PCC

**Table 7**
**Maximum Output Powers**

| | PCC | | | | | | | | | SCC 1 | | | | | SCC 2 | | | | | SCC 3 | | | | | SCC 4 | | | | | SCC 5 | | | | | SCC 6 | | | | | Power | |
|---|---|---|---|---|---|---|---|---|---|---|---|---|---|---|---|---|---|---|---|---|---|---|---|---|---|---|---|---|---|---|---|---|---|---|---|---|---|---|---|---|---|
| Combination | PCC Band | PCC BW [MHz] | PCC (UL) Ch. | PCC (UL) Freq. [MHz] | Mod. | PCC UL# RB | PCC UL RB Offset | PCC (DL) Channel | PCC (DL) Freq. [MHz] | SCC Band | SCC BW [MHz] | SCC (DL) Channel | S

### 1.3.10 LTE Band 41 as PCC

**Table 10**
**Maximum Output Powers**

| | PCC | | | | | | | | | SCC 1 | | | | SCC 2 | | | | SCC 3 | | | | SCC 4 | | | | Power | |
|---|---|---|---|---|---|---|---|---|---|---|---|---|---|---|---|---|---|---|---|---|---|---|---|---|---|---|---|
| Combination | PCC Band | PCC BW [MHz] | PCC (UL) Ch. | PCC (UL) Freq. [MHz] | Mod. | PCC UL# RB | PCC UL RB Offset | PCC (DL) Channel | PCC (DL) Freq. [MHz] | SCC Band | SCC BW [MHz] | SCC (DL) Channel | SCC (DL) Freq. [MHz] | SCC Band | SCC BW [MHz] | SCC (DL) Channel | SCC (DL) Freq. [MHz] | SCC Band | SCC BW [MHz] | SCC (DL) Channel | SCC (DL) Freq. [MHz] | SCC Band | SCC BW [MHz] | SCC (DL) Channel | SCC (DL) Freq. [MHz] | LTE Tx.Power with DL CA Enabled (dBm) | LTE Single Carrier Tx Power (dBm) |
| CA_41A-41A (1) | LTE B41 | 10 | 40620 | 2593 | QPSK | 1 | 25 | 40620 | 2593 | LTE B41 | 20 | 41490 | 2680 | - | - | - | - | - | - | - | - | - | - | - | - | 24.55 | 24.56 |
| CA_41A-41C | LTE B41 | 10 | 40620 | 2593 | QPSK | 1 | 25 | 40620 | 2593 | LTE B41 | 20 | 41292 | 2660.2 | LTE B41 | 20 | 41490 | 2680 | - | - | - | - | - | - | - | - | 24.53 | 24.56 |
| CA_41C-41A | LTE B41 | 10 | 40620 | 2593 | QPSK | 1 | 25 | 40620 | 2593 | LTE B41 | 20 | 40764 | 2607.4 | LTE B41 | 20 | 41490 | 2680 | - | - | - | - | - | - | - | - | 24.56 | 24.56 |
| CA_41A-41D | LTE B41 | 10 | 40620 | 2593 | QPSK | 1 | 25 | 40620 | 2593 | LTE B41 | 20 | 41094 | 2640.4 | LTE B41 | 20 | 41292 | 2660.2 | LTE B41 | 20 | 41490 | 2680 | - | - | - | - | 24.54 | 24.56 |
| CA_41D-41A | LTE B41 | 10 | 40620 | 2593 | QPSK | 1 | 25 | 40620 | 2593 | LTE B41 | 20 | 40476 | 2578.6 | LTE B41 | 20 | 40764 | 2607.4 | LTE B41 | 20 | 41490 | 2680 | - | - | - | - | 24.53 | 24.56 |
| CA_41C-41C | LTE B41 | 10 | 40620 | 2593 | QPSK | 1 | 25 | 40620 | 2593 | LTE B41 | 20 | 40476 | 2578.6 | LTE B41 | 20 | 41292 | 2660.2 | LTE B41 | 20 | 41490 | 2680 | - | - | - | - | 24.52 | 24.56 |
| CA_41E | LTE B41 | 15 | 40620 | 2593 | QPSK | 1 | 36 | 40620 | 2593 | LTE B41 | 20 | 40449 | 2575.9 | LTE B41 | 20 | 40791 | 2610.1 | LTE B41 | 20 | 40989 | 2629.9 | - | - | - | - | 24.30 | 24.36 |
| CA_41C-41D | LTE B41 | 10 | 40620 | 2593 | QPSK | 1 | 25 | 40620 | 2593 | LTE B41 | 20 | 40476 | 2578.6 | LTE B41 | 20 | 41094 | 2640.4 | LTE B41 | 20 | 41292 | 2660.2 | LTE B41 | 20 | 41490 | 2680 | 24.60 | 24.56 |
| CA_41D-41C | LTE B41 | 10 | 40620 | 2593 | QPSK | 1 | 25 | 40620 | 2593 | LTE B41 | 20 | 40476 | 2578.6 | LTE B41 | 20 | 40764 | 2607.4 | LTE B41 | 20 | 41292 | 2660.2 | LTE B41 | 20 | 41490 | 2680 | 24.62 | 24.56 |

### 1.3.11 LTE Band 48 as PCC

**Table 11**
**Maximum Output Powers**

| | PCC | | | | | | | | | SCC 1 | | | | SCC 2 | | | | SCC 3 | | | | SCC 4 | | | | Power | |
|---|---|---|---|---|---|---|---|---|---|---|---|---|---|---|---|---|---|---|---|---|---|---|---|---|---|---|---|
| Combination | PCC Band | PCC BW [MHz] | PCC (UL) Ch. | PCC (UL) Freq. [MHz] | Mod. | PCC UL# RB | PCC UL RB Offset | PCC (DL) Channel | PCC (DL) Freq. [MHz] | SCC Band | SCC BW [MHz] | SCC (DL) Channel | SCC (DL) Freq. [MHz] | SCC Band | SCC BW [MHz] | SCC (DL) Channel | SCC (DL) Freq. [MHz] | SCC Band | SCC BW [MHz] | SCC (DL) Channel | SCC (DL) Freq. [MHz] | SCC Band | SCC BW [MHz] | SCC (DL) Channel | SCC (DL) Freq. [MHz] | LTE Tx.Power with DL CA Enabled (dBm) | LTE Single Carrier Tx Power (dBm) |
| CA_48A-48A | LTE B48 | 10 | 56690 | 3695 | QPSK | 25 | 12 | 56690 | 3695 | LTE B48 | 20 | 55340 | 3560 | - | - | - | - | - | - | - | - | - | - | - | - | 22.80 | 22.74 |
| CA_48A-48C | LTE B48 | 10 | 56690 | 3695 | QPSK | 25 | 12 | 56690 | 3695 | LTE B48 | 20 | 55340 | 3560 | LTE B48 | 20 | 55538 | 3579.8 | - | - | - | - | - | - | - | - | 22.76 | 22.74 |
| CA_48C-48A | LTE B48 | 10 | 56690 | 3695 | QPSK | 25 | 12 | 56690 | 3695 | LTE B48 | 20 | 56546 | 3680.6 | LTE B48 | 20 | 55340 | 3560 | - | - | - | - | - | - | - | - | 22.75 | 22.74 |
| CA_48A-48D | LTE B48 | 10 | 56690 | 3695 | QPSK | 25 | 12 | 56690 | 3695 | LTE B48 | 20 | 55340 | 3560 | LTE B48 | 20 | 55538 | 3579.8 | LTE B48 | 20 | 55736 | 3599.6 | - | - | - | - | 22.80 | 22.74 |
| CA_48D-48A | LTE B48 | 10 | 56690 | 3695 | QPSK | 25 | 12 | 56690 | 3695 | LTE B48 | 20 | 56546 | 3680.6 | LTE B48 | 20 | 56348 | 3660.8 | LTE B48 | 20 | 55340 | 3560 | - | - | - | - | 22.84 | 22.74 |
| CA_48C-48C | LTE B48 | 10 | 56690 | 3695 | QPSK | 25 | 12 | 56690 | 3695 | LTE B48 | 20 | 56546 | 3680.6 | LTE B48 | 20 | 55340 | 3560 | LTE B48 | 20 | 55538 | 3579.8 | - | - | - | - | 22.77 | 22.74 |
| CA_48A-48E | LTE B48 | 10 | 56690 | 3695 | QPSK | 25 | 12 | 56690 | 3695 | LTE B48 | 20 | 55340 | 3560 | LTE B48 | 20 | 55538 | 3579.8 | LTE B48 | 20 | 55736 | 3599.6 | LTE B48 | 20 | 55934 | 3619.4 | 22.68 | 22.74 |
| CA_48E-48A | LTE B48 | 10 | 56690 | 3695 | QPSK | 25 | 12 | 56690 | 3695 | LTE B48 | 20 | 56546 | 3680.6 | LTE B48 | 20 | 56348 | 3660.8 | LTE B48 | 20 | 56096 | 3635.6 | LTE B48 | 20 | 55340 | 3560 | 22.70 | 22.74 |
| CA_48C-48D | LTE B48 | 10 | 56690 | 3695 | QPSK | 25 | 12 | 56690 | 3695 | LTE B48 | 20 | 56546 | 3680.6 | LTE B48 | 20 | 55340 | 3560 | LTE B48 | 20 | 55538 | 3579.8 | LTE B48 | 20 | 55736 | 3599.6 | 22.74 | 22.74 |
| CA_48D-48C | LTE B48 | 10 | 56690 | 3695 | QPSK | 25 | 12 | 56690 | 3695 | LTE B48 | 20 | 56546 | 3680.6 | LTE B48 | 20 | 56348 | 3660.8 | LTE B48 | 20 | 55340 | 3560 | LTE B48 | 20 | 55538 | 3579.8 | 22.71 | 22.74 |
| CA_48F | LTE B48 | 10 | 56690 | 3695 | QPSK | 25 | 12 | 56690 | 3695 | LTE B48 | 20 | 56546 | 3680.6 | LTE B48 | 20 | 56348 | 3660.8 | LTE B48 | 20 | 56150 | 3641 | LTE B48 | 20 | 55952 | 3621.2 | 22.78 | 22.74 |

## 1.4 DL CA with DL 4x4 MIMO RF Conduction Powers

This device supports downlink 4x4 MIMO operations for some LTE bands. Uplink transmission is limited to a single output stream. When carrier aggregation was applicable, the general test selection and setup procedures described in Section 1.2 were applied.

Per May 2017 TCB Workshop Notes, SAR for 4x4 DL MIMO was not needed since the maximum average output power in 4x4 DL MIMO mode was not more than 0.25 dB higher than the maximum output power with 4x4 DL MIMO inactive. Additionally, SAR for 4x4 MIMO Downlink Carrier Aggregation was not needed since the maximum average output power in 4x4 MIMO Downlink Carrier Aggregation mode was not more than 0.25 dB higher than the maximum output power with 4x4 MIMO Downlink and downlink carrier aggregation inactive.

### 1.4.1 LTE 4x4 MIMO DL Standalone Powers

**Table 12**
**Maximum Output Powers**

| LTE Band | Bandwidth [MHz] | Channel | Frequency [MHz] | Modulation | RB Size | RB Offset | 4x4 DL MIMO Tx. Power [dBm] | Single Antenna Tx. Power [dBm] |
|---|---|---|---|---|---|---|---|---|
| 66 | 10 | 132022 | 1715 | QPSK | 1 | 25 | 23.88 | 23.90 |
| 25 | 20 | 26140 | 1860 | QPSK | 1 | 0 | 24.05 | 24.03 |
| 30 | 10 | 27710 | 2310 | QPSK | 1 | 25 | 23.23 | 23.24 |
| 41 | 10 | 40620 | 2593 | QPSK | 1 | 25 | 24.55 | 24.56 |
| 48 | 10 | 56690 | 3695 | QPSK | 25 | 12 | 22.72 | 22.74 |


© 2020 PCTEST

## 1.4.2 LTE Band 71 as PCC

**Table 13**
**Maximum Output Powers**

| | PCC | | | | | | | | | | SCC 1 | | | | | SCC 2 | | | | | SCC 3 | | | | | Power | |
|---|---|---|---|---|---|---|---|---|---|---|---|---|---|---|---|---|---|---|---|---|---|---|---|---|---|---|---|
| Combination | PCC Band | PCC BW [MHz] | PCC (UL) Ch. | PCC (UL) Freq. [MHz] | Mod. | PCC UL# RB | PCC UL RB Offset | PCC (DL) Ch. | PCC (DL) Freq. [MHz] | DL Ant. Config. | SCC Band | SCC BW [MHz] | SCC (DL) Ch. | SCC (DL) Freq. [MHz] | DL Ant. Config. | SCC Band | SCC BW [MHz] | SCC (DL) Ch. | SCC (DL) Freq. [MHz] | DL Ant. Config. | SCC Band | SCC BW [MHz] | SCC (DL) Ch. | SCC (DL) Freq. [MHz] | DL Ant. Config. | LTE Tx.Power with DL CA Enabled | LTE Single Carrier Tx Power (dBm) |
| CA_[4A]-4A-71A | LTE B71 | 15 | 133297 | 680.5 | QPSK | 1 | 74 | 68761 | 634.5 | 2x2 | LTE B4 | 20 | 2175 | 2132.5 | 4x4 | LTE B4 | 10 | 2350 | 2150 | 2x2 | - | - | - | - | - | 25.05 | 25.10 |
| CA_[4A]-[4A]-71A | LTE B71 | 15 | 133297 | 680.5 | QPSK | 1 | 74 | 68761 | 634.5 | 2x2 | LTE B4 | 20 | 2175 | 2132.5 | 4x4 | LTE B4 | 10 | 2350 | 2150 | 4x4 | - | - | - | - | - | 25.10 | 25.10 |
| CA_[4B]-4B-71A | LTE B71 | 15 | 133297 | 680.5 | QPSK | 1 | 74 | 68761 | 634.5 | 2x2 | LTE B48 | 20 | 55990 | 3625 | 4x4 | LTE B48 | 20 | 56640 | 3690 | 2x2 | - | - | - | - | - | 25.05 | 25.10 |
| CA_[4B]-[4B]-71A | LTE B71 | 15 | 133297 | 680.5 | QPSK | 1 | 74 | 68761 | 634.5 | 2x2 | LTE B48 | 20 | 55990 | 3625 | 4x4 | LTE B48 | 20 | 55340 | 3560 | 4x4 | - | - | - | - | - | 25.01 | 25.10 |
| CA_[4B]-71A | LTE B71 | 15 | 133297 | 680.5 | QPSK | 1 | 74 | 68761 | 634.5 | 2x2 | LTE B48 | 20 | 55990 | 3625 | 4x4 | LTE B48 | 20 | 56188 | 3644.8 | 4x4 | - | - | - | - | - | 24.87 | 25.10 |
| CA_[2A]-2A-4A-71A | LTE B71 | 15 | 133297 | 680.5 | QPSK | 1 | 74 | 68761 | 634.5 | 2x2 | LTE B2 | 20 | 900 | 1960 | 4x4 | LTE B2 | 20 | 700 | 1940 | 2x2 | LTE B4 | 20 | 2175 | 2132.5 | 2x2 | 25.13 | 25.10 |
| CA_2A-2A-[4A]-71A | LTE B71 | 15 | 133297 | 680.5 | QPSK | 1 | 74 | 68761 | 634.5 | 2x2 | LTE B2 | 20 | 900 | 1960 | 2x2 | LTE B2 | 20 | 700 | 1940 | 2x2 | LTE B4 | 20 | 2175 | 2132.5 | 4x4 | 25.32 | 25.10 |
| CA_[2A]-[2A]-4A-71A | LTE B71 | 15 | 133297 | 680.5 | QPSK | 1 | 74 | 68761 | 634.5 | 2x2 | LTE B2 | 20 | 900 | 1960 | 4x4 | LTE B2 | 20 | 700 | 1940 | 4x4 | LTE B4 | 20 | 2175 | 2132.5 | 2x2 | 25.15 | 25.10 |
| CA_[2A]-2A-[4A]-71A | LTE B71 | 15 | 133297 | 680.5 | QPSK | 1 | 74 | 68761 | 634.5 | 2x2 | LTE B2 | 20 | 900 | 1960 | 4x4 | LTE B2 | 20 | 700 | 1940 | 2x2 | LTE B4 | 20 | 2175 | 2132.5 | 4x4 | 25.20 | 25.10 |
| CA_[2A]-[2A]-[4A]-71A | LTE B71 | 15 | 133297 | 680.5 | QPSK | 1 | 74 | 68761 | 634.5 | 2x2 | LTE B2 | 20 | 900 | 1960 | 4x4 | LTE B2 | 20 | 700 | 1940 | 4x4 | LTE B4 | 20 | 2175 | 2132.5 | 4x4 | 25.17 | 25.10 |
| CA_[2A]-2A-66A-71A | LTE B71 | 15 | 133297 | 680.5 | QPSK | 1 | 74 | 68761 | 634.5 | 2x2 | LTE B2 | 20 | 900 | 1960 | 4x4 | LTE B2 | 20 | 700 | 1940 | 2x2 | LTE B66 | 20 | 66786 | 2145 | 2x2 | 25.10 | 25.10 |
| CA_2A-2A-[66A]-71A | LTE B71 | 15 | 133297 | 680.5 | QPSK | 1 | 74 | 68761 | 634.5 | 2x2 | LTE B2 | 20 | 900 | 1960 | 2x2 | LTE B2 | 20 | 700 | 1940 | 2x2 | LTE B66 | 20 | 66786 | 2145 | 4x4 | 25.13 | 25.10 |
| CA_[2A]-[2A]-66A-71A | LTE B71 | 15 | 133297 | 680.5 | QPSK | 1 | 74 | 68761 | 634.5 | 2x2 | LTE B2 | 20 | 900 | 1960 | 4x4 | LTE B2 | 20 | 700 | 1940 | 4x4 | LTE B66 | 20 | 66786 | 2145 | 2x2 | 25.12 | 25.10 |
| CA_[2A]-2A-[66A]-71A | LTE B71 | 15 | 133297 | 680.5 | QPSK | 1 | 74 | 68761 | 634.5 | 2x2 | LTE B2 | 20 | 900 | 1960 | 4x4 | LTE B2 | 20 | 700 | 1940 | 2x2 | LTE B66 | 20 | 66786 | 2145 | 4x4 | 25.17 | 25.10 |
| CA_[2A]-[2A]-[66A]-71A | LTE B71 | 15 | 133297 | 680.5 | QPSK | 1 | 74 | 68761 | 634.5 | 2x2 | LTE B2 | 20 | 900 | 1960 | 4x4 | LTE B2 | 20 | 700 | 1940 | 4x4 | LTE B66 | 20 | 66786 | 2145 | 4x4 | 25.18 | 25.10 |
| CA_[2A]-66A-66A-71A | LTE B71 | 15 | 133297 | 680.5 | QPSK | 1 | 74 | 68761 | 634.5 | 2x2 | LTE B2 | 20 | 900 | 1960 | 4x4 | LTE B66 | 20 | 66786 | 2145 | 2x2 | LTE B66 | 20 | 67236 | 2190 | 2x2 | 25.19 | 25.10 |
| CA_2A-[66A]-66A-71A | LTE B71 | 15 | 133297 | 680.5 | QPSK | 1 | 74 | 68761 | 634.5 | 2x2 | LTE B2 | 20 | 900 | 1960 | 2x2 | LTE B66 | 20 | 66786 | 2145 | 4x4 | LTE B66 | 20 | 67236 | 2190 | 2x2 | 25.21 | 25.10 |
| CA_[2A]-[66A]-66A-71A | LTE B71 | 15 | 133297 | 680.5 | QPSK | 1 | 74 | 68761 | 634.5 | 2x2 | LTE B2 | 20 | 900 | 1960 | 4x4 | LTE B66 | 20 | 66786 | 2145 | 4x4 | LTE B66 | 20 | 67236 | 2190 | 2x2 | 25.17 | 25.10 |
| CA_2A-[66A]-[66A]-71A | LTE B71 | 15 | 133297 | 680.5 | QPSK | 1 | 74 | 68761 | 634.5 | 2x2 | LTE B2 | 20 | 900 | 1960 | 2x2 | LTE B66 | 20 | 66786 | 2145 | 4x4 | LTE B66 | 20 | 67236 | 2190 | 4x4 | 24.99 | 25.10 |
| CA_[2A]-[66A]-[66A]-71A | LTE B71 | 15 | 133297 | 680.5 | QPSK | 1 | 74 | 68761 | 634.5 | 2x2 | LTE B2 | 20 | 900 | 1960 | 4x4 | LTE B66 | 20 | 66786 | 2145 | 4x4 | LTE B66 | 20 | 67236 | 2190 | 4x4 | 25.03 | 25.10 |
| CA_[2A]-66C-71A | LTE B71 | 15 | 133297 | 680.5 | QPSK | 1 | 74 | 68761 | 634.5 | 2x2 | LTE B2 | 20 | 900 | 1960 | 4x4 | LTE B66 | 20 | 66786 | 2145 | 2x2 | LTE B66 | 20 | 66984 | 2164.8 | 2x2 | 25.17 | 25.10 |
| CA_2A-[66C]-71A | LTE B71 | 15 | 133297 | 680.5 | QPSK | 1 | 74 | 68761 | 634.5 | 2x2 | LTE B2 | 20 | 900 | 1960 | 2x2 | LTE B66 | 20 | 66786 | 2145 | 4x4 | LTE B66 | 20 | 66984 | 2164.8 | 4x4 | 25.19 | 25.10 |
| CA_[2A]-[66C]-71A | LTE B71 | 15 | 133297 | 680.5 | QPSK | 1 | 74 | 68761 | 634.5 | 2x2 | LTE B2 | 20 | 900 | 1960 | 4x4 | LTE B66 | 20 | 66786 | 2145 | 4x4 | LTE B66 | 20 | 66984 | 2164.8 | 4x4 | 25.10 | 25.10 |

## 1.4.3 LTE Band 12 as PCC

**Table 14**
**Maximum Output Powers**

| | PCC | | | | | | | | | | SCC 1 | | | | | SCC 2 | | | | | SCC 3 | | | | | SCC 4 | | | | | Power | |
|---|---|---|---|---|---|---|---|---|---|---|---|---|---|---|---|---|---|---|---|---|---|---|---|---|---|---|---|---|---|---|---|---|
| Combination | PCC Band | PCC BW [MHz] | PCC (UL) Ch. | PCC (UL) Freq. [MHz] | Mod. | PCC UL# RB | PCC UL RB Offset | PCC (DL) Ch. | PCC (DL) Freq. [MHz] | DL Ant. Config. | SCC Band | SCC BW [MHz] | SCC (DL) Ch. | SCC (DL) Freq. [MHz] | DL Ant. Config. | SCC Band | SCC BW [MHz] | SCC (DL) Ch. | SCC (DL) Freq. [MHz] | DL Ant. Config. | SCC Band | SCC BW [MHz] | SCC (DL) Ch. | SCC (DL) Freq. [MHz] | DL Ant. Config. | SCC Band | SCC BW [MHz] | SCC (DL) Ch. | SCC (DL) Freq. [MHz] | DL Ant. Config. | LTE Tx.Power with DL CA Enabled | LTE Single Carrier Tx Power (dBm) |
| CA_[2A]-12A (1) | LTE B12 | 10 | 23095 | 707.5 | QPSK | 1 | 25 | 5095 | 737.5 | 2x2 | LTE B2 | 20 | 900 | 1960 | 4x4 | - | - | - | - | - | - | - | - | - | - | - | - | - | - | - | 25.17 | 25.16 |
| CA_[4A]-12A (1) | LTE B12 | 10 | 23095 | 707.5 | QPSK | 1 | 25 | 5095 | 737.5 | 2x2 | LTE B4 | 20 | 2175 | 2132.5 | 4x4 | - | - | - | - | - | - | - | - | - | - | - | - | - | - | - | 25.21 | 25.16 |
| CA_[4A]-12A (2) | LTE B12 | 10 | 23095 | 707.5 | QPSK | 1 | 25 | 5095 | 737.5 | 2x2 | LTE B4 | 20 | 2175 | 2132.5 | 4x4 | - | - | - | - | - | - | - | - | - | - | - | - | - | - | - | 25.21 | 25.16 |
| CA_[12A-66A] (1) | LTE B12 | 10 | 23095 | 707.5 | QPSK | 1 | 25 | 5095 | 737.5 | 2x2 | LTE B66 | 20 | 66786 | 2145 | 4x4 | - | - | - | - | - | - | - | - | - | - | - | - | - | - | - | 25.23 | 25.16 |
| CA_[12A-66A] (2) | LTE B12 | 10 | 23095 | 707.5 | QPSK | 1 | 25 | 5095 | 737.5 | 2x2 | LTE B66 | 20 | 66786 | 2145 | 4x4 | - | - | - | - | - | - | - | - | - | - | - | - | - | - | - | 25.23 | 25.16 |
| CA_[2A]-2A-4A-12A | LTE B12 | 10 | 23095 | 707.5 | QPSK | 1 | 25 | 5095 | 737.5 | 2x2 | LTE B2 | 20 | 900 | 1960 | 4x4 | LTE B2 | 20 | 700 | 1940 | 2x2 | LTE B4 | 20 | 2175 | 2132.5 | 2x2 | - | - | - | - | - | 25.12 | 25.16 |
| CA_2A-2A-[4A]-12A | LTE B12 | 10 | 23095 | 707.5 | QPSK | 1 | 25 | 5095 | 737.5 | 2x2 | LTE B2 | 20 | 900 | 1960 | 2x2 | LTE B2 | 20 | 700 | 1940 | 2x2 | LTE B4 | 20 | 2175 | 2132.5 | 4x4 | - | - | - | - | - | 25.15 | 25.16 |
| CA_[2A]-[2A]-4A-12A | LTE B12 | 10 | 23095 | 707.5 | QPSK | 1 | 25 | 5095 | 737.5 | 2x2 | LTE B2 | 20 | 900 | 1960 | 4x4 | LTE B2 | 20 | 700 | 1940 | 4x4 | LTE B4 | 20 | 2175 | 2132.5 | 2x2 | - | - | - | - | - | 25.14 | 25.16 |
| CA_[2A]-2A-[4A]-12A | LTE B12 | 10 | 23095 | 707.5 | QPSK | 1 | 25 | 5095 | 737.5 | 2x2 | LTE B2 | 20 | 900 | 1960 | 4x4 | LTE B2 | 20 | 700 | 1940 | 2x2 | LTE B4 | 20 | 2175 | 2132.5 | 4x4 | - | - | - | - | - | 25.13 | 25.16 |
| CA_[2A]-[2A]-[4A]-12A | LTE B12 | 10 | 23095 | 707.5 | QPSK | 1 | 25 | 5095 | 737.5 | 2x2 | LTE B2 | 20 | 900 | 1960 | 4x4 | LTE B2 | 20 | 700 | 1940 | 4x4 | LTE B4 | 20 | 2175 | 2132.5 | 4x4 | - | - | - | - | - | 25.10 | 25.16 |
| CA_[2A]-4A-4A-12A | LTE B12 | 10 | 23095 | 707.5 | QPSK | 1 | 25 | 5095 | 737.5 | 2x2 | LTE B2 | 20 | 900 | 1960 | 4x4 | LTE B4 | 20 | 2175 | 2132.5 | 2x2 | LTE B4 | 10 | 2350 | 2150 | 2x2 | - | - | - | - | - | 25.18 | 25.16 |
| CA_2A-[4A]-4A-12A | LTE B12 | 10 | 23095 | 707.5 | QPSK | 1 | 25 | 5095 | 737.5 | 2x2 | LTE B2 | 20 | 900 | 1960 | 2x2 | LTE B4 | 20 | 2175 | 2132.5 | 4x4 | LTE B4 | 10 | 2350 | 2150 | 2x2 | - | - | - | - | - | 25.14 | 25.16 |
| CA_[2A]-[4A]-4A-12A | LTE B12 | 10 | 23095 | 707.5 | QPSK | 1 | 25 | 5095 | 737.5 | 2x2 | LTE B2 | 20 | 900 | 1960 | 4x4 | LTE B4 | 20 | 2175 | 2132.5 | 4x4 | LTE B4 | 10 | 2350 | 2150 | 2x2 | - | - | - | - | - | 25.17 | 25.16 |
| CA_2A-[4A]-[4A]-12A | LTE B12 | 10 | 23095 | 707.5 | QPSK | 1 | 25 | 5095 | 737.5 | 2x2 | LTE B2 | 20 | 900 | 1960 | 2x2 | LTE B4 | 20 | 2175 | 2132.5 | 4x4 | LTE B4 | 10 | 2350 | 2150 | 4x4 | - | - | - | - | - | 25.15 | 25.16 |
| CA_[2A]-[4A]-[4A]-12A | LTE B12 | 10 | 23095 | 707.5 | QPSK | 1 | 25 | 5095 | 737.5 | 2x2 | LTE B2 | 20 | 900 | 1960 | 4x4 | LTE B4 | 20 | 2175 | 2132.5 | 4x4 | LTE B4 | 10 | 2350 | 2150 | 4x4 | - | - | - | - | - | 25.23 | 25.16 |
| CA_[2A]-4A-12B | LTE B12 | 5 | 23095 | 707.5 | QPSK | 1 | 12 | 5095 | 737.5 | 2x2 | LTE B12 | 5 | 5047 | 732.7 | 2x2 | LTE B2 | 20 | 900 | 1960 | 4x4 | LTE B4 | 20 | 2175 | 2132.5 | 2x2 | - | - | - | - | - | 25.13 | 25.07 |
| CA_2A-[4A]-12B | LTE B12 | 5 | 23095 | 707.5 | QPSK | 1 | 12 | 5095 | 737.5 | 2x2 | LTE B12 | 5 | 5047 | 732.7 | 2x2 | LTE B2 | 20 | 900 | 1960 | 2x2 | LTE B4 | 20 | 2175 | 2132.5 | 4x4 | - | - | - | - | - | 25.17 | 25.07 |
| CA_[2A]-[4A]-12B | LTE B12 | 5 | 23095 | 707.5 | QPSK | 1 | 12 | 5095 | 737.5 | 2x2 | LTE B12 | 5 | 5047 | 732.7 | 2x2 | LTE B2 | 20 | 900 | 1960 | 4x4 | LTE B4 | 20 | 2175 | 2132.5 | 4x4 | - | - | - | - | - | 25.18 | 25.07 |
| CA_[2A]-12A-66C | LTE B12 | 10 | 23095 | 707.5 | QPSK | 1 | 25 | 5095 | 737.5 | 2x2 | LTE B2 | 20 | 900 | 1960 | 4x4 | LTE B66 | 20 | 66786 | 2145 | 2x2 | LTE B66 | 20 | 66984 | 2164.8 | 2x2 | - | - | - | - | - | 25.11 | 25.16 |
| CA_2A-12A-[66C] | LTE B12 | 10 | 23095 | 707.5 | QPSK | 1 | 25 | 5095 | 737.5 | 2x2 | LTE B2 | 20 | 900 | 1960 | 2x2 | LTE B66 | 20 | 66786 | 2145 | 4x4 | LTE B66 | 20 | 66984 | 2164.8 | 4x4 | - | - | - | - | - | 25.12 | 25.16 |
| CA_[2A]-12A-[66C] | LTE B12 | 10 | 23095 | 707.5 | QPSK | 1 | 25 | 5095 | 737.5 | 2x2 | LTE B2 | 20 | 900 | 1960 | 4x4 | LTE B66 | 20 | 66786 | 2145 | 4x4 | LTE B66 | 20 | 66984 | 2164.8 | 4x4 | - | - | - | - | - | 25.09 | 25.16 |
| CA_[4A]-4A-12B | LTE B12 | 5 | 23095 | 707.5 | QPSK | 1 | 12 | 5095 | 737.5 | 2x2 | LTE B12 | 5 | 5047 | 732.7 | 2x2 | LTE B4 | 20 | 2175 | 2132.5 | 4x4 | LTE B4 | 10 | 2350 | 2150 | 2x2 | - | - | - | - | - | 25.13 | 25.07 |
| CA_[4A]-[4A]-12B | LTE B12 | 5 | 23095 | 707.5 | QPSK | 1 | 12 | 5095 | 737.5 | 2x2 | LTE B12 | 5 | 5047 | 732.7 | 2x2 | LTE B4 | 20 | 2175 | 2132.5 | 4x4 | LTE B4 | 10 | 2350 | 2150 | 4x4 | - | - | - | - | - | 25.11 | 25.07 |
| CA_[2A]-2A-12A-30A-66A | LTE B12 | 10 | 23095 | 707.5 | QPSK | 1 | 25 | 5095 | 737.5 | 2x2 | LTE B2 | 20 | 900 | 1960 | 4x4 | LTE B2 | 20 | 700 | 1940 | 2x2 | LTE B30 | 10 | 9820 | 2355 | 2x2 | LTE B66 | 20 | 66786 | 2145 | 2x2 | 25.18 | 25.16 |
| CA_2A-2A-12A-[30A]-66A | LTE B12 | 10 | 23095 | 707.5 | QPSK | 1 | 25 | 5095 | 737.5 | 2x2 | LTE B2 | 20 | 900 | 1960 | 2x2 | LTE B2 | 20 | 700 | 1940 | 2x2 | LTE B30 | 10 | 9820 | 2355 | 4x4 | LTE B66 | 20 | 66786 | 2145 | 2x2 | 25.14 | 25.16 |
| CA_2A-2A-12A-30A-[66A] | LTE B12 | 10 | 23095 | 707.5 | QPSK | 1 | 25 | 5095 | 737.5 | 2x2 | LTE B2 | 20 | 900 | 1960 | 2x2 | LTE B2 | 20 | 700 | 1940 | 2x2 | LTE B30 | 10 | 9820 | 2355 | 2x2 | LTE B66 | 20 | 66786 | 2145 | 4x4 | 25.17 | 25.16 |
| CA_[2A]-[2A]-12A-30A-66A | LTE B12 | 10 | 23095 | 707.5 | QPSK | 1 | 25 | 5095 | 737.5 | 2x2 | LTE B2 | 20 | 900 | 1960 | 4x4 | LTE B2 | 20 | 700 | 1940 | 4x4 | LTE B30 | 10 | 9820 | 2355 | 2x2 | LTE B66 | 20 | 66786 | 2145 | 2x2 | 25.15 | 25.16 |
| CA_[2A]-2A-12A-[30A]-66A | LTE B12 | 10 | 23095 | 707.5 | QPSK | 1 | 25 | 5095 | 737.5 | 2x2 | LTE B2 | 20 | 900 | 1960 | 4x4 | LTE B2 | 20 | 700 | 1940 | 2x2 | LTE B30 | 10 | 9820 | 2355 | 4x4 | LTE B66 | 20 | 66786 | 2145 | 2x2 | 25.19 | 25.16 |
| CA_[2A]-2A-12A-30A-[66A] | LTE B12 | 10 | 23095 | 707.5 | QPSK | 1 | 25 | 5095 | 737.5 | 2x2 | LTE B2 | 20 | 900 | 1960 | 4x4 | LTE B2 | 20 | 700 | 1940 | 2x2 | LTE B30 | 10 | 9820 | 2355 | 2x2 | LTE B66 | 20 | 66786 | 2145 | 4x4 | 25.16 | 25.16 |
| CA_2A-2A-12A-[30A]-[66A] | LTE B12 | 10 | 23095 | 707.5 | QPSK | 1 | 25 | 5095 | 737.5 | 2x2 | LTE B2 | 20 | 900 | 1960 | 2x2 | LTE B2 | 20 | 700 | 1940 | 2x2 | LTE B30 | 10 | 9820 | 2355 | 4x4 | LTE B66 | 20 | 66786 | 2145 | 4x4 | 25.24 | 25.16 |
| CA_[2A]-[2A]-12A-[30A]-66A | LTE B12 | 10 | 23095 | 707.5 | QPSK | 1 | 25 | 5095 | 737.5 | 2x2 | LTE B2 | 20 | 900 | 1960 | 4x4 | LTE B2 | 20 | 700 | 1940 | 4x4 | LTE B30 | 10 | 9820 | 2355 | 4x4 | LTE B66 | 20 | 66786 | 2145 | 2x2 | 25.22 | 25.16 |
| CA_[2A]-2A-12A-[30A]-[66A] | LTE B12 | 10 | 23095 | 707.5 | QPSK | 1 | 25 | 5095 | 737.5 | 2x2 | LTE B2 | 20 | 900 | 1960 | 4x4 | LTE B2 | 20 | 700 | 1940 | 2x2 | LTE B30 | 10 | 9820 | 2355 | 2x2 | LTE B66 | 20 | 66786 | 2145 | 4x4 | 25.17 | 25.16 |
| CA_[2A]-[2A]-12A-[30A]-[66A] | LTE B12 | 10 | 23095 | 707.5 | QPSK | 1 | 25 | 5095 | 737.5 | 2x2 | LTE B2 | 20 | 900 | 1960 | 4x4 | LTE B2 | 20 | 700 | 1940 | 4x4 | LTE B30 | 10 | 9820 | 2355 | 4x4 | LTE B66 | 20 | 66786 | 2145 | 4x4 | 25.20 | 25.16 |
| CA_[2A]-2A-12B-66A | LTE B12 | 5 | 23095 | 707.5 | QPSK | 1 | 12 | 5095 | 737.5 | 2x2 | LTE B12 | 5 | 5047 | 732.7 | 2x2 | LTE B2 | 20 | 900 | 1960 | 4x4 | LTE B2 | 20 | 700 | 1940 | 2x2 | LTE B66 | 20 | 66786 | 2145 | 2x2 | 25.05 | 25.07 |
| CA_2A-2A-12B-[66A] | LTE B12 | 5 | 23095 | 707.5 | QPSK | 1 | 12 | 5095 | 737.5 | 2x2 | LTE B12 | 5 | 5047 | 732.7 | 2x2 | LTE B2 | 20 | 900 | 1960 | 2x2 | LTE B2 | 20 | 700 | 1940 | 2x2 | LTE B66 | 20 | 66786 | 2145 | 4x4 | 25.06 | 25.07 |
| CA_[2A]-[2A]-12B-66A | LTE B12 | 5 | 23095 | 707.5 | QPSK | 1 | 12 | 5095 | 737.5 | 2x2 | LTE B12 | 5 | 5047 | 732.7 | 2x2 | LTE B2 | 20 | 900 | 1960 | 4x4 | LTE B2 | 20 | 700 | 1940 | 4x4 | LTE B66 | 20 | 66786 | 2145 | 2x2 | 25.07 | 25.07 |
| CA_[2A]-2A-[4A]-12B-[66A] | LTE B12 | 5 | 23095 | 707.5 | QPSK | 1 | 12 | 5095 | 737.5 | 2x2 | LTE B12 | 5 | 5047 | 732.7 | 2x2 | LTE B2 | 20 | 900 | 1960 | 4x4 | LTE B2 | 20 | 700 | 1940 | 2x2 | LTE B66 | 20 | 66786 | 2145 | 4x4 | 25.05 | 25.07 |
| CA_[2A]-[2A]-[4A]-12B-[66A] | LTE B12 | 5 | 23095 | 707.5 | QPSK | 1 | 12 | 5095 | 737.5 | 2x2 | LTE B12 | 5 | 5047 | 732.7 | 2x2 | LTE B2 | 20 | 900 | 1960 | 4x4 | LTE B2 | 20 | 700 | 1940 | 4x4 | LTE B66 | 20 | 66786 | 2145 | 4x4 | 24.99 | 25.07 |
| CA_[2A]-12A-30A-66A-66A | LTE B12 | 10 | 23095 | 707.5 | QPSK | 1 | 25 | 5095 | 737.5 | 2x2 | LTE B2 | 20 | 900 | 1960 | 4x4 | LTE B30 | 10 | 9820 | 2355 | 2x2 | LTE B66 | 20 | 66786 | 2145 | 2x2 | LTE B66 | 20 | 67236 | 2190 | 2x2 | 25.21 | 25.16 |
| CA_2A-12A-[30A]-66A-66A | LTE B12 | 10 | 23095 | 707.5 | QPSK | 1 | 25 | 5095 | 737.5 | 2x2 | LTE B2 | 20 | 900 | 1960 | 2x2 | LTE B30 | 10 | 9820 | 2355 | 4x4 | LTE B66 | 20 | 66786 | 2145 | 2x2 | LTE B66 | 20 | 67236 | 2190 | 2x2 | 25.23 | 25.16 |
| CA_2A-12A-30A-[66A]-66A | LTE B12 | 10 | 23095 | 707.5 | QPSK | 1 | 25 | 5095 | 737.5 | 2x2 | LTE B2 | 20 | 900 | 1960 | 2x2 | LTE B30 | 10 | 9820 | 2355 | 2x2 | LTE B66 | 20 | 66786 | 2145 | 4x4 | LTE B66 | 20 | 67236 | 2190 | 2x2 | 25.18 | 25.16 |
| CA_2A-12A-30A-66A-[66A] | LTE B12 | 10 | 23095 | 707.5 | QPSK | 1 | 25 | 5095 | 737.5 | 2x2 | LTE B2 | 20 | 900 | 1960 | 2x2 | LTE B30 | 10 | 9820 | 2355 | 4x4 | LTE B66 | 20 | 66786 | 2145 | 2x2 | LTE B66 | 20 | 67236 | 2190 | 2x2 | 25.21 | 25.16 |
| CA_[2A]-12A-[30A]-66A-66A | LTE B12 | 10 | 23095 | 707.5 | QPSK | 1 | 25 | 5095 | 737.5 | 2x2 | LTE B2 | 20 | 900 | 1960 | 4x4 | LTE B30 | 10 | 9820 | 2355 | 2x2 | LTE B66 | 20 | 66786 | 2145 | 2x2 | LTE B66 | 20 | 67236 | 2190 | 2x2 | 25.21 | 25.16 |
| CA_[2A]-12A-30A-[66A]-66A | LTE B12 | 10 | 23095 | 707.5 | QPSK | 1 | 25 | 5095 | 737.5 | 2x2 | LTE B2 | 20 | 900 | 1960 | 4x4 | LTE B30 | 10 | 9820 | 2355 | 2x2 | LTE B66 | 20 | 66786 | 2145 | 4x4 | LTE B66 | 20 | 67236 | 2190 | 2x2 | 25.17 | 25.16 |
| CA_2A-12A-[30A]-[66A]-66A | LTE B12 | 10 | 23095 | 707.5 | QPSK | 1 | 25 | 5095 | 737.5 | 2x2 | LTE B2 | 20 | 900 | 1960 | 2x2 | LTE B30 | 10 | 9820 | 2355 | 4x4 | LTE B66 | 20 | 66786 | 2145 | 4x4 | LTE B66 | 20 | 67236 | 2190 | 4x4 | 25.24 | 25.16 |
| CA_[2A]-12A-[30A]-[66A]-66A | LTE B12 | 10 | 23095 | 707.5 | QPSK | 1 | 25 | 5095 | 737.5 | 2x2 | LTE B2 | 20 | 900 | 1960 | 4x4 | LTE B30 | 10 | 9820 | 2355 | 4x4 | LTE B66 | 20 | 66786 | 2145 | 4x4 | LTE B66 | 20 | 67236 | 2190 | 4x4 | 25.21 | 25.16 |
| CA_[2A]-12B-66A-66A | LTE B12 | 5 | 23095 | 707.5 | QPSK | 1 | 12 | 5095 | 737.5 | 2x2 | LTE B12 | 5 | 5047 | 732.7 | 2x2 | LTE B2 | 20 | 900 | 1960 | 4x4 | LTE B66 | 20 | 66786 | 2145 | 2x2 | LTE B66 | 20 | 67236 | 2190 | 2x2 | 25.03 | 25.07 |
| CA_2A-12B-[66A]-66A | LTE B12 | 5 | 23095 | 707.5 | QPSK | 1 | 12 | 5095 | 737.5 | 2x2 | LTE B12 | 5 | 5047 | 732.7 | 2x2 | LTE B2 | 20 | 900 | 1960 | 2x2 | LTE B66 | 20 | 66786 | 2145 | 4x4 | LTE B66 | 20 | 67236 | 2190 | 2x2 | 25.04 | 25.07 |
| CA_[2A]-12B-[66A]-66A | LTE B12 | 5 | 23095 | 707.5 | QPSK | 1 | 12 | 5095 | 737.5 | 2x2 | LTE B12 | 5 | 5047 | 732.7 | 2x2 | LTE B2 | 20 | 900 | 1960 | 4x4 | LTE B66 | 20 | 66786 | 2145 | 4x4 | LTE B66 | 20 | 67236 | 2190 | 2x2 | 25.02 | 25.07 |
| CA_2A-12B-[66A]-[66A] | LTE B12 | 5 | 23095 | 707.5 | QPSK | 1 | 12 | 5095 | 737.5 | 2x2 | LTE B12 | 5 | 5047 | 732.7 | 2x2 | LTE B2 | 20 | 900 | 1960 | 2x2 | LTE B66 | 20 | 66786 | 2145 | 4x4 | LTE B66 | 20 | 67236 | 2190 | 4x4 | 25.08 | 25.07 |
| CA_[2A]-12B-[66A]-[66A] | LTE B12 | 5 | 23095 | 707.5 | QPSK | 1 | 12 | 5095 | 737.5 | 2x2 | LTE B12 | 5 | 5047 | 732.7 | 2x2 | LTE B2 | 20 | 900 | 1960 | 4x4 | LTE B66 | 20 | 66786 | 2145 | 4x4 | LTE B66 | 20 | 67236 | 2190 | 4x4 | 25.05 | 25.07 |



© 2020 PCTEST

## 1.4.4 LTE Band 13 as PCC

**Table 15**
**Maximum Output Powers**

| Combination | PCC | | | | | | | | | SCC 1 | | | | | SCC 2 | | | | | SCC 3 | | | | | SCC 4 | | | | | SCC 5 | | | | | SCC 6 | | | | | Power |
|---|---|---|---|---|---|---|---|---|---|---|---|---|---|---|---|---|---|---|---|---|---|---|---|---|---|---|---|---|---|---|---|---|---|---|---|---|---|---|---|---|
| | PCC Band | PCC BW [MHz] | PCC (UL) Ch. | PCC (UL) Freq. [MHz] | Mod. | PCC UL# RB | PCC UL# RB Offset | PCC (DL) Ch. | PCC (DL) Freq. [MHz] | DL Ant. Config. | SCC Band | SCC BW [MHz] | SCC (DL) Ch. | S

## 1.4.6 LTE Band 5 as PCC

**Table 17**
**Maximum Output Powers**

| | PCC | | | | | | | | | SCC 1 | | | | | SCC 2 | | | | | SCC 3 | | | | | SCC 4 | | | | | SCC 5 | | | | | SCC 6 | | | | | Power | |
|---|---|---|---|---|---|---|---|---|---|---|---|---|---|---|---|---|---|---|---|---|---|---|---|---|---|---|---|---|---|---|---|---|---|---|---|---|---|---|---|---|---|
| Combination | PCC Band | PCC BW [MHz] | PCC (UL) Ch. | PCC (UL) Freq. [MHz] | Mod. | PCC USP RB | PCC UL RB Offset | PCC (DL) Ch. | PCC (DL) Freq. [MHz] | DL Ant. Config. | SCC Band | SCC BW [MHz] | SCC (DL) Ch. | SCC (DL) Freq. [MHz] | DL Ant. Config. | SCC Band | SCC BW [MHz] | SCC (DL) Ch. | SCC (DL) Freq. [MHz] | DL Ant. Config. | SCC Band | SCC BW [MHz] | SCC (DL) Ch. | SCC (DL) Freq. [MHz] | DL Ant. Config. | SCC Band | SCC BW [MHz] | SCC (DL) Ch. | SCC (DL) Freq. [MHz] | DL Ant. Config. | SCC Band | SCC BW [MHz] | SCC (DL) Ch. | SCC (DL) Freq. [MHz] | DL Ant. Config. | SCC Band | SCC BW [MHz] | SCC (DL) Ch. | SCC (DL) Freq. [MHz] | DL Ant. Config. | LTE Tx-Power with DL CA [dBm] | LTE Single Carrier Tx Power [dBm] |
| CA_5A-(25A) | LTE B5 | 5 | 20525 | 836.5 | QPSK | 1 | 12 | 2525 | 881.5 | 2x2 | LTE B25 | 20 | 8365 | 1962.5 | 4x4 | - | - | - | - | - | - | - | - | - | - | - | - | - | - | - | - | - | - | - | - | - | - | - | - | - | 24.99 | 25.11 |
| CA_(2A)-5A-48A | LTE B5 | 5 | 20525 | 836.5 | QPSK | 1 | 12 | 2525 | 881.5 | 2x2 | LTE B2 | 20 | 900 | 1960 | 4x4 | LTE B48 | 20 | 55665 | 5537.5 | 2x2 | - | - | - | - | - | - | - | - | - | - | - | - | - | - | - | - | - | - | - | - | 25.04 | 25.11 |
| CA_5A-48A-(66A) | LTE B5 | 5 | 20525 | 836.5 | QPSK | 1 | 12 | 2525 | 881.5 | 2x2 | LTE B48 | 20 | 55665 | 5537.5 | 2x2 | LTE B48 | 20 | 66786 | 2145 | 4x4 | - | - | - | - | - | - | - | - | - | - | - | - | - | - | - | - | - | - | - | - | 25.00 | 25.11 |
| CA_(2A)-5A-4A-5A | LTE B5 | 5 | 20525 | 836.5 | QPSK | 1 | 12 | 2525 | 881.5 | 2x2 | LTE B2 | 20 | 900 | 1960 | 4x4 | LTE B4 | 20 | 700 | 1940 | 2x2 | LTE B4 | 20 | 2175 | 2132.5 | 2x2 | - | - | - | - | - | - | - | - | - | - | - | - | - | - | - | - | 25.07 | 25.11 |
| CA_2A-2A-(4A)-5A | LTE B5 | 5 | 20525 | 836.5 | QPSK | 1 | 12 | 2525 | 881.5 | 2x2 | LTE B2 | 20 | 900 | 1960 | 2x2 | LTE B2 | 20 | 700 | 1940 | 2x2 | LTE B4 | 20 | 2175 | 2132.5 | 4x4 | - | - | - | - | - | - | - | - | - | - | - | - | - | - | - | - | 25.04 | 25.11 |
| CA_(2A)-(2A)-4A-5A | LTE B5 | 5 | 20525 | 836.5 | QPSK | 1 | 12 | 2525 | 881.5 | 2x2 | LTE B2 | 20 | 900 | 1960 | 4x4 | LTE B2 | 20 | 700 | 1940 | 4x4 | LTE B4 | 20 | 2175 | 2132.5 | 2x2 | - | - | - | - | - | - | - | - | - | - | - | - | - | - | - | - | 25.03 | 25.11 |
| CA_(2A)-(2A)-(4A)-5A | LTE B5 | 5 | 20525 | 836.5 | QPSK | 1 | 12 | 2525 | 881.5 | 2x2 | LTE B2 | 20 | 900 | 1960 | 4x4 | LTE B2 | 20 | 700 | 1940 | 4x4 | LTE B4 | 20 | 2175 | 2132.5 | 4x4 | - | - | - | - | - | - | - | - | - | - | - | - | - | - | - | - | 25.06 | 25.11 |
| CA_(2A)-(4A)-4A-5A | LTE B5 | 5 | 20525 | 836.5 | QPSK | 1 | 12 | 2525 | 881.5 | 2x2 | LTE B2 | 20 | 900 | 1960 | 4x4 | LTE B4 | 20 | 2175 | 2132.5 | 4x4 | LTE B4 | 10 | 2350 | 2150 | 2x2 | - | - | - | - | - | - | - | - | - | - | - | - | - | - | - | - | 25.05 | 25.11 |
| CA_2A-(4A)-(4A)-5A | LTE B5 | 5 | 20525 | 836.5 | QPSK | 1 | 12 | 2525 | 881.5 | 2x2 | LTE B2 | 20 | 900 | 1960 | 2x2 | LTE B4 | 20 | 2175 | 2132.5 | 4x4 | LTE B4 | 10 | 2350 | 2150 | 4x4 | - | - | - | - | - | - | - | - | - | - | - | - | - | - | - | - | 25.08 | 25.11 |
| CA_(2A)-(4A)-(4A)-5A | LTE B5 | 5 | 20525 | 836.5 | QPSK | 1 | 12 | 2525 | 881.5 | 2x2 | LTE B2 | 20 | 900 | 1960 | 4x4 | LTE B4 | 20 | 2175 | 2132.5 | 4x4 | LTE B4 | 10 | 2350 | 2150 | 4x4 | - | - | - | - | - | - | - | - | - | - | - | - | - | - | - | - | 25.07 | 25.11 |
| CA_(2A)-(4A)-4A-5A | LTE B5 | 5 | 20525 | 836.5 | QPSK | 1 | 12 | 2525 | 881.5 | 2x2 | LTE B2 | 20 | 900 | 1960 | 4x4 | LTE B4 | 20 | 2175 | 2132.5 | 4x4 | LTE B4 | 10 | 2350 | 2150 | 4x4 | - | - | - | - | - | - | - | - | - | - | - | - | - | - | - | - | 25.08 | 25.11 |
| CA_2A-(4A)-5B | LTE B5 | 5 | 20525 | 836.5 | QPSK | 1 | 12 | 2525 | 881.5 | 2x2 | LTE B5 | 10 | 2453 | 874.3 | 2x2 | LTE B2 | 20 | 900 | 1960 | 2x2 | LTE B4 | 20 | 2175 | 2132.5 | 4x4 | - | - | - | - | - | - | - | - | - | - | - | - | - | - | - | - | 25.04 | 25.11 |
| CA_(2A)-(4A)-5B | LTE B5 | 5 | 20525 | 836.5 | QPSK | 1 | 12 | 2525 | 881.5 | 2x2 | LTE B5 | 10 | 2453 | 874.3 | 2x2 | LTE B2 | 20 | 900 | 1960 | 4x4 | LTE B4 | 20 | 2175 | 2132.5 | 4x4 | - | - | - | - | - | - | - | - | - | - | - | - | - | - | - | - | 25.10 | 25.11 |
| CA_(2A)-5A-46C | LTE B5 | 5 | 20525 | 836.5 | QPSK | 1 | 12 | 2525 | 881.5 | 2x2 | LTE B2 | 20 | 900 | 1960 | 4x4 | LTE B46 | 20 | 55665 | 5537.5 | 2x2 | LTE B46 | 20 | 50467 | 5517.7 | 2x2 | - | - | - | - | - | - | - | - | - | - | - | - | - | - | - | - | 25.05 | 25.11 |
| CA_(4A)-4A-5B | LTE B5 | 5 | 20525 | 836.5 | QPSK | 1 | 12 | 2525 | 881.5 | 2x2 | LTE B5 | 10 | 2453 | 874.3 | 2x2 | LTE B4 | 20 | 2175 | 2132.5 | 4x4 | LTE B4 | 10 | 2350 | 2150 | 2x2 | - | - | - | - | - | - | - | - | - | - | - | - | - | - | - | - | 25.05 | 25.11 |
| CA_(4A)-(4A)-5B | LTE B5 | 5 | 20525 | 836.5 | QPSK | 1 | 12 | 2525 | 881.5 | 2x2 | LTE B5 | 10 | 2453 | 874.3 | 2x2 | LTE B4 | 20 | 2175 | 2132.5 | 4x4 | LTE B4 | 10 | 2350 | 2150 | 4x4 | - | - | - | - | - | - | - | - | - | - | - | - | - | - | - | - | 25.09 | 25.11 |
| CA_5A-5A-(66B) | LTE B5 | 5 | 20525 | 836.5 | QPSK | 1 | 12 | 2525 | 881.5 | 2x2 | LTE B2 | 20 | 900 | 1960 | 2x2 | LTE B66 | 15 | 66786 | 2145 | 4x4 | LTE B66 | 5 | 66879 | 2154.3 | 4x4 | - | - | - | - | - | - | - | - | - | - | - | - | - | - | - | - | 25.06 | 25.11 |
| CA_5A-5A-(66C) | LTE B5 | 5 | 20525 | 836.5 | QPSK | 1 | 12 | 2525 | 881.5 | 2x2 | LTE B2 | 20 | 900 | 1960 | 4x4 | LTE B66 | 20 | 66886 | 2154.1 | 4x4 | - | - | - | - | - | - | - | - | - | - | - | - | - | - | - | - | - | - | - | - | - | 25.07 | 25.11 |
| CA_5A-46C-(66A) | LTE B5 | 5 | 20525 | 836.5 | QPSK | 1 | 12 | 2525 | 881.5 | 2x2 | LTE B46 | 20 | 55665 | 5537.5 | 2x2 | LTE B46 | 20 | 50467 | 5517.7 | 2x2 | LTE B66 | 20 | 66786 | 2145 | 4x4 | - | - | - | - | - | - | - | - | - | - | - | - | - | - | - | - | 25.05 | 25.11 |
| CA_(2A)-(2A)-5A-30A-66A | LTE B5 | 5 | 20525 | 836.5 | QPSK | 1 | 12 | 2525 | 881.5 | 2x2 | LTE B2 | 20 | 900 | 1960 | 4x4 | LTE B2 | 20 | 700 | 1940 | 2x2 | LTE B30 | 10 | 9820 | 2355 | 2x2 | LTE B66 | 20 | 66786 | 2145 | 2x2 | - | - | - | - | - | - | - | - | - | - | - | - | 25.05 | 25.11 |
| CA_2A-2A-5A-(30A)-66A | LTE B5 | 5 | 20525 | 836.5 | QPSK | 1 | 12 | 2525 | 881.5 | 2x2 | LTE B2 | 20 | 900 | 1960 | 2x2 | LTE B2 | 20 | 700 | 1940 | 2x2 | LTE B30 | 10 | 9820 | 2355 | 4x4 | LTE B66 | 20 | 66786 | 2145 | 2x2 | - | - | - | - | - | - | - | - | - | - | - | - | 25.08 | 25.11 |
| CA_2A-(2A)-5A-30A-66A | LTE B5 | 5 | 20525 | 836.5 | QPSK | 1 | 12 | 2525 | 881.5 | 2x2 | LTE B2 | 20 | 900 | 1960 | 2x2 | LTE B2 | 20 | 700 | 1940 | 4x4 | LTE B30 | 10 | 9820 | 2355 | 2x2 | LTE B66 | 20 | 66786 | 2145 | 4x4 | - | - | - | - | - | - | - | - | - | - | - | - | 25.03 | 25.11 |
| CA_(2A)-(2A)-5A-30A-66A | LTE B5 | 5 | 20525 | 836.5 | QPSK | 1 | 12 | 2525 | 881.5 | 2x2 | LTE B2 | 20 | 900 | 1960 | 4x4 | LTE B2 | 20 | 700 | 1940 | 4x4 | LTE B30 | 10 | 9820 | 2355 | 4x4 | LTE B66 | 20 | 66786 | 2145 | 4x4 | - | - | - | - | - | - | - | - | - | - | - | - | 25.06 | 25.11 |
| CA_(2A)-2A-5A-(2A)-66A | LTE B5 | 5 | 20525 | 836.5 | QPSK | 1 | 12 | 2525 | 881.5 | 2x2 | LTE B2 | 20 | 900 | 1960 | 4x4 | LTE B2 | 20 | 700 | 1940 | 2x2 | LTE B30 | 10 | 9820 | 2355 | 2x2 | LTE B66 | 20 | 66786 | 2145 | 2x2 | - | - | - | - | - | - | - | - | - | - | - | - | 25.07 | 25.11 |
| CA_2A-2A-5A-30A-66A | LTE B5 | 5 | 20525 | 836.5 | QPSK | 1 | 12 | 2525 | 881.5 | 2x2 | LTE B2 | 20 | 900 | 1960 | 2x2 | LTE B2 | 20 | 700 | 1940 | 2x2 | LTE B30 | 10 | 9820 | 2355 | 4x4 | LTE B66 | 20 | 66786 | 2145 | 2x2 | - | - | - | - | - | - | - | - | - | - | - | - | 25.08 | 25.11 |
| CA_(2A)-(2A)-5A-30A-66A | LTE B5 | 5 | 20525 | 836.5 | QPSK | 1 | 12 | 2525 | 881.5 | 2x2 | LTE B2 | 20 | 900 | 1960 | 2x2 | LTE B2 | 20 | 700 | 1940 | 4x4 | LTE B30 | 10 | 9820 | 2355 | 4x4 | LTE B66 | 20 | 66786 | 2145 | 4x4 | - | - | - | - | - | - | - | - | - | - | - | - | 25.07 | 25.11 |
| CA_2A-(2A)-5A-(30A)-66A | LTE B5 | 5 | 20525 | 836.5 | QPSK | 1 | 12 | 2525 | 881.5 | 2x2 | LTE B2 | 20 | 900 | 1960 | 2x2 | LTE B2 | 20 | 700 | 1940 | 4x4 | LTE B30 | 10 | 9820 | 2355 | 4x4 | LTE B66 | 20 | 66786 | 2145 | 4x4 | - | - | - | - | - | - | - | - | - | - | - | - | 25.09 | 25.11 |
| CA_(2A)-(2A)-5A-(30A)-66A | LTE B5 | 5 | 20525 | 836.5 | QPSK | 1 | 12 | 2525 | 881.5 | 2x2 | LTE B2 | 20 | 900 | 1960 | 4x4 | LTE B2 | 20 | 700 | 1940 | 4x4 | LTE B30 | 10 | 9820 | 2355 | 4x4 | LTE B66 | 20 | 66786 | 2145 | 4x4 | - | - | - | - | - | - | - | - | - | - | - | - | 25.08 | 25.11 |
| CA_(2A)-2A-5A-66A | LTE B5 | 5 | 20525 | 836.5 | QPSK | 1 | 12 | 2525 | 881.5 | 2x2 | LTE B2 | 20 | 900 | 1960 | 2x2 | LTE B2 | 20 | 700 | 1940 | 2x2 | LTE B66 | 20 | 66786 | 2145 | 2x2 | LTE B66 | 20 | 67236 | 2190 | 2x2 | - | - | - | - | - | - | - | - | - | - | - | - | 25.07 | 25.11 |
| CA_2A-2A-5A-66A | LTE B5 | 5 | 20525 | 836.5 | QPSK | 1 | 12 | 2525 | 881.5 | 2x2 | LTE B2 | 20 | 900 | 1960 | 2x2 | LTE B2 | 20 | 700 | 1940 | 2x2 | LTE B66 | 20 | 66786 | 2145 | 4x4 | LTE B66 | 20 | 67236 | 2190 | 2x2 | - | - | - | - | - | - | - | - | - | - | - | - | 25.08 | 25.11 |
| CA_(2A)-2A-5A-66A | LTE B5 | 5 | 20525 | 836.5 | QPSK | 1 | 12 | 2525 | 881.5 | 2x2 | LTE B2 | 20 | 900 | 1960 | 2x2 | LTE B2 | 20 | 700 | 1940 | 2x2 | LTE B66 | 20 | 66786 | 2145 | 2x2 | LTE B66 | 20 | 67236 | 2190 | 4x4 | - | - | - | - | - | - | - | - | - | - | - | - | 25.03 | 25.11 |
| CA_2A-(2A)-5A-66A | LTE B5 | 5 | 20525 | 836.5 | QPSK | 1 | 12 | 2525 | 881.5 | 2x2 | LTE B2 | 20 | 900 | 1960 | 2x2 | LTE B2 | 20 | 700 | 1940 | 2x2 | LTE B66 | 20 | 66786 | 2145 | 4x4 | LTE B66 | 20 | 67236 | 2190 | 4x4 | - | - | - | - | - | - | - | - | - | - | - | - | 25.06 | 25.11 |
| CA_(2A)-(2A)-5A-66A | LTE B5 | 5 | 20525 | 836.5 | QPSK | 1 | 12 | 2525 | 881.5 | 2x2 | LTE B2 | 20 | 900 | 1960 | 2x2 | LTE B2 | 20 | 700 | 1940 | 4x4 | LTE B66 | 20 | 66786 | 2145 | 2x2 | LTE B66 | 20 | 67236 | 2190 | 2x2 | - | - | - | - | - | - | - | - | - | - | - | - | 25.05 | 25.11 |
| CA_(2A)-2A-5A-(66A)-66A | LTE B5 | 5 | 20525 | 836.5 | QPSK | 1 | 12 | 2525 | 881.5 | 2x2 | LTE B2 | 20 | 900 | 1960 | 2x2 | LTE B2 | 20 | 700 | 1940 | 4x4 | LTE B66 | 20 | 66786 | 2145 | 4x4 | LTE B66 | 20 | 67236 | 2190 | 4x4 | - | - | - | - | - | - | - | - | - | - | - | - | 25.07 | 25.11 |
| CA_(2A)-(2A)-5A-(66A)-66A | LTE B5 | 5 | 20525 | 836.5 | QPSK | 1 | 12 | 2525 | 881.5 | 2x2 | LTE B2 | 20 | 900 | 1960 | 4x4 | LTE B2 | 20 | 700 | 1940 | 4x4 | LTE B66 | 20 | 66786 | 2145 | 4x4 | LTE B66 | 20 | 67236 | 2190 | 4x4 | - | - | - | - | - | - | - | - | - | - | - | - | 25.08 | 25.11 |
| CA_(2A)-(2A)-5A-66B | LTE B5 | 5 | 20525 | 836.5 | QPSK | 1 | 12 | 2525 | 881.5 | 2x2 | LTE B2 | 20 | 900 | 1960 | 4x4 | LTE B2 | 20 | 700 | 1940 | 2x2 | LTE B66 | 15 | 66786 | 2145 | 2x2 | LTE B66 | 5 | 66879 | 2154.3 | 2x2 | - | - | - | - | - | - | - | - | - | - | - | - | 25.07 | 25.11 |
| CA_2A-2A-5A-(66B) | LTE B5 | 5 | 20525 | 836.5 | QPSK | 1 | 12 | 2525 | 881.5 | 2x2 | LTE B2 | 20 | 900 | 1960 | 2x2 | LTE B2 | 20 | 700 | 1940 | 2x2 | LTE B66 | 15 | 66786 | 2145 | 4x4 | LTE B66 | 5 | 66879 | 2154.3 | 4x4 | - | - | - | - | - | - | - | - | - | - | - | - | 25.06 | 25.11 |
| CA_(2A)-(2A)-5A-66B | LTE B5 | 5 | 20525 | 836.5 | QPSK | 1 | 12 | 2525 | 881.5 | 2x2 | LTE B2 | 20 | 900 | 1960 | 4x4 | LTE B2 | 20 | 700 | 1940 | 4x4 | LTE B66 | 15 | 66786 | 2145 | 2x2 | LTE B66 | 5 | 66879 | 2154.3 | 2x2 | - | - | - | - | - | - | - | - | - | - | - | - | 25.08 | 25.11 |
| CA_(2A)-(2A)-5A-(66B) | LTE B5 | 5 | 20525 | 836.5 | QPSK | 1 | 12 | 2525 | 881.5 | 2x2 | LTE B2 | 20 | 900 | 1960 | 4x4 | LTE B2 | 20 | 700 | 1940 | 4x4 | LTE B66 | 15 | 66786 | 2145 | 4x4 | LTE B66 | 5 | 66879 | 2154.3 | 4x4 | - | - | - | - | - | - | - | - | - | - | - | - | 25.09 | 25.11 |
| CA_(2A)-2A-5A-66C | LTE B5 | 5 | 20525 | 836.5 | QPSK | 1 | 12 | 2525 | 881.5 | 2x2 | LTE B2 | 20 | 900 | 1960 | 2x2 | LTE B2 | 20 | 700 | 1940 | 2x2 | LTE B66 | 20 | 66786 | 2145 | 2x2 | LTE B66 | 20 | 66984 | 2166.8 | 2x2 | - | - | - | - | - | - | - | - | - | - | - | - | 25.05 | 25.11 |
| CA_(2A)-2A-5A-(66C) | LTE B5 | 5 | 20525 | 836.5 | QPSK | 1 | 12 | 2525 | 881.5 | 2x2 | LTE B2 | 20 | 900 | 1960 | 2x2 | LTE B2 | 20 | 700 | 1940 | 2x2 | LTE B66 | 20 | 66786 | 2145 | 4x4 | LTE B66 | 20 | 66984 | 2166.8 | 2x2 | - | - | - | - | - | - | - | - | - | - | - | - | 25.06 | 25.11 |
| CA_(2A)-(2A)-5A-66C | LTE B5 | 5 | 20525 | 836.5 | QPSK | 1 | 12 | 2525 | 881.5 | 2x2 | LTE B2 | 20 | 900 | 1960 | 4x4 | LTE B2 | 20 | 700 | 1940 | 4x4 | LTE B66 | 20 | 66786 | 2145 | 2x2 | LTE B66 | 20 | 66984 | 2166.8 | 2x2 | - | - | - | - | - | - | - | - | - | - | - | - | 25.03 | 25.11 |
| CA_(2A)-(2A)-5A-(66C) | LTE B5 | 5 | 20525 | 836.5 | QPSK | 1 | 12 | 2525 | 881.5 | 2x2 | LTE B2 | 20 | 900 | 1960 | 4x4 | LTE B2 | 20 | 700 | 1940 | 4x4 | LTE B66 | 20 | 66786 | 2145 | 4x4 | LTE B66 | 20 | 66984 | 2166.8 | 4x4 | - | - | - | - | - | - | - | - | - | - | - | - | 25.05 | 25.11 |
| CA_(2A)-(2A)-5A-(66C) | LTE B5 | 5 | 20525 | 836.5 | QPSK | 1 | 12 | 2525 | 881.5 | 2x2 | LTE B2 | 20 | 900 | 1960 | 4x4 | LTE B2 | 20 | 700 | 1940 | 4x4 | LTE B66 | 20 | 66786 | 2145 | 4x4 | LTE B66 | 20 | 66984 | 2166.8 | 4x4 | - | - | - | - | - | - | - | - | - | - | - | - | 25.04 | 25.11 |
| CA_(2A)-5A-(66D) | LTE B5 | 5 | 20525 | 836.5 | QPSK | 1 | 12 | 2525 | 881.5 | 2x2 | LTE B2 | 20 | 900 | 1960 | 2x2 | LTE B2 | 20 | 700 | 1940 | 2x2 | LTE B66 | 20 | 66786 | 2145 | 2x2 | LTE B66 | 20 | 67236 | 2190 | 2x2 | - | - | - | - | - | - | - | - | - | - | - | - | 25.03 | 25.11 |
| CA_(2A)-2A-5A-(66D) | LTE B5 | 5 | 20525 | 836.5 | QPSK | 1 | 12 | 2525 | 881.5 | 2x2 | LTE B2 | 20 | 900 | 1960 | 2x2 | LTE B2 | 20 | 700 | 1940 | 2x2 | LTE B66 | 20 | 66786 | 2145 | 4x4 | LTE B66 | 20 | 67236 | 2190 | 2x2 | - | - | - | - | - | - | - | - | - | - | - | - | 25.05 | 25.11 |
| CA_(2A)-(2A)-5A-(66D) | LTE B5 | 5 | 20525 | 836.5 | QPSK | 1 | 12 | 2525 | 881.5 | 2x2 | LTE B2 | 20 | 900 | 1960 | 4x4 | LTE B2 | 20 | 700 | 1940 | 2x2 | LTE B66 | 20 | 66786 | 2145 | 2x2 | LTE B66 | 20 | 67236 | 2190 | 4x4 | - | - | - | - | - | - | - | - | - | - | - | - | 25.04 | 25.11 |
| CA_(2A)-(2A)-5A-(66D) | LTE B5 | 5 | 20525 | 836.5 | QPSK | 1 | 12 | 2525 | 881.5 | 2x2 | LTE B2 | 20 | 900 | 1960 | 4x4 | LTE B2 | 20 | 700 | 1940 | 2x2 | LTE B66 | 20 | 66786 | 2145 | 4x4 | LTE B66 | 20 | 67236 | 2190 | 4x4 | - | - | - | - | - | - | - | - | - | - | - | - | 25.05 | 25.11 |
| CA_(2A)-5A-30A-(66A)-66A | LTE B5 | 5 | 20525 | 836.5 | QPSK | 1 | 12 | 2525 | 881.5 | 2x2 | LTE B2 | 20 | 900 | 1960 | 2x2 | LTE B30 | 10 | 9820 | 2355 | 2x2 | LTE B66 | 20 | 66786 | 2145 | 2x2 | LTE B66 | 20 | 67236 | 2190 | 2x2 | - | - | - | - | - | - | - | - | - | - | - | - | 25.05 | 25.11 |
| CA_(2A)-5A-30A-(66A)-66A | LTE B5 | 5 | 20525 | 836.5 | QPSK | 1 | 12 | 2525 | 881.5 | 2x2 | LTE B2 | 20 | 900 | 1960 | 2x2 | LTE B30 | 10 | 9820 | 2355 | 4x4 | LTE B66 | 20 | 66786 | 2145 | 2x2 | LTE B66 | 20 | 67236 | 2190 | 2x2 | - | - | - | - | - | - | - | - | - | - | - | - | 25.08 | 25.11 |
| CA_(2A)-(2A)-5A-(30A)-(66A)-66A | LTE B5 | 5 | 20525 | 836.5 | QPSK | 1 | 12 | 2525 | 881.5 | 2x2 | LTE B2 | 20 | 900 | 1960 | 4x4 | LTE B30 | 10 | 9820 | 2355 | 4x4 | LTE B66 | 20 | 66786 | 2145 | 4x4 | LTE B66 | 20 | 67236 | 2190 | 4x4 | - | - | - | - | - | - | - | - | - | - | - | - | 25.09 | 25.11 |
| CA_(2A)-5A-(30A)-(66A)-66A | LTE B5 | 5 | 20525 | 836.5 | QPSK | 1 | 12 | 2525 | 881.5 | 2x2 | LTE B2 | 20 | 900 | 1960 | 2x2 | LTE B30 | 10 | 9820 | 2355 | 2x2 | LTE B66 | 20 | 66786 | 2145 | 2x2 | LTE B66 | 20 | 67236 | 2190 | 2x2 | - | - | - | - | - | - | - | - | - | - | - | - | 25.06 | 25.11 |
| CA_(2A)-(2A)-5A-(30A)-(66A)-66A | LTE B5 | 5 | 20525 | 836.5 | QPSK | 1 | 12 | 2525 | 881.5 | 2x2 | LTE B2 | 20 | 900 | 1960 | 4x4 | LTE B30 | 10 | 9820 | 2355 | 4x4 | LTE B66 | 20 | 66786 | 2145 | 4x4 | LTE B66 | 20 | 67236 | 2190 | 4x4 | - | - | - | - | - | - | - | - | - | - | - | - | 25.07 | 25.11 |
| CA_(2A)-5A-(30A)-(66A)-66A | LTE B5 | 5 | 20525 | 836.5 | QPSK | 1 | 12 | 2525 | 881.5 | 2x2 | LTE B2 | 20 | 900 | 1960 | 2x2 | LTE B30 | 10 | 9820 | 2355 | 4x4 | LTE B66 | 20 | 66786 | 2145 | 4x4 | LTE B66 | 20 | 67236 | 2190 | 4x4 | - | - | - | - | - | - | - | - | - | - | - | - | 25.10 | 25.11 |
| CA_(2A)-(2A)-5A-(30A)-(66A)-66A | LTE B5 | 5 | 20525 | 836.5 | QPSK | 1 | 12 | 2525 | 881.5 | 2x2 | LTE B2 | 20 | 900 | 1960 | 4x4 | LTE B30 | 10 | 9820 | 2355 | 4x4 | LTE B66 | 20 | 66786 | 2145 | 4x4 | LTE B66 | 20 | 67236 | 2190 | 4x4 | - | - | - | - | - | - | - | - | - | - | - | - | 25.06 | 25.11 |
| CA_(2A)-5B-(30A)-66A | LTE B5 | 5 | 20525 | 836.5 | QPSK | 1 | 12 | 2525 | 881.5 | 2x2 | LTE B5 | 10 | 2453 | 874.3 | 2x2 | LTE B2 | 20 | 900 | 1960 | 2x2 | LTE B30 | 10 | 9820 | 2355 | 2x2 | LTE B66 | 20 | 66786 | 2145 | 2x2 | - | - | - | - | - | - | - | - | - | - | - | - | 25.05 | 25.11 |
| CA_(2A)-(2A)-5B-(30A)-66A | LTE B5 | 5 | 20525 | 836.5 | QPSK | 1 | 12 | 2525 | 881.5 | 2x2 | LTE B5 | 10 | 2453 | 874.3 | 2x2 | LTE B2 | 20 | 900 | 1960 | 2x2 | LTE B30 | 10 | 9820 | 2355 | 4x4 | LTE B66 | 20 | 66786 | 2145 | 4x4 | - | - | - | - | - | - | - | - | - | - | - | - | 25.08 | 25.11 |
| CA_(2A)-5A-(30A)-(66A)-66A | LTE B5 | 5 | 20525 | 836.5 | QPSK | 1 | 12 | 2525 | 881.5 | 2x2 | LTE B5 | 10 | 2453 | 874.3 | 2x2 | LTE B2 | 20 | 900 | 1960 | 4x4 | LTE B30 | 10 | 9820 | 2355 | 2x2 | LTE B66 | 20 | 66786 | 2145 | 2x2 | - | - | - | - | - | - | - | - | - | - | - | - | 25.06 | 25.11 |
| CA_(2A)-(2A)-5A-(30A)-(66A)-66A | LTE B5 | 5 | 20525 | 836.5 | QPSK | 1 | 12 | 2525 | 881.5 | 2x2 | LTE B5 | 10 | 2453 | 874.3 | 2x2 | LTE B2 | 20 | 900 | 1960 | 4x4 | LTE B30 | 10 | 9820 | 2355 | 4x4 | LTE B66 | 20 | 66786 | 2145 | 4x4 | - | - | - | - | - | - | - | - | - | - | - | - | 25.09 | 25.11 |
| CA_(2A)-5A-(46C)-66A | LTE B5 | 5 | 20525 | 836.5 | QPSK | 1 | 12 | 2525 | 881.5 | 2x2 | LTE B2 | 20 | 900 | 1960 | 2x2 | LTE B46 | 20 | 55665 | 5537.5 | 2x2 | LTE B46 | 20 | 50467 | 5517.7 | 2x2 | LTE B66 | 20 | 66786 | 2145 | 2x2 | - | - | - | - | - | - | - | - | - | - | - | - | 25.05 | 25.11 |
| CA_(2A)-(2A)-5A-(46C)-66A | LTE B5 | 5 | 20525 | 836.5 | QPSK | 1 | 12 | 2525 | 881.5 | 2x2 | LTE B2 | 20 | 900 | 1960 | 2x2 | LTE B46 | 20 | 55665 | 5537.5 | 2x2 | LTE B46 | 20 | 50467 | 5517.7 | 2x2 | LTE B66 | 20 | 66786 | 2145 | 4x4 | - | - | - | - | - | - | - | - | - | - | - | - | 25.06 | 25.11 |
| CA_(2A)-5A-(46C)-(66A) | LTE B5 | 5 | 20525 | 836.5 | QPSK | 1 | 12 | 2525 | 881.5 | 2x2 | LTE B2 | 20 | 900 | 1960 | 2x2 | LTE B46 | 20 | 55665 | 5537.5 | 2x2 | LTE B46 | 20 | 50467 | 5517.7 | 2x2 | LTE B66 | 20 | 66786 | 2145 | 4x4 | - | - | - | - | - | - | - | - | - | - | - | - | 25.07 | 25.11 |
| CA_(2A)-(2A)-5A-(46C)-(66A) | LTE B5 | 5 | 20525 | 836.5 | QPSK | 1 | 12 | 2525 | 881.5 | 2x2 | LTE B2 | 20 | 900 | 1960 | 2x2 | LTE B46 | 20 | 55665 | 5537.5 | 2x2 | LTE B46 | 20 | 50467 | 5517.7 | 2x2 | LTE B66 | 20 | 66786 | 2145 | 4x4 | - | - | - | - | - | - | - | - | - | - | - | - | 25.08 | 25.11 |
| CA_(2A)-5A-46D-(66A) | LTE B5 | 5 | 20525 | 836.5 | QPSK | 1 | 12 | 2525 | 881.5 | 2x2 | LTE B2 | 20 | 900 | 1960 | 2x2 | LTE B46 | 20 | 55665 | 5537.5 | 2x2 | LTE B46 | 20 | 50467 | 5517.7 | 2x2 | LTE B66 | 20 | 66786 | 2145 | 4x4 | - | - | - | - | - | - | - | - | - | - | - | - | 25.09 | 25.11 |
| CA_(2A)-5A-46D-(66A) | LTE B5 | 5 | 20525 | 836.5 | QPSK | 1 | 12 | 2525 | 881.5 | 2x2 | LTE B2 | 20 | 900 | 1960 | 2x2 | LTE B46 | 20 | 55665 | 5537.5 | 2x2 | LTE B46 | 20 | 50467 | 5517.7 | 2x2 | LTE B66 | 20 | 66786 | 2145 | 4x4 | - | - | - | - | - | - | - | - | - | - | - | - | 25.08 | 25.11 |
| CA_5A-46E-(66A) | LTE B5 | 5 | 20525 | 836.5 | QPSK | 1 | 12 | 2525 | 881.5 | 2x2 | LTE B46 | 20 | 55665 | 5537.5 | 2x2 | LTE B46 | 20 | 50467 | 5517.7 | 2x2 | LTE B46 | 20 | 50863 | 5557.3 | 2x2 | LTE B66 | 20 | 66786 | 2145 | 2x2 | - | - | - | - | - | - | - | - | - | - | - | - | 25.12 | 25.11 |
| CA_(2A)-5A-46D-(66A)-(66A) | LTE B5 | 5 | 20525 | 836.5 | QPSK | 1 | 12 | 2525 | 881.5 | 2x2 | LTE B2 | 20 | 900 | 1960 | 2x2 | LTE B46 | 20 | 55665 | 5537.5 | 2x2 | LTE B46 | 20 | 50467 | 5517.7 | 2x2 | LTE B46 | 20 | 50863 | 5557.3 | 2x2 | LTE B66 | 20 | 66786 | 2145 | 2x2 | LTE B66 | 20 | 67236 | 2190 | 2x2 | 25.25 | 25.11 |
| CA_(2A)-5A-46D-(66A)-(66A) | LTE B5 | 5 | 20525 | 836.5 | QPSK | 1 | 12 | 2525 | 881.5 | 2x2 | LTE B2 | 20 | 900 | 1960 | 2x2 | LTE B46 | 20 | 55665 | 5537.5 | 2x2 | LTE B46 | 20 | 50467 | 5517.7 | 2x2 | LTE B46 | 20 | 50863 | 5557.3 | 2x2 | LTE B66 | 20 | 66786 | 2145 | 4x4 | LTE B66 | 20 | 67236 | 2190 | 2x2 | 25.18 | 25.11 |
| CA_(2A)-5A-46D-(66A)-(66A) | LTE B5 | 5 | 20525 | 836.5 | QPSK | 1 | 12 | 2525 | 881.5 | 2x2 | LTE B2 | 20 | 900 | 1960 | 2x2 | LTE B46 | 20 | 55665 | 5537.5 | 2x2 | LTE B46 | 20 | 50467 | 5517.7 | 2x2 | LTE B46 | 20 | 50863 | 5557.3 | 2x2 | LTE B66 | 20 | 66786 | 2145 | 4x4 | LTE B66 | 20 | 67236 | 2190 | 4x4 | 25.19 | 25.11 |
| CA_5A-46E-(66A)-(66A) | LTE B5 | 5 | 20525 | 836.5 | QPSK | 1 | 12 | 2525 | 881.5 | 2x2 | LTE B46 | 20 | 55665 | 5537.5 | 2x2 | LTE B46 | 20 | 50467 | 5517.7 | 2x2 | LTE B46 | 20 | 50863 | 5557.3 | 2x2 | LTE B46 | 20 | 53061 | 5577.1 | 2x2 | LTE B66 | 20 | 66786 | 2145 | 4x4 | LTE B66 | 20 | 67236 | 2190 | 4x4 | 25.12 | 25.11 |



© 2020 PCTEST

## 1.4.7 LTE Band 26 as PCC

**Table 18**
**Maximum Output Powers**

| | PCC | | | | | | | | | | SCC 1 | | | | | SCC 2 | | | | | SCC 3 | | | | | Power | |
|---|---|---|---|---|---|---|---|---|---|---|---|---|---|---|---|---|---|---|---|---|---|---|---|---|---|---|---|
| Combination | PCC Band | PCC BW [MHz] | PCC (UL) Ch. | PCC (UL) Freq. [MHz] | Mod. | PCC UL# RB | PCC UL RB Offset | PCC (DL) Ch. | PCC (DL) Freq. [MHz] | DL Ant. Config. | SCC Band | SCC BW [MHz] | SCC (DL) Ch. | SCC (DL) Freq. [MHz] | DL Ant. Config. | SCC Band | SCC BW [MHz] | SCC (DL) Ch. | SCC (DL) Freq. [MHz] | DL Ant. Config. | SCC Band | SCC BW [MHz] | SCC (DL) Ch. | SCC (DL) Freq. [MHz] | DL Ant. Config. | LTE Tx.Power with DL CA Enabled | LTE Single Carrier Tx Power (dBm) |
| CA_[25A]-25A-26A | LTE B26 | 5 | 26865 | 831.5 | QPSK | 1 | 24 | 8865 | 876.5 | 2x2 | LTE B25 | 20 | 8365 | 1962.5 | 4x4 | LTE B25 | 20 | 8590 | 1985 | 2x2 | - | - | - | - | - | 25.15 | 25.11 |
| CA_[25A]-[25A]-26A | LTE B26 | 5 | 26865 | 831.5 | QPSK | 1 | 24 | 8865 | 876.5 | 2x2 | LTE B25 | 20 | 8365 | 1962.5 | 4x4 | LTE B25 | 20 | 8590 | 1985 | 4x4 | - | - | - | - | - | 24.44 | 25.11 |
| CA_[25A]-26A-41A | LTE B26 | 5 | 26865 | 831.5 | QPSK | 1 | 24 | 8865 | 876.5 | 2x2 | LTE B25 | 20 | 8365 | 1962.5 | 4x4 | LTE B41 | 20 | 40620 | 2593 | 2x2 | - | - | - | - | - | 25.15 | 25.11 |
| CA_25A-26A-[41A] | LTE B26 | 5 | 26865 | 831.5 | QPSK | 1 | 24 | 8865 | 876.5 | 2x2 | LTE B25 | 20 | 8365 | 1962.5 | 2x2 | LTE B41 | 20 | 40620 | 2593 | 4x4 | - | - | - | - | - | 24.29 | 25.11 |
| CA_[25A]-26A-[41A] | LTE B26 | 5 | 26865 | 831.5 | QPSK | 1 | 24 | 8865 | 876.5 | 2x2 | LTE B25 | 20 | 8365 | 1962.5 | 4x4 | LTE B41 | 20 | 40620 | 2593 | 4x4 | - | - | - | - | - | 24.60 | 25.11 |
| CA_26A-[41C] | LTE B26 | 5 | 26865 | 831.5 | QPSK | 1 | 24 | 8865 | 876.5 | 2x2 | LTE B41 | 20 | 40620 | 2593 | 4x4 | LTE B41 | 20 | 40422 | 2573.2 | 4x4 | - | - | - | - | - | 24.84 | 25.11 |
| CA_[25A]-26A-41C | LTE B26 | 5 | 26865 | 831.5 | QPSK | 1 | 24 | 8865 | 876.5 | 2x2 | LTE B25 | 20 | 8140 | 1940 | 4x4 | LTE B41 | 20 | 40620 | 2593 | 2x2 | LTE B41 | 20 | 40422 | 2573.2 | 2x2 | 25.08 | 25.11 |
| CA_25A-26A-[41C] | LTE B26 | 5 | 26865 | 831.5 | QPSK | 1 | 24 | 8865 | 876.5 | 2x2 | LTE B25 | 20 | 8140 | 1940 | 2x2 | LTE B41 | 20 | 40620 | 2593 | 4x4 | LTE B41 | 20 | 40422 | 2573.2 | 4x4 | 25.12 | 25.11 |
| CA_[25A]-26A-[41C] | LTE B26 | 5 | 26865 | 831.5 | QPSK | 1 | 24 | 8865 | 876.5 | 2x2 | LTE B25 | 20 | 8140 | 1940 | 4x4 | LTE B41 | 20 | 40620 | 2593 | 4x4 | LTE B41 | 20 | 40422 | 2573.2 | 4x4 | 25.11 | 25.11 |

## 1.4.8 LTE Band 66 as PCC

**Table 19**
**Maximum Output Powers**

| | PCC | | | | | | | | | | SCC 1 | | | | | SCC 2 | | | | | SCC 3 | | | | | Power | |
|---|---|---|---|---|---|---|---|---|---|---|---|---|---|---|---|---|---|---|---|---|---|---|---|---|---|---|---|
| Combination | PCC Band | PCC BW [MHz] | PCC (UL) Ch. | PCC (UL) Freq. [MHz] | Mod. | PCC UL# RB | PCC UL RB Offset | PCC (DL) Ch. | PCC (DL) Freq. [MHz] | DL Ant. Config. | SCC Band | SCC BW [MHz] | SCC (DL) Ch. | SCC (DL) Freq. [MHz] | DL Ant. Config. | SCC Band | SCC BW [MHz] | SCC (DL) Ch. | SCC (DL) Freq. [MHz] | DL Ant. Config. | SCC Band | SCC BW [MHz] | SCC (DL) Ch. | SCC (DL) Freq. [MHz] | DL Ant. Config. | LTE Tx.Power with DL CA Enabled | LTE Single Carrier Tx Power (dBm) |
| CA_12A-[66A] (1) | LTE B66 | 10 | 132022 | 1715 | QPSK | 1 | 25 | 66486 | 2115 | 4x4 | LTE B12 | 10 | 5095 | 737.5 | 2x2 | - | - | - | - | - | - | - | - | - | - | 23.89 | 23.90 |
| CA_12A-[66A] (2) | LTE B66 | 10 | 132022 | 1715 | QPSK | 1 | 25 | 66486 | 2115 | 4x4 | LTE B12 | 10 | 5095 | 737.5 | 2x2 | - | - | - | - | - | - | - | - | - | - | 23.89 | 23.90 |
| CA_5A-46A-[66A] | LTE B66 | 10 | 132022 | 1715 | QPSK | 1 | 25 | 66486 | 2115 | 4x4 | LTE B5 | 10 | 2525 | 881.5 | 2x2 | LTE B46 | 20 | 50665 | 5537.5 | 2x2 | - | - | - | - | - | 23.81 | 23.90 |
| CA_13A-46A-[66A] | LTE B66 | 10 | 132022 | 1715 | QPSK | 1 | 25 | 66486 | 2115 | 4x4 | LTE B13 | 10 | 5230 | 751 | 2x2 | LTE B46 | 20 | 50665 | 5537.5 | 2x2 | - | - | - | - | - | 23.85 | 23.90 |
| CA_46A-[66A]-66A | LTE B66 | 10 | 132022 | 1715 | QPSK | 1 | 25 | 66486 | 2115 | 4x4 | LTE B66 | 20 | 67236 | 2190 | 2x2 | LTE B46 | 20 | 50665 | 5537.5 | 2x2 | - | - | - | - | - | 23.91 | 23.90 |
| CA_46A-66A-[66A] | LTE B66 | 10 | 132022 | 1715 | QPSK | 1 | 25 | 66486 | 2115 | 2x2 | LTE B66 | 20 | 67236 | 2190 | 4x4 | LTE B46 | 20 | 50665 | 5537.5 | 2x2 | - | - | - | - | - | 23.87 | 23.90 |
| CA_46A-[66A]-[66A] | LTE B66 | 10 | 132022 | 1715 | QPSK | 1 | 25 | 66486 | 2115 | 4x4 | LTE B66 | 20 | 67236 | 2190 | 4x4 | LTE B46 | 20 | 50665 | 5537.5 | 2x2 | - | - | - | - | - | 23.79 | 23.90 |
| CA_[66A]-66C | LTE B66 | 10 | 132022 | 1715 | QPSK | 1 | 25 | 66486 | 2115 | 4x4 | LTE B66 | 20 | 67038 | 2170.2 | 2x2 | LTE B66 | 20 | 67236 | 2190 | 2x2 | - | - | - | - | - | 23.85 | 23.90 |
| CA_66C-[66A] | LTE B66 | 10 | 132022 | 1715 | QPSK | 1 | 25 | 66486 | 2115 | 2x2 | LTE B66 | 20 | 66630 | 2129.4 | 2x2 | LTE B66 | 20 | 67236 | 2190 | 4x4 | - | - | - | - | - | 23.91 | 23.90 |
| CA_66A-[66C] | LTE B66 | 10 | 132022 | 1715 | QPSK | 1 | 25 | 66486 | 2115 | 2x2 | LTE B66 | 20 | 67038 | 2170.2 | 4x4 | LTE B66 | 20 | 67236 | 2190 | 4x4 | - | - | - | - | - | 23.97 | 23.90 |
| CA_[66C]-66A | LTE B66 | 10 | 132022 | 1715 | QPSK | 1 | 25 | 66486 | 2115 | 4x4 | LTE B66 | 20 | 66630 | 2129.4 | 4x4 | LTE B66 | 20 | 67236 | 2190 | 2x2 | - | - | - | - | - | 24.01 | 23.90 |
| CA_[66A]-[66C] | LTE B66 | 10 | 132022 | 1715 | QPSK | 1 | 25 | 66486 | 2115 | 4x4 | LTE B66 | 20 | 67038 | 2170.2 | 4x4 | LTE B66 | 20 | 67236 | 2190 | 4x4 | - | - | - | - | - | 24.03 | 23.90 |
| CA_[66C]-[66A] | LTE B66 | 10 | 132022 | 1715 | QPSK | 1 | 25 | 66486 | 2115 | 4x4 | LTE B66 | 20 | 66630 | 2129.4 | 4x4 | LTE B66 | 20 | 67236 | 2190 | 4x4 | - | - | - | - | - | 23.87 | 23.90 |
| CA_[2A]-2A-66A-71A | LTE B66 | 10 | 132022 | 1715 | QPSK | 1 | 25 | 66486 | 2115 | 2x2 | LTE B2 | 20 | 900 | 1960 | 4x4 | LTE B2 | 20 | 700 | 1940 | 2x2 | LTE B71 | 20 | 68761 | 634.5 | 2x2 | 23.91 | 23.90 |
| CA_2A-2A-[66A]-71A | LTE B66 | 10 | 132022 | 1715 | QPSK | 1 | 25 | 66486 | 2115 | 4x4 | LTE B2 | 20 | 900 | 1960 | 2x2 | LTE B2 | 20 | 700 | 1940 | 2x2 | LTE B71 | 20 | 68761 | 634.5 | 2x2 | 23.85 | 23.90 |
| CA_[2A]-[2A]-66A-71A | LTE B66 | 10 | 132022 | 1715 | QPSK | 1 | 25 | 66486 | 2115 | 2x2 | LTE B2 | 20 | 900 | 1960 | 4x4 | LTE B2 | 20 | 700 | 1940 | 4x4 | LTE B71 | 20 | 68761 | 634.5 | 2x2 | 23.86 | 23.90 |
| CA_[2A]-2A-[66A]-71A | LTE B66 | 10 | 132022 | 1715 | QPSK | 1 | 25 | 66486 | 2115 | 4x4 | LTE B2 | 20 | 900 | 1960 | 4x4 | LTE B2 | 20 | 700 | 1940 | 4x4 | LTE B71 | 20 | 68761 | 634.5 | 2x2 | 23.88 | 23.90 |
| CA_[2A]-[2A]-[66A]-71A | LTE B66 | 10 | 132022 | 1715 | QPSK | 1 | 25 | 66486 | 2115 | 4x4 | LTE B2 | 20 | 900 | 1960 | 4x4 | LTE B2 | 20 | 700 | 1940 | 4x4 | LTE B71 | 20 | 68761 | 634.5 | 2x2 | 23.87 | 23.90 |
| CA_[2A]-12A-66C | LTE B66 | 10 | 132022 | 1715 | QPSK | 1 | 25 | 66486 | 2115 | 2x2 | LTE B66 | 20 | 66630 | 2129.4 | 2x2 | LTE B2 | 20 | 900 | 1960 | 4x4 | LTE B12 | 10 | 5095 | 737.5 | 2x2 | 23.87 | 23.90 |
| CA_2A-12A-[66C] | LTE B66 | 10 | 132022 | 1715 | QPSK | 1 | 25 | 66486 | 2115 | 4x4 | LTE B66 | 20 | 66630 | 2129.4 | 4x4 | LTE B2 | 20 | 900 | 1960 | 2x2 | LTE B12 | 10 | 5095 | 737.5 | 2x2 | 23.85 | 23.90 |
| CA_[2A]-12A-[66C] | LTE B66 | 10 | 132022 | 1715 | QPSK | 1 | 25 | 66486 | 2115 | 4x4 | LTE B66 | 20 | 66630 | 2129.4 | 4x4 | LTE B2 | 20 | 900 | 1960 | 4x4 | LTE B12 | 10 | 5095 | 737.5 | 2x2 | 23.64 | 23.90 |
| CA_[2A]-13A-66C | LTE B66 | 10 | 132022 | 1715 | QPSK | 1 | 25 | 66486 | 2115 | 2x2 | LTE B66 | 20 | 66630 | 2129.4 | 2x2 | LTE B2 | 20 | 900 | 1960 | 4x4 | LTE B13 | 10 | 5230 | 751 | 2x2 | 23.85 | 23.90 |
| CA_2A-13A-[66C] | LTE B66 | 10 | 132022 | 1715 | QPSK | 1 | 25 | 66486 | 2115 | 4x4 | LTE B66 | 20 | 66630 | 2129.4 | 4x4 | LTE B2 | 20 | 900 | 1960 | 2x2 | LTE B13 | 10 | 5230 | 751 | 2x2 | 23.82 | 23.90 |
| CA_[2A]-13A-[66C] | LTE B66 | 10 | 132022 | 1715 | QPSK | 1 | 25 | 66486 | 2115 | 4x4 | LTE B66 | 20 | 66630 | 2129.4 | 4x4 | LTE B2 | 20 | 900 | 1960 | 4x4 | LTE B13 | 10 | 5230 | 751 | 2x2 | 23.83 | 23.90 |
| CA_[2A]-29A-30A-66A | LTE B66 | 10 | 132022 | 1715 | QPSK | 1 | 25 | 66486 | 2115 | 2x2 | LTE B2 | 20 | 900 | 1960 | 4x4 | LTE B29 | 10 | 9715 | 722.5 | 2x2 | LTE B30 | 10 | 9820 | 2355 | 2x2 | 23.91 | 23.90 |
| CA_2A-29A-[30A]-66A | LTE B66 | 10 | 132022 | 1715 | QPSK | 1 | 25 | 66486 | 2115 | 2x2 | LTE B2 | 20 | 900 | 1960 | 2x2 | LTE B29 | 10 | 9715 | 722.5 | 2x2 | LTE B30 | 10 | 9820 | 2355 | 4x4 | 23.82 | 23.90 |
| CA_2A-29A-30A-[66A] | LTE B66 | 10 | 132022 | 1715 | QPSK | 1 | 25 | 66486 | 2115 | 4x4 | LTE B2 | 20 | 900 | 1960 | 2x2 | LTE B29 | 10 | 9715 | 722.5 | 2x2 | LTE B30 | 10 | 9820 | 2355 | 2x2 | 23.82 | 23.90 |
| CA_[2A]-29A-[30A]-66A | LTE B66 | 10 | 132022 | 1715 | QPSK | 1 | 25 | 66486 | 2115 | 2x2 | LTE B2 | 20 | 900 | 1960 | 4x4 | LTE B29 | 10 | 9715 | 722.5 | 2x2 | LTE B30 | 10 | 9820 | 2355 | 4x4 | 23.77 | 23.90 |
| CA_[2A]-29A-30A-[66A] | LTE B66 | 10 | 132022 | 1715 | QPSK | 1 | 25 | 66486 | 2115 | 4x4 | LTE B2 | 20 | 900 | 1960 | 4x4 | LTE B29 | 10 | 9715 | 722.5 | 2x2 | LTE B30 | 10 | 9820 | 2355 | 2x2 | 23.83 | 23.90 |
| CA_2A-29A-[30A]-[66A] | LTE B66 | 10 | 132022 | 1715 | QPSK | 1 | 25 | 66486 | 2115 | 4x4 | LTE B2 | 20 | 900 | 1960 | 2x2 | LTE B29 | 10 | 9715 | 722.5 | 2x2 | LTE B30 | 10 | 9820 | 2355 | 4x4 | 23.64 | 23.90 |
| CA_[2A]-29A-[30A]-[66A] | LTE B66 | 10 | 132022 | 1715 | QPSK | 1 | 25 | 66486 | 2115 | 4x4 | LTE B2 | 20 | 900 | 1960 | 4x4 | LTE B29 | 10 | 9715 | 722.5 | 2x2 | LTE B30 | 10 | 9820 | 2355 | 4x4 | 23.84 | 23.90 |
| CA_[2A]-30A-[66A]-[66A] | LTE B66 | 10 | 132022 | 1715 | QPSK | 1 | 25 | 66486 | 2115 | 4x4 | LTE B66 | 20 | 67236 | 2190 | 4x4 | LTE B2 | 20 | 900 | 1960 | 4x4 | LTE B30 | 10 | 9820 | 2355 | 2x2 | 23.86 | 23.90 |
| CA_[2A]-46A-46A-66A | LTE B66 | 10 | 132022 | 1715 | QPSK | 1 | 25 | 66486 | 2115 | 2x2 | LTE B2 | 20 | 900 | 1960 | 4x4 | LTE B46 | 20 | 50665 | 5537.5 | 2x2 | LTE B46 | 20 | 47090 | 5180 | 2x2 | 23.80 | 23.90 |
| CA_2A-46A-46A-[66A] | LTE B66 | 10 | 132022 | 1715 | QPSK | 1 | 25 | 66486 | 2115 | 4x4 | LTE B2 | 20 | 900 | 1960 | 2x2 | LTE B46 | 20 | 50665 | 5537.5 | 2x2 | LTE B46 | 20 | 47090 | 5180 | 2x2 | 23.79 | 23.90 |
| CA_[2A]-46A-46A-[66A] | LTE B66 | 10 | 132022 | 1715 | QPSK | 1 | 25 | 66486 | 2115 | 4x4 | LTE B2 | 20 | 900 | 1960 | 4x4 | LTE B46 | 20 | 50665 | 5537.5 | 2x2 | LTE B46 | 20 | 47090 | 5180 | 2x2 | 23.82 | 23.90 |
| CA_[2A]-46A-48A-66A | LTE B66 | 10 | 132022 | 1715 | QPSK | 1 | 25 | 66486 | 2115 | 2x2 | LTE B2 | 20 | 900 | 1960 | 4x4 | LTE B46 | 20 | 50665 | 5537.5 | 2x2 | LTE B48 | 20 | 55990 | 3625 | 2x2 | 23.80 | 23.90 |
| CA_2A-46A-[48A]-66A | LTE B66 | 10 | 132022 | 1715 | QPSK | 1 | 25 | 66486 | 2115 | 2x2 | LTE B2 | 20 | 900 | 1960 | 2x2 | LTE B46 | 20 | 50665 | 5537.5 | 2x2 | LTE B48 | 20 | 55990 | 3625 | 4x4 | 23.81 | 23.90 |
| CA_2A-46A-48A-[66A] | LTE B66 | 10 | 132022 | 1715 | QPSK | 1 | 25 | 66486 | 2115 | 4x4 | LTE B2 | 20 | 900 | 1960 | 2x2 | LTE B46 | 20 | 50665 | 5537.5 | 2x2 | LTE B48 | 20 | 55990 | 3625 | 2x2 | 23.83 | 23.90 |
| CA_[2A]-46A-[48A]-66A | LTE B66 | 10 | 132022 | 1715 | QPSK | 1 | 25 | 66486 | 2115 | 2x2 | LTE B2 | 20 | 900 | 1960 | 4x4 | LTE B46 | 20 | 50665 | 5537.5 | 2x2 | LTE B48 | 20 | 55990 | 3625 | 4x4 | 23.92 | 23.90 |
| CA_[2A]-46A-48A-[66A] | LTE B66 | 10 | 132022 | 1715 | QPSK | 1 | 25 | 66486 | 2115 | 4x4 | LTE B2 | 20 | 900 | 1960 | 4x4 | LTE B46 | 20 | 50665 | 5537.5 | 2x2 | LTE B48 | 20 | 55990 | 3625 | 2x2 | 23.95 | 23.90 |
| CA_2A-46A-[48A]-[66A] | LTE B66 | 10 | 132022 | 1715 | QPSK | 1 | 25 | 66486 | 2115 | 4x4 | LTE B2 | 20 | 900 | 1960 | 2x2 | LTE B46 | 20 | 50665 | 5537.5 | 2x2 | LTE B48 | 20 | 55990 | 3625 | 4x4 | 23.96 | 23.90 |
| CA_[2A]-46A-[48A]-[66A] | LTE B66 | 10 | 132022 | 1715 | QPSK | 1 | 25 | 66486 | 2115 | 4x4 | LTE B2 | 20 | 900 | 1960 | 4x4 | LTE B46 | 20 | 50665 | 5537.5 | 2x2 | LTE B48 | 20 | 55990 | 3625 | 4x4 | 23.94 | 23.90 |
| CA_[2A]-66A-66A-71A | LTE B66 | 10 | 132022 | 1715 | QPSK | 1 | 25 | 66486 | 2115 | 2x2 | LTE B66 | 20 | 67236 | 2190 | 2x2 | LTE B2 | 20 | 900 | 1960 | 4x4 | LTE B71 | 20 | 68761 | 634.5 | 2x2 | 23.96 | 23.90 |
| CA_2A-66A-[66A]-71A | LTE B66 | 10 | 132022 | 1715 | QPSK | 1 | 25 | 66486 | 2115 | 2x2 | LTE B66 | 20 | 67236 | 2190 | 4x4 | LTE B2 | 20 | 900 | 1960 | 2x2 | LTE B71 | 20 | 68761 | 634.5 | 2x2 | 23.94 | 23.90 |
| CA_2A-[66A]-66A-71A | LTE B66 | 10 | 132022 | 1715 | QPSK | 1 | 25 | 66486 | 2115 | 4x4 | LTE B66 | 20 | 67236 | 2190 | 2x2 | LTE B2 | 20 | 900 | 1960 | 2x2 | LTE B71 | 20 | 68761 | 634.5 | 2x2 | 23.87 | 23.90 |
| CA_[2A]-66A-[66A]-71A | LTE B66 | 10 | 132022 | 1715 | QPSK | 1 | 25 | 66486 | 2115 | 2x2 | LTE B66 | 20 | 67236 | 2190 | 4x4 | LTE B2 | 20 | 900 | 1960 | 4x4 | LTE B71 | 20 | 68761 | 634.5 | 2x2 | 23.92 | 23.90 |
| CA_[2A]-[66A]-66A-71A | LTE B66 | 10 | 132022 | 1715 | QPSK | 1 | 25 | 66486 | 2115 | 4x4 | LTE B66 | 20 | 67236 | 2190 | 2x2 | LTE B2 | 20 | 900 | 1960 | 4x4 | LTE B71 | 20 | 68761 | 634.5 | 2x2 | 23.78 | 23.90 |
| CA_2A-[66A]-66A-71A | LTE B66 | 10 | 132022 | 1715 | QPSK | 1 | 25 | 66486 | 2115 | 4x4 | LTE B66 | 20 | 67236 | 2190 | 4x4 | LTE B2 | 20 | 900 | 1960 | 2x2 | LTE B71 | 20 | 68761 | 634.5 | 2x2 | 23.79 | 23.90 |
| CA_[2A]-[66A]-[66A]-71A | LTE B66 | 10 | 132022 | 1715 | QPSK | 1 | 25 | 66486 | 2115 | 4x4 | LTE B66 | 20 | 67236 | 2190 | 4x4 | LTE B2 | 20 | 900 | 1960 | 4x4 | LTE B71 | 20 | 68761 | 634.5 | 2x2 | 23.80 | 23.90 |
| CA_[2C]-66A-66A | LTE B66 | 10 | 132022 | 1715 | QPSK | 1 | 25 | 66486 | 2115 | 2x2 | LTE B66 | 20 | 67236 | 2190 | 4x4 | LTE B2 | 20 | 900 | 1960 | 2x2 | LTE B2 | 20 | 702 | 1940.2 | 2x2 | 23.81 | 23.90 |
| CA_2C-[66A]-66A | LTE B66 | 10 | 132022 | 1715 | QPSK | 1 | 25 | 66486 | 2115 | 4x4 | LTE B66 | 20 | 67236 | 2190 | 2x2 | LTE B2 | 20 | 900 | 1960 | 2x2 | LTE B2 | 20 | 702 | 1940.2 | 2x2 | 23.80 | 23.90 |
| CA_[2C]-66A-66A | LTE B66 | 10 | 132022 | 1715 | QPSK | 1 | 25 | 66486 | 2115 | 2x2 | LTE B66 | 20 | 67236 | 2190 | 4x4 | LTE B2 | 20 | 900 | 1960 | 4x4 | LTE B2 | 20 | 702 | 1940.2 | 4x4 | 23.78 | 23.90 |
| CA_[2C]-[66A]-66A | LTE B66 | 10 | 132022 | 1715 | QPSK | 1 | 25 | 66486 | 2115 | 4x4 | LTE B66 | 20 | 67236 | 2190 | 2x2 | LTE B2 | 20 | 900 | 1960 | 4x4 | LTE B2 | 20 | 702 | 1940.2 | 4x4 | 23.91 | 23.90 |
| CA_2C-[66A]-[66A] | LTE B66 | 10 | 132022 | 1715 | QPSK | 1 | 25 | 66486 | 2115 | 4x4 | LTE B66 | 20 | 67236 | 2190 | 4x4 | LTE B2 | 20 | 900 | 1960 | 2x2 | LTE B2 | 20 | 702 | 1940.2 | 2x2 | 23.88 | 23.90 |
| CA_[2C]-[66A]-[66A] | LTE B66 | 10 | 132022 | 1715 | QPSK | 1 | 25 | 66486 | 2115 | 4x4 | LTE B66 | 20 | 67236 | 2190 | 4x4 | LTE B2 | 20 | 900 | 1960 | 4x4 | LTE B2 | 20 | 702 | 1940.2 | 4x4 | 23.80 | 23.90 |
| CA_[2A]-66C-71A | LTE B66 | 10 | 132022 | 1715 | QPSK | 1 | 25 | 66486 | 2115 | 2x2 | LTE B66 | 20 | 66630 | 2129.4 | 2x2 | LTE B2 | 20 | 900 | 1960 | 4x4 | LTE B71 | 20 | 68761 | 634.5 | 2x2 | 23.79 | 23.90 |
| CA_2A-[66C]-71A | LTE B66 | 10 | 132022 | 1715 | QPSK | 1 | 25 | 66486 | 2115 | 4x4 | LTE B66 | 20 | 66630 | 2129.4 | 4x4 | LTE B2 | 20 | 900 | 1960 | 2x2 | LTE B71 | 20 | 68761 | 634.5 | 2x2 | 23.68 | 23.90 |
| CA_[2A]-[66C]-71A | LTE B66 | 10 | 132022 | 1715 | QPSK | 1 | 25 | 66486 | 2115 | 4x4 | LTE B66 | 20 | 66630 | 2129.4 | 4x4 | LTE B2 | 20 | 900 | 1960 | 4x4 | LTE B71 | 20 | 68761 | 634.5 | 2x2 | 23.84 | 23.90 |
| CA_5A-5A-[66B] | LTE B66 | 10 | 132022 | 1715 | QPSK | 1 | 25 | 66486 | 2115 | 4x4 | LTE B66 | 10 | 66585 | 2124.9 | 4x4 | LTE B5 | 10 | 2525 | 881.5 | 2x2 | LTE B5 | 5 | 2425 | 871.5 | 2x2 | 23.77 | 23.90 |
| CA_5A-5A-[66C] | LTE B66 | 10 | 132022 | 1715 | QPSK | 1 | 25 | 66486 | 2115 | 4x4 | LTE B66 | 20 | 66630 | 2129.4 | 4x4 | LTE B5 | 10 | 2525 | 881.5 | 2x2 | LTE B5 | 5 | 2425 | 871.5 | 2x2 | 23.84 | 23.90 |
| CA_5A-46C-[66A] | LTE B66 | 10 | 132022 | 1715 | QPSK | 1 | 25 | 66486 | 2115 | 4x4 | LTE B5 | 10 | 2525 | 881.5 | 2x2 | LTE B46 | 20 | 50665 | 5537.5 | 2x2 | LTE B46 | 20 | 50467 | 5517.7 | 2x2 | 23.69 | 23.90 |
| CA_13A-46C-[66A] | LTE B66 | 10 | 132022 | 1715 | QPSK | 1 | 25 | 66486 | 2115 | 4x4 | LTE B13 | 10 | 5230 | 751 | 2x2 | LTE B46 | 20 | 50665 | 5537.5 | 2x2 | LTE B46 | 20 | 50467 | 5517.7 | 2x2 | 23.80 | 23.90 |
| CA_13A-[48A]-66B | LTE B66 | 10 | 132022 | 1715 | QPSK | 1 | 25 | 66486 | 2115 | 2x2 | LTE B66 | 10 | 66585 | 2124.9 | 2x2 | LTE B13 | 10 | 5230 | 751 | 2x2 | LTE B48 | 20 | 55990 | 3625 | 4x4 | 23.85 | 23.90 |
| CA_13A-48A-[66B] | LTE B66 | 10 | 132022 | 1715 | QPSK | 1 | 25 | 66486 | 2115 | 4x4 | LTE B66 | 10 | 66585 | 2124.9 | 4x4 | LTE B13 | 10 | 5230 | 751 | 2x2 | LTE B48 | 20 | 55990 | 3625 | 2x2 | 23.76 | 23.90 |
| CA_13A-[48A]-[66B] | LTE B66 | 10 | 132022 | 1715 | QPSK | 1 | 25 | 66486 | 2115 | 4x4 | LTE B66 | 10 | 66585 | 2124.9 | 4x4 | LTE B13 | 10 | 5230 | 751 | 2x2 | LTE B48 | 20 | 55990 | 3625 | 4x4 | 23.81 | 23.90 |
| CA_13A-[48A]-66C | LTE B66 | 10 | 132022 | 1715 | QPSK | 1 | 25 | 66486 | 2115 | 2x2 | LTE B66 | 20 | 66630 | 2129.4 | 2x2 | LTE B13 | 10 | 5230 | 751 | 2x2 | LTE B48 | 20 | 55990 | 3625 | 4x4 | 23.82 | 23.90 |
| CA_13A-48A-[66C] | LTE B66 | 10 | 132022 | 1715 | QPSK | 1 | 25 | 66486 | 2115 | 4x4 | LTE B66 | 20 | 66630 | 2129.4 | 4x4 | LTE B13 | 10 | 5230 | 751 | 2x2 | LTE B48 | 20 | 55990 | 3625 | 2x2 | 23.69 | 23.90 |
| CA_13A-[48A]-[66C] | LTE B66 | 10 | 132022 | 1715 | QPSK | 1 | 25 | 66486 | 2115 | 4x4 | LTE B66 | 20 | 66630 | 2129.4 | 4x4 | LTE B13 | 10 | 5230 | 751 | 2x2 | LTE B48 | 20 | 55990 | 3625 | 4x4 | 23.82 | 23.90 |
| CA_29A-[30A]-66A-66A | LTE B66 | 10 | 132022 | 1715 | QPSK | 1 | 25 | 66486 | 2115 | 2x2 | LTE B66 | 20 | 67236 | 2190 | 2x2 | LTE B29 | 10 | 9715 | 722.5 | 2x2 | LTE B30 | 10 | 9820 | 2355 | 4x4 | 23.82 | 23.90 |
| CA_29A-30A-[66A]-66A | LTE B66 | 10 | 132022 | 1715 | QPSK | 1 | 25 | 66486 | 2115 | 4x4 | LTE B66 | 20 | 67236 | 2190 | 2x2 | LTE B29 | 10 | 9715 | 722.5 | 2x2 | LTE B30 | 10 | 9820 | 2355 | 4x4 | 23.77 | 23.90 |
| CA_29A-30A-66A-[66A] | LTE B66 | 10 | 132022 | 1715 | QPSK | 1 | 25 | 66486 | 2115 | 4x4 | LTE B66 | 20 | 67236 | 2190 | 4x4 | LTE B29 | 10 | 9715 | 722.5 | 2x2 | LTE B30 | 10 | 9820 | 2355 | 2x2 | 23.80 | 23.90 |
| CA_29A-[30A]-66A-[66A] | LTE B66 | 10 | 132022 | 1715 | QPSK | 1 | 25 | 66486 | 2115 | 4x4 | LTE B66 | 20 | 67236 | 2190 | 2x2 | LTE B29 | 10 | 9715 | 722.5 | 2x2 | LTE B30 | 10 | 9820 | 2355 | 4x4 | 23.81 | 23.90 |
| CA_29A-[30A]-66A-[66A] | LTE B66 | 10 | 132022 | 1715 | QPSK | 1 | 25 | 66486 | 2115 | 2x2 | LTE B66 | 20 | 67236 | 2190 | 4x4 | LTE B29 | 10 | 9715 | 722.5 | 2x2 | LTE B30 | 10 | 9820 | 2355 | 4x4 | 23.91 | 23.90 |
| CA_29A-[30A]-[66A]-66A | LTE B66 | 10 | 132022 | 1715 | QPSK | 1 | 25 | 66486 | 2115 | 4x4 | LTE B66 | 20 | 67236 | 2190 | 4x4 | LTE B29 | 10 | 9715 | 722.5 | 2x2 | LTE B30 | 10 | 9820 | 2355 | 2x2 | 23.89 | 23.90 |
| CA_29A-[30A]-[66A]-[66A] | LTE B66 | 10 | 132022 | 1715 | QPSK | 1 | 25 | 66486 | 2115 | 4x4 | LTE B66 | 20 | 67236 | 2190 | 4x4 | LTE B29 | 10 | 9715 | 722.5 | 2x2 | LTE B30 | 10 | 9820 | 2355 | 4x4 | 23.87 | 23.90 |
| CA_46C-66A-[66A] | LTE B66 | 10 | 132022 | 1715 | QPSK | 1 | 25 | 66486 | 2115 | 2x2 | LTE B66 | 20 | 67236 | 2190 | 4x4 | LTE B46 | 20 | 50665 | 5537.5 | 2x2 | LTE B46 | 20 | 50467 | 5517.7 | 2x2 | 23.89 | 23.90 |
| CA_46C-[66A]-66A | LTE B66 | 10 | 132022 | 1715 | QPSK | 1 | 25 | 66486 | 2115 | 4x4 | LTE B66 | 20 | 67236 | 2190 | 2x2 | LTE B46 | 20 | 50665 | 5537.5 | 2x2 | LTE B46 | 20 | 50467 | 5517.7 | 2x2 | 23.88 | 23.90 |
| CA_46C-[66A]-[66A] | LTE B66 | 10 | 132022 | 1715 | QPSK | 1 | 25 | 66486 | 2115 | 4x4 | LTE B66 | 20 | 67236 | 2190 | 4x4 | LTE B46 | 20 | 50665 | 5537.5 | 2x2 | LTE B46 | 20 | 50467 | 5517.7 | 2x2 | 23.88 | 23.90 |
| CA_[48A]-48A-66A-66A | LTE B66 | 10 | 132022 | 1715 | QPSK | 1 | 25 | 66486 | 2115 | 2x2 | LTE B66 | 20 | 67236 | 2190 | 2x2 | LTE B48 | 20 | 55990 | 3625 | 4x4 | LTE B48 | 20 | 55340 | 3560 | 2x2 | 23.88 | 23.90 |
| CA_48A-48A-66A-[66A] | LTE B66 | 10 | 132022 | 1715 | QPSK | 1 | 25 | 66486 | 2115 | 2x2 | LTE B66 | 20 | 67236 | 2190 | 4x4 | LTE B48 | 20 | 55990 | 3625 | 2x2 | LTE B48 | 20 | 55340 | 3560 | 2x2 | 23.88 | 23.90 |
| CA_48A-48A-[66A]-66A | LTE B66 | 10 | 132022 | 1715 | QPSK | 1 | 25 | 66486 | 2115 | 4x4 | LTE B66 | 20 | 67236 | 2190 | 2x2 | LTE B48 | 20 | 55990 | 3625 | 4x4 | LTE B48 | 20 | 55340 | 3560 | 2x2 | 23.75 | 23.90 |
| CA_[48A]-48A-[66A]-66A | LTE B66 | 10 | 132022 | 1715 | QPSK | 1 | 25 | 66486 | 2115 | 2x2 | LTE B66 | 20 | 67236 | 2190 | 2x2 | LTE B48 | 20 | 55990 | 3625 | 4x4 | LTE B48 | 20 | 55340 | 3560 | 4x4 | 23.76 | 23.90 |
| CA_[48A]-48A-66A-[66A] | LTE B66 | 10 | 132022 | 1715 | QPSK | 1 | 25 | 66486 | 2115 | 2x2 | LTE B66 | 20 | 67236 | 2190 | 4x4 | LTE B48 | 20 | 55990 | 3625 | 4x4 | LTE B48 | 20 | 55340 | 3560 | 2x2 | 23.77 | 23.90 |
| CA_[48A]-48A-[66A]-66A | LTE B66 | 10 | 132022 | 1715 | QPSK | 1 | 25 | 66486 | 2115 | 4x4 | LTE B66 | 20 | 67236 | 2190 | 2x2 | LTE B48 | 20 | 55990 | 3625 | 4x4 | LTE B48 | 20 | 55340 | 3560 | 2x2 | 23.78 | 23.90 |
| CA_48A-48A-[66A]-[66A] | LTE B66 | 10 | 132022 | 1715 | QPSK | 1 | 25 | 66486 | 2115 | 4x4 | LTE B66 | 20 | 67236 | 2190 | 2x2 | LTE B48 | 20 | 55990 | 3625 | 2x2 | LTE B48 | 20 | 55340 | 3560 | 4x4 | 23.75 | 23.90 |
| CA_[48A]-48A-[66A]-[66A] | LTE B66 | 10 | 132022 | 1715 | QPSK | 1 | 25 | 66486 | 2115 | 2x2 | LTE B66 | 20 | 67236 | 2190 | 2x2 | LTE B48 | 20 | 55990 | 3625 | 4x4 | LTE B48

| | PCC | | | | | | | | | | SCC 1 | | | | | | SCC 2 | | | | | | SCC 3 | | | | | | SCC 4 | | | | | Power | |
|---|---|---|---|---|---|---|---|---|---|---|---|---|---|---|---|---|---|---|---|---|---|---|---|---|---|---|---|---|---|---|---|---|---|---|---|
| Combination | PCC Band | PCC BW [MHz] | PCC (UL) Ch. | PCC (UL) Freq. [MHz] | Mod. | PCC UL# RB | PCC UL RB Offset | PCC (DL) Ch. | PCC (DL) Freq. [MHz] | DL Ant. Config. | SCC Band | SCC BW [MHz] | SCC (DL) Ch. | SCC (DL) Freq. [MHz] | DL Ant. Config. | SCC Band | SCC BW [MHz] | SCC (DL) Ch. | SCC (DL) Freq. [MHz] | DL Ant. Config. | SCC Band | SCC BW [MHz] | SCC (DL) Ch. | SCC (DL) Freq. [MHz] | DL Ant. Config. | SCC Band | SCC BW [MHz] | SCC (DL) Ch. | SCC (DL) Freq. [MHz] | DL Ant. Config. | LTE Tx.Power with DL CA Enabled | LTE Single Carrier Tx Power (dBm) |
| CA_{2A}-2A-5A-30A-66A | LTE B66 | 10 | 132022 | 1715 | QPSK | 1 | 25 | 66486 | 2115 | 2x2 | LTE B2 | 20 | 900 | 1960 | 4x4 | LTE B2 | 20 | 700 | 1940 | 2x2 | LTE B5 | 10 | 2525 | 881.5 | 2x2 | LTE B30 | 10 | 9820 | 2355 | 2x2 | 23.91 | 23.90 |
| CA_{2A-2A-5A-30A}-66A | LTE B66 | 10 | 132022 | 1715 | QPSK | 1 | 25 | 66486 | 2115 | 2x2 | LTE B2 | 20 | 900 | 1960 | 2x2 | LTE B2 | 20 | 700 | 1940 | 2x2 | LTE B5 | 10 | 2525 | 881.5 | 2x2 | LTE B30 | 10 | 9820 | 2355 | 4x4 | 23.84 | 23.90 |
| CA_{2A-2A-5A-30A-(66A)} | LTE B66 | 10 | 132022 | 1715 | QPSK | 1 | 25 | 66486 | 2115 | 4x4 | LTE B2 | 20 | 900 | 1960 | 2x2 | LTE B2 | 20 | 700 | 1940 | 2x2 | LTE B5 | 10 | 2525 | 881.5 | 2x2 | LTE B30 | 10 | 9820 | 2355 | 2x2 | 23.80 | 23.90 |
| CA_{2A}-{2A}-{2A}-5A-30A-66A | LTE B66 | 10 | 132022 | 1715 | QPSK | 1 | 25 | 66486 | 2115 | 2x2 | LTE B2 | 20 | 900 | 1960 | 4x4 | LTE B2 | 20 | 700 | 1940 | 4x4 | LTE B5 | 10 | 2525 | 881.5 | 2x2 | LTE B30 | 10 | 9820 | 2355 | 2x2 | 23.95 | 23.90 |
| CA_{2A}-2A-5A-(30A)-66A | LTE B66 | 10 | 132022 | 1715 | QPSK | 1 | 25 | 66486 | 2115 | 2x2 | LTE B2 | 20 | 900 | 1960 | 4x4 | LTE B2 | 20 | 700 | 1940 | 2x2 | LTE B5 | 10 | 2525 | 881.5 | 2x2 | LTE B30 | 10 | 9820 | 2355 | 4x4 | 23.96 | 23.90 |
| CA_{2A}-2A-5A-30A-{66A} | LTE B66 | 10 | 132022 | 1715 | QPSK | 1 | 25 | 66486 | 2115 | 4x4 | LTE B2 | 20 | 900 | 1960 | 4x4 | LTE B2 | 20 | 700 | 1940 | 2x2 | LTE B5 | 10 | 2525 | 881.5 | 2x2 | LTE B30 | 10 | 9820 | 2355 | 2x2 | 23.93 | 23.90 |
| CA_{2A-2A-5A-(30A)}-66A | LTE B66 | 10 | 132022 | 1715 | QPSK | 1 | 25 | 66486 | 2115 | 4x4 | LTE B2 | 20 | 900 | 1960 | 2x2 | LTE B2 | 20 | 700 | 1940 | 2x2 | LTE B5 | 10 | 2525 | 881.5 | 2x2 | LTE B30 | 10 | 9820 | 2355 | 4x4 | 23.84 | 23.90 |
| CA_{2A}-{2A}-{2A}-5A-(30A)-66A | LTE B66 | 10 | 132022 | 1715 | QPSK | 1 | 25 | 66486 | 2115 | 4x4 | LTE B2 | 20 | 900 | 1960 | 4x4 | LTE B2 | 20 | 700 | 1940 | 4x4 | LTE B5 | 10 | 2525 | 881.5 | 2x2 | LTE B30 | 10 | 9820 | 2355 | 4x4 | 23.91 | 23.90 |
| CA_{2A}-2A-5A-30A-{66A} | LTE B66 | 10 | 132022 | 1715 | QPSK | 1 | 25 | 66486 | 2115 | 4x4 | LTE B2 | 20 | 900 | 1960 | 4x4 | LTE B2 | 20 | 700 | 1940 | 2x2 | LTE B5 | 10 | 2525 | 881.5 | 2x2 | LTE B30 | 10 | 9820 | 2355 | 4x4 | 23.83 | 23.90 |
| CA_{2A-2A-5A-(30A)}-66A | LTE B66 | 10 | 132022 | 1715 | QPSK | 1 | 25 | 66486 | 2115 | 4x4 | LTE B2 | 20 | 900 | 1960 | 4x4 | LTE B2 | 20 | 700 | 1940 | 2x2 | LTE B5 | 10 | 2525 | 881.5 | 2x2 | LTE B30 | 10 | 9820 | 2355 | 4x4 | 23.89 | 23.90 |
| CA_{2A}-{2A}-5A-(30A)-66A | LTE B66 | 10 | 132022 | 1715 | QPSK | 1 | 25 | 66486 | 2115 | 4x4 | LTE B2 | 20 | 900 | 1960 | 4x4 | LTE B2 | 20 | 700 | 1940 | 4x4 | LTE B5 | 10 | 2525 | 881.5 | 2x2 | LTE B30 | 10 | 9820 | 2355 | 4x4 | 23.87 | 23.90 |
| CA_{2A}-2A-5A-(30A)-{66A} | LTE B66 | 10 | 132022 | 1715 | QPSK | 1 | 25 | 66486 | 2115 | 4x4 | LTE B2 | 20 | 900 | 1960 | 4x4 | LTE B2 | 20 | 700 | 1940 | 4x4 | LTE B5 | 10 | 2525 | 881.5 | 2x2 | LTE B30 | 10 | 9820 | 2355 | 4x4 | 23.84 | 23.90 |
| CA_{2A}-2A-5A-66A-66A | LTE B66 | 10 | 132022 | 1715 | QPSK | 1 | 25 | 66486 | 2115 | 2x2 | LTE B66 | 20 | 67236 | 2190 | 4x4 | LTE B2 | 20 | 900 | 1960 | 2x2 | LTE B2 | 20 | 700 | 1940 | 2x2 | LTE B5 | 10 | 2525 | 881.5 | 2x2 | 23.87 | 23.90 |
| CA_{2A-2A-5A-66A}-66A | LTE B66 | 10 | 132022 | 1715 | QPSK | 1 | 25 | 66486 | 2115 | 2x2 | LTE B66 | 20 | 67236 | 2190 | 4x4 | LTE B2 | 20 | 900 | 1960 | 2x2 | LTE B2 | 20 | 700 | 1940 | 2x2 | LTE B5 | 10 | 2525 | 881.5 | 2x2 | 23.82 | 23.90 |
| CA_{2A}-{2A}-5A-66A-66A | LTE B66 | 10 | 132022 | 1715 | QPSK | 1 | 25 | 66486 | 2115 | 2x2 | LTE B66 | 20 | 67236 | 2190 | 2x2 | LTE B2 | 20 | 900 | 1960 | 4x4 | LTE B2 | 20 | 700 | 1940 | 4x4 | LTE B5 | 10 | 2525 | 881.5 | 2x2 | 23.88 | 23.90 |
| CA_{2A-2A-5A-66A}-{66A} | LTE B66 | 10 | 132022 | 1715 | QPSK | 1 | 25 | 66486 | 2115 | 2x2 | LTE B66 | 20 | 67236 | 2190 | 4x4 | LTE B2 | 20 | 900 | 1960 | 4x4 | LTE B2 | 20 | 700 | 1940 | 2x2 | LTE B5 | 10 | 2525 | 881.5 | 2x2 | 23.89 | 23.90 |
| CA_{2A}-{2A}-5A-{66A}-66A | LTE B66 | 10 | 132022 | 1715 | QPSK | 1 | 25 | 66486 | 2115 | 4x4 | LTE B66 | 20 | 67236 | 2190 | 2x2 | LTE B2 | 20 | 900 | 1960 | 4x4 | LTE B2 | 20 | 700 | 1940 | 4x4 | LTE B5 | 10 | 2525 | 881.5 | 2x2 | 23.89 | 23.90 |
| CA_{2A-2A-5A-{66A}}-{66A} | LTE B66 | 10 | 132022 | 1715 | QPSK | 1 | 25 | 66486 | 2115 | 4x4 | LTE B66 | 20 | 67236 | 2190 | 4x4 | LTE B2 | 20 | 900 | 1960 | 2x2 | LTE B2 | 20 | 700 | 1940 | 2x2 | LTE B5 | 10 | 2525 | 881.5 | 2x2 | 23.84 | 23.90 |
| CA_{2A}-{2A}-5A-(66A)-66A | LTE B66 | 10 | 132022 | 1715 | QPSK | 1 | 25 | 66486 | 2115 | 4x4 | LTE B66 | 20 | 67236 | 2190 | 2x2 | LTE B2 | 20 | 900 | 1960 | 4x4 | LTE B2 | 20 | 700 | 1940 | 4x4 | LTE B5 | 10 | 2525 | 881.5 | 2x2 | 23.92 | 23.90 |
| CA_{2A}-{2A}-5A-(66A)-{66A} | LTE B66 | 10 | 132022 | 1715 | QPSK | 1 | 25 | 66486 | 2115 | 2x2 | LTE B66 | 20 | 67236 | 2190 | 4x4 | LTE B2 | 20 | 900 | 1960 | 4x4 | LTE B2 | 20 | 700 | 1940 | 4x4 | LTE B5 | 10 | 2525 | 881.5 | 2x2 | 23.81 | 23.90 |
| CA_{2A}-2A-5A-(66A)-{66A} | LTE B66 | 10 | 132022 | 1715 | QPSK | 1 | 25 | 66486 | 2115 | 4x4 | LTE B66 | 20 | 67236 | 2190 | 4x4 | LTE B2 | 20 | 900 | 1960 | 4x4 | LTE B2 | 20 | 700 | 1940 | 2x2 | LTE B5 | 10 | 2525 | 881.5 | 2x2 | 23.85 | 23.90 |
| CA_{2A}-{2A}-5A-(66A)-{66A} | LTE B66 | 10 | 132022 | 1715 | QPSK | 1 | 25 | 66486 | 2115 | 4x4 | LTE B66 | 20 | 67236 | 2190 | 4x4 | LTE B2 | 20 | 900 | 1960 | 4x4 | LTE B2 | 20 | 700 | 1940 | 4x4 | LTE B5 | 10 | 2525 | 881.5 | 2x2 | 23.94 | 23.90 |
| CA_{2A}-2A-5A-66B | LTE B66 | 10 | 132022 | 1715 | QPSK | 1 | 25 | 66486 | 2115 | 2x2 | LTE B66 | 10 | 66585 | 2124.9 | 2x2 | LTE B2 | 20 | 900 | 1960 | 4x4 | LTE B2 | 20 | 700 | 1940 | 2x2 | LTE B5 | 10 | 2525 | 881.5 | 2x2 | 23.83 | 23.90 |
| CA_{2A-2A-5A-{66B}} | LTE B66 | 10 | 132022 | 1715 | QPSK | 1 | 25 | 66486 | 2115 | 4x4 | LTE B66 | 10 | 66585 | 2124.9 | 4x4 | LTE B2 | 20 | 900 | 1960 | 2x2 | LTE B2 | 20 | 700 | 1940 | 4x4 | LTE B5 | 10 | 2525 | 881.5 | 2x2 | 23.84 | 23.90 |
| CA_{2A}-{2A}-5A-66B | LTE B66 | 10 | 132022 | 1715 | QPSK | 1 | 25 | 66486 | 2115 | 2x2 | LTE B66 | 10 | 66585 | 2124.9 | 2x2 | LTE B2 | 20 | 900 | 1960 | 4x4 | LTE B2 | 20 | 700 | 1940 | 4x4 | LTE B5 | 10 | 2525 | 881.5 | 2x2 | 23.92 | 23.90 |
| CA_{2A}-{2A}-5A-{66B} | LTE B66 | 10 | 132022 | 1715 | QPSK | 1 | 25 | 66486 | 2115 | 4x4 | LTE B66 | 10 | 66585 | 2124.9 | 4x4 | LTE B2 | 20 | 900 | 1960 | 4x4 | LTE B2 | 20 | 700 | 1940 | 4x4 | LTE B5 | 10 | 2525 | 881.5 | 2x2 | 23.89 | 23.90 |
| CA_{2A-2A-5A-66C} | LTE B66 | 10 | 132022 | 1715 | QPSK | 1 | 25 | 66486 | 2115 | 2x2 | LTE B66 | 20 | 66630 | 2129.4 | 2x2 | LTE B2 | 20 | 900 | 1960 | 4x4 | LTE B2 | 20 | 700 | 1940 | 2x2 | LTE B5 | 10 | 2525 | 881.5 | 2x2 | 23.83 | 23.90 |
| CA_{2A-2A-5A-(66C)} | LTE B66 | 10 | 132022 | 1715 | QPSK | 1 | 25 | 66486 | 2115 | 4x4 | LTE B66 | 20 | 66630 | 2129.4 | 4x4 | LTE B2 | 20 | 900 | 1960 | 2x2 | LTE B2 | 20 | 700 | 1940 | 2x2 | LTE B5 | 10 | 2525 | 881.5 | 2x2 | 23.85 | 23.90 |
| CA_{2A}-{2A}-5A-66C | LTE B66 | 10 | 132022 | 1715 | QPSK | 1 | 25 | 66486 | 2115 | 2x2 | LTE B66 | 20 | 66630 | 2129.4 | 2x2 | LTE B2 | 20 | 900 | 1960 | 4x4 | LTE B2 | 20 | 700 | 1940 | 4x4 | LTE B5 | 10 | 2525 | 881.5 | 2x2 | 23.88 | 23.90 |
| CA_{2A}-2A-5A-{66C} | LTE B66 | 10 | 132022 | 1715 | QPSK | 1 | 25 | 66486 | 2115 | 4x4 | LTE B66 | 20 | 66630 | 2129.4 | 4x4 | LTE B2 | 20 | 900 | 1960 | 4x4 | LTE B2 | 20 | 700 | 1940 | 2x2 | LTE B5 | 10 | 2525 | 881.5 | 2x2 | 23.93 | 23.90 |
| CA_{2A}-{2A}-5A-{66C} | LTE B66 | 10 | 132022 | 1715 | QPSK | 1 | 25 | 66486 | 2115 | 4x4 | LTE B66 | 20 | 66630 | 2129.4 | 4x4 | LTE B2 | 20 | 900 | 1960 | 4x4 | LTE B2 | 20 | 700 | 1940 | 4x4 | LTE B5 | 10 | 2525 | 881.5 | 2x2 | 23.89 | 23.90 |
| CA_{2A}-2A-12A-30A-66A | LTE B66 | 10 | 132022 | 1715 | QPSK | 1 | 25 | 66486 | 2115 | 2x2 | LTE B2 | 20 | 900 | 1960 | 4x4 | LTE B2 | 20 | 700 | 1940 | 2x2 | LTE B12 | 10 | 5095 | 737.5 | 2x2 | LTE B30 | 10 | 9820 | 2355 | 2x2 | 23.80 | 23.90 |
| CA_{2A-2A-12A-(30A)-66A} | LTE B66 | 10 | 132022 | 1715 | QPSK | 1 | 25 | 66486 | 2115 | 2x2 | LTE B2 | 20 | 900 | 1960 | 2x2 | LTE B2 | 20 | 700 | 1940 | 2x2 | LTE B12 | 10 | 5095 | 737.5 | 2x2 | LTE B30 | 10 | 9820 | 2355 | 4x4 | 23.85 | 23.90 |
| CA_{2A-2A-12A-30A}-66A | LTE B66 | 10 | 132022 | 1715 | QPSK | 1 | 25 | 66486 | 2115 | 4x4 | LTE B2 | 20 | 900 | 1960 | 2x2 | LTE B2 | 20 | 700 | 1940 | 2x2 | LTE B12 | 10 | 5095 | 737.5 | 2x2 | LTE B30 | 10 | 9820 | 2355 | 2x2 | 23.84 | 23.90 |
| CA_{2A}-2A-12A-(30A)-66A | LTE B66 | 10 | 132022 | 1715 | QPSK | 1 | 25 | 66486 | 2115 | 4x4 | LTE B2 | 20 | 900 | 1960 | 4x4 | LTE B2 | 20 | 700 | 1940 | 2x2 | LTE B12 | 10 | 5095 | 737.5 | 2x2 | LTE B30 | 10 | 9820 | 2355 | 2x2 | 23.98 | 23.90 |
| CA_{2A}-2A-12A-30A-{66A} | LTE B66 | 10 | 132022 | 1715 | QPSK | 1 | 25 | 66486 | 2115 | 4x4 | LTE B2 | 20 | 900 | 1960 | 4x4 | LTE B2 | 20 | 700 | 1940 | 2x2 | LTE B12 | 10 | 5095 | 737.5 | 2x2 | LTE B30 | 10 | 9820 | 2355 | 2x2 | 23.90 | 23.90 |
| CA_{2A-2A-12A-(30A)}-66A | LTE B66 | 10 | 132022 | 1715 | QPSK | 1 | 25 | 66486 | 2115 | 4x4 | LTE B2 | 20 | 900 | 1960 | 2x2 | LTE B2 | 20 | 700 | 1940 | 2x2 | LTE B12 | 10 | 5095 | 737.5 | 2x2 | LTE B30 | 10 | 9820 | 2355 | 4x4 | 23.85 | 23.90 |
| CA_{2A}-{2A}-{2A}-12A-(30A)-66A | LTE B66 | 10 | 132022 | 1715 | QPSK | 1 | 25 | 66486 | 2115 | 2x2 | LTE B2 | 20 | 900 | 1960 | 4x4 | LTE B2 | 20 | 700 | 1940 | 4x4 | LTE B12 | 10 | 5095 | 737.5 | 2x2 | LTE B30 | 10 | 9820 | 2355 | 4x4 | 23.91 | 23.90 |
| CA_{2A}-{2A}-12A-30A-66A | LTE B66 | 10 | 132022 | 1715 | QPSK | 1 | 25 | 66486 | 2115 | 4x4 | LTE B2 | 20 | 900 | 1960 | 4x4 | LTE B2 | 20 | 700 | 1940 | 4x4 | LTE B12 | 10 | 5095 | 737.5 | 2x2 | LTE B30 | 10 | 9820 | 2355 | 2x2 | 23.86 | 23.90 |
| CA_{2A}-{2A}-12A-30A-{66A} | LTE B66 | 10 | 132022 | 1715 | QPSK | 1 | 25 | 66486 | 2115 | 4x4 | LTE B2 | 20 | 900 | 1960 | 4x4 | LTE B2 | 20 | 700 | 1940 | 2x2 | LTE B12 | 10 | 5095 | 737.5 | 2x2 | LTE B30 | 10 | 9820 | 2355 | 4x4 | 23.81 | 23.90 |
| CA_{2A}-{2A}-12A-(30A)-66A | LTE B66 | 10 | 132022 | 1715 | QPSK | 1 | 25 | 66486 | 2115 | 4x4 | LTE B2 | 20 | 900 | 1960 | 4x4 | LTE B2 | 20 | 700 | 1940 | 4x4 | LTE B12 | 10 | 5095 | 737.5 | 2x2 | LTE B30 | 10 | 9820 | 2355 | 4x4 | 23.85 | 23.90 |
| CA_{2A}-{2A}-12A-(30A)-{66A} | LTE B66 | 10 | 132022 | 1715 | QPSK | 1 | 25 | 66486 | 2115 | 4x4 | LTE B2 | 20 | 900 | 1960 | 4x4 | LTE B2 | 20 | 700 | 1940 | 4x4 | LTE B12 | 10 | 5095 | 737.5 | 2x2 | LTE B30 | 10 | 9820 | 2355 | 4x4 | 23.90 | 23.90 |
| CA_{2A-2A-12A-66A-66A} | LTE B66 | 10 | 132022 | 1715 | QPSK | 1 | 25 | 66486 | 2115 | 2x2 | LTE B66 | 20 | 67236 | 2190 | 2x2 | LTE B2 | 20 | 900 | 1960 | 4x4 | LTE B2 | 20 | 700 | 1940 | 2x2 | LTE B12 | 10 | 5095 | 737.5 | 2x2 | 23.97 | 23.90 |
| CA_{2A-2A-12A-66A}-66A | LTE B66 | 10 | 132022 | 1715 | QPSK | 1 | 25 | 66486 | 2115 | 2x2 | LTE B66 | 20 | 67236 | 2190 | 4x4 | LTE B2 | 20 | 900 | 1960 | 2x2 | LTE B2 | 20 | 700 | 1940 | 2x2 | LTE B12 | 10 | 5095 | 737.5 | 2x2 | 23.86 | 23.90 |
| CA_{2A-2A-12A-(66A)-66A} | LTE B66 | 10 | 132022 | 1715 | QPSK | 1 | 25 | 66486 | 2115 | 4x4 | LTE B66 | 20 | 67236 | 2190 | 2x2 | LTE B2 | 20 | 900 | 1960 | 2x2 | LTE B2 | 20 | 700 | 1940 | 2x2 | LTE B12 | 10 | 5095 | 737.5 | 2x2 | 23.84 | 23.90 |
| CA_{2A}-{2A}-12A-66A-66A | LTE B66 | 10 | 132022 | 1715 | QPSK | 1 | 25 | 66486 | 2115 | 2x2 | LTE B66 | 20 | 67236 | 2190 | 4x4 | LTE B2 | 20 | 900 | 1960 | 4x4 | LTE B2 | 20 | 700 | 1940 | 4x4 | LTE B12 | 10 | 5095 | 737.5 | 2x2 | 23.91 | 23.90 |
| CA_{2A}-{2A}-12A-66A-66A | LTE B66 | 10 | 132022 | 1715 | QPSK | 1 | 25 | 66486 | 2115 | 2x2 | LTE B66 | 20 | 67236 | 2190 | 4x4 | LTE B2 | 20 | 900 | 1960 | 4x4 | LTE B2 | 20 | 700 | 1940 | 2x2 | LTE B12 | 10 | 5095 | 737.5 | 2x2 | 23.92 | 23.90 |
| CA_{2A}-{2A}-12A-(66A)-66A | LTE B66 | 10 | 132022 | 1715 | QPSK | 1 | 25 | 66486 | 2115 | 4x4 | LTE B66 | 20 | 67236 | 2190 | 2x2 | LTE B2 | 20 | 900 | 1960 | 4x4 | LTE B2 | 20 | 700 | 1940 | 2x2 | LTE B12 | 10 | 5095 | 737.5 | 2x2 | 23.92 | 23.90 |
| CA_{2A-2A-12A-(66A)}-66A | LTE B66 | 10 | 132022 | 1715 | QPSK | 1 | 25 | 66486 | 2115 | 4x4 | LTE B66 | 20 | 67236 | 2190 | 4x4 | LTE B2 | 20 | 900 | 1960 | 2x2 | LTE B2 | 20 | 700 | 1940 | 2x2 | LTE B12 | 10 | 5095 | 737.5 | 2x2 | 23.88 | 23.90 |
| CA_{2A}-{2A}-12A-(66A)-66A | LTE B66 | 10 | 132022 | 1715 | QPSK | 1 | 25 | 66486 | 2115 | 4x4 | LTE B66 | 20 | 67236 | 2190 | 2x2 | LTE B2 | 20 | 900 | 1960 | 4x4 | LTE B2 | 20 | 700 | 1940 | 4x4 | LTE B12 | 10 | 5095 | 737.5 | 2x2 | 23.91 | 23.90 |
| CA_{2A}-{2A}-12A-66A-66A | LTE B66 | 10 | 132022 | 1715 | QPSK | 1 | 25 | 66486 | 2115 | 2x2 | LTE B66 | 20 | 67236 | 2190 | 4x4 | LTE B2 | 20 | 900 | 1960 | 4x4 | LTE B2 | 20 | 700 | 1940 | 4x4 | LTE B12 | 10 | 5095 | 737.5 | 2x2 | 23.99 | 23.90 |
| CA_{2A}-{2A}-12A-(66A)-{66A} | LTE B66 | 10 | 132022 | 1715 | QPSK | 1 | 25 | 66486 | 2115 | 4x4 | LTE B66 | 20 | 67236 | 2190 | 4x4 | LTE B2 | 20 | 900 | 1960 | 4x4 | LTE B2 | 20 | 700 | 1940 | 2x2 | LTE B12 | 10 | 5095 | 737.5 | 2x2 | 23.90 | 23.90 |
| CA_{2A}-{2A}-12A-(66A)-{66A} | LTE B66 | 10 | 132022 | 1715 | QPSK | 1 | 25 | 66486 | 2115 | 4x4 | LTE B66 | 20 | 67236 | 2190 | 4x4 | LTE B2 | 20 | 900 | 1960 | 4x4 | LTE B2 | 20 | 700 | 1940 | 4x4 | LTE B12 | 10 | 5095 | 737.5 | 2x2 | 23.89 | 23.90 |
| CA_{2A}-2A-12B-66A | LTE B66 | 10 | 132022 | 1715 | QPSK | 1 | 25 | 66486 | 2115 | 2x2 | LTE B2 | 20 | 900 | 1960 | 4x4 | LTE B2 | 20 | 700 | 1940 | 2x2 | LTE B12 | 5 | 5095 | 737.5 | 2x2 | LTE B12 | 5 | 5047 | 732.7 | 2x2 | 23.92 | 23.90 |
| CA_{2A-2A-12B-(66A)} | LTE B66 | 10 | 132022 | 1715 | QPSK | 1 | 25 | 66486 | 2115 | 4x4 | LTE B2 | 20 | 900 | 1960 | 2x2 | LTE B2 | 20 | 700 | 1940 | 2x2 | LTE B12 | 5 | 5095 | 737.5 | 2x2 | LTE B12 | 5 | 5047 | 732.7 | 2x2 | 23.83 | 23.90 |
| CA_{2A}-{2A}-12B-66A | LTE B66 | 10 | 132022 | 1715 | QPSK | 1 | 25 | 66486 | 2115 | 2x2 | LTE B2 | 20 | 900 | 1960 | 4x4 | LTE B2 | 20 | 700 | 1940 | 4x4 | LTE B12 | 5 | 5095 | 737.5 | 2x2 | LTE B12 | 5 | 5047 | 732.7 | 2x2 | 23.97 | 23.90 |
| CA_{2A}-{2A}-12B-{66A} | LTE B66 | 10 | 132022 | 1715 | QPSK | 1 | 25 | 66486 | 2115 | 4x4 | LTE B2 | 20 | 900 | 1960 | 2x2 | LTE B2 | 20 | 700 | 1940 | 2x2 | LTE B12 | 5 | 5095 | 737.5 | 2x2 | LTE B12 | 5 | 5047 | 732.7 | 2x2 | 23.85 | 23.90 |
| CA_{2A}-{2A}-12B-(66A) | LTE B66 | 10 | 132022 | 1715 | QPSK | 1 | 25 | 66486 | 2115 | 4x4 | LTE B2 | 20 | 900 | 1960 | 4x4 | LTE B2 | 20 | 700 | 1940 | 4x4 | LTE B12 | 5 | 5095 | 737.5 | 2x2 | LTE B12 | 5 | 5047 | 732.7 | 2x2 | 23.88 | 23.90 |
| CA_{2A}-2A-13A-66A-66A | LTE B66 | 10 | 132022 | 1715 | QPSK | 1 | 25 | 66486 | 2115 | 2x2 | LTE B66 | 20 | 67236 | 2190 | 2x2 | LTE B2 | 20 | 900 | 1960 | 4x4 | LTE B2 | 20 | 700 | 1940 | 2x2 | LTE B13 | 10 | 5230 | 751 | 2x2 | 23.96 | 23.90 |
| CA_{2A-2A-13A-66A}-66A | LTE B66 | 10 | 132022 | 1715 | QPSK | 1 | 25 | 66486 | 2115 | 2x2 | LTE B66 | 20 | 67236 | 2190 | 4x4 | LTE B2 | 20 | 900 | 1960 | 2x2 | LTE B2 | 20 | 700 | 1940 | 2x2 | LTE B13 | 10 | 5230 | 751 | 2x2 | 23.97 | 23.90 |
| CA_{2A-2A-13A-(66A)-66A} | LTE B66 | 10 | 132022 | 1715 | QPSK | 1 | 25 | 66486 | 2115 | 4x4 | LTE B66 | 20 | 67236 | 2190 | 2x2 | LTE B2 | 20 | 900 | 1960 | 2x2 | LTE B2 | 20 | 700 | 1940 | 2x2 | LTE B13 | 10 | 5230 | 751 | 2x2 | 23.87 | 23.90 |
| CA_{2A}-{2A}-13A-66A-66A | LTE B66 | 10 | 132022 | 1715 | QPSK | 1 | 25 | 66486 | 2115 | 2x2 | LTE B66 | 20 | 67236 | 2190 | 2x2 | LTE B2 | 20 | 900 | 1960 | 4x4 | LTE B2 | 20 | 700 | 1940 | 4x4 | LTE B13 | 10 | 5230 | 751 | 2x2 | 23.90 | 23.90 |
| CA_{2A}-{2A}-13A-66A-{66A} | LTE B66 | 10 | 132022 | 1715 | QPSK | 1 | 25 | 66486 | 2115 | 4x4 | LTE B66 | 20 | 67236 | 2190 | 2x2 | LTE B2 | 20 | 900 | 1960 | 4x4 | LTE B2 | 20 | 700 | 1940 | 2x2 | LTE B13 | 10 | 5230 | 751 | 2x2 | 24.01 | 23.90 |
| CA_{2A}-2A-13A-(66A)-66A | LTE B66 | 10 | 132022 | 1715 | QPSK | 1 | 25 | 66486 | 2115 | 4x4 | LTE B66 | 20 | 67236 | 2190 | 2x2 | LTE B2 | 20 | 900 | 1960 | 4x4 | LTE B2 | 20 | 700 | 1940 | 2x2 | LTE B13 | 10 | 5230 | 751 | 2x2 | 23.88 | 23.90 |
| CA_{2A-2A-13A-(66A)}-66A | LTE B66 | 10 | 132022 | 1715 | QPSK | 1 | 25 | 66486 | 2115 | 4x4 | LTE B66 | 20 | 67236 | 2190 | 4x4 | LTE B2 | 20 | 900 | 1960 | 2x2 | LTE B2 | 20 | 700 | 1940 | 2x2 | LTE B13 | 10 | 5230 | 751 | 2x2 | 23.94 | 23.90 |
| CA_{2A}-{2A}-13A-(66A)-66A | LTE B66 | 10 | 132022 | 1715 | QPSK | 1 | 25 | 66486 | 2115 | 4x4 | LTE B66 | 20 | 67236 | 2190 | 2x2 | LTE B2 | 20 | 900 | 1960 | 4x4 | LTE B2 | 20 | 700 | 1940 | 4x4 | LTE B13 | 10 | 5230 | 751 | 2x2 | 23.84 | 23.90 |
| CA_{2A}-{2A}-13A-(66A)-66A | LTE B66 | 10 | 132022 | 1715 | QPSK | 1 | 25 | 66486 | 2115 | 2x2 | LTE B66 | 20 | 67236 | 2190 | 4x4 | LTE B2 | 20 | 900 | 1960 | 4x4 | LTE B2 | 20 | 700 | 1940 | 4x4 | LTE B13 | 10 | 5230 | 751 | 2x2 | 23.99 | 23.90 |
| CA_{2A}-{2A}-13A-(66A)-{66A} | LTE B66 | 10 | 132022 | 1715 | QPSK | 1 | 25 | 66486 | 2115 | 4x4 | LTE B66 | 20 | 67236 | 2190 | 4x4 | LTE B2 | 20 | 900 | 1960 | 4x4 | LTE B2 | 20 | 700 | 1940 | 2x2 | LTE B13 | 10 | 5230 | 751 | 2x2 | 23.90 | 23.90 |
| CA_{2A}-{2A}-13A-(66A)-{66A} | LTE B66 | 10 | 132022 | 1715 | QPSK | 1 | 25 | 66486 | 2115 | 4x4 | LTE B66 | 20 | 67236 | 2190 | 4x4 | LTE B2 | 20 | 900 | 1960 | 4x4 | LTE B2 | 20 | 700 | 1940 | 4x4 | LTE B13 | 10 | 5230 | 751 | 2x2 | 23.88 | 23.90 |
| CA_{2A}-2A-13A-66B | LTE B66 | 10 | 132022 | 1715 | QPSK | 1 | 25 | 66486 | 2115 | 2x2 | LTE B66 | 10 | 66585 | 2124.9 | 2x2 | LTE B2 | 20 | 900 | 1960 | 4x4 | LTE B2 | 20 | 700 | 1940 | 2x2 | LTE B13 | 10 | 5230 | 751 | 2x2 | 23.95 | 23.90 |
| CA_{2A-2A-13A-{66B}} | LTE B66 | 10 | 132022 | 1715 | QPSK | 1 | 25 | 66486 | 2115 | 4x4 | LTE B66 | 10 | 66585 | 2124.9 | 4x4 | LTE B2 | 20 | 900 | 1960 | 2x2 | LTE B2 | 20 | 700 | 1940 | 4x4 | LTE B13 | 10 | 5230 | 751 | 2x2 | 23.87 | 23.90 |
| CA_{2A}-{2A}-13A-66B | LTE B66 | 10 | 132022 | 1715 | QPSK | 1 | 25 | 66486 | 2115 | 2x2 | LTE B66 | 10 | 66585 | 2124.9 | 2x2 | LTE B2 | 20 | 900 | 1960 | 4x4 | LTE B2 | 20 | 700 | 1940 | 2x2 | LTE B13 | 10 | 5230 | 751 | 2x2 | 23.94 | 23.90 |
| CA_{2A}-{2A}-13A-66B | LTE B66 | 10 | 132022 | 1715 | QPSK | 1 | 25 | 66486 | 2115 | 4x4 | LTE B66 | 10 | 66585 | 2124.9 | 4x4 | LTE B2 | 20 | 900 | 1960 | 4x4 | LTE B2 | 20 | 700 | 1940 | 4x4 | LTE B13 | 10 | 5230 | 751 | 2x2 | 23.86 | 23.90 |
| CA_{2A}-{2A}-13A-(66B) | LTE B66 | 10 | 132022 | 1715 | QPSK | 1 | 25 | 66486 | 2115 | 4x4 | LTE B66 | 10 | 66585 | 2124.9 | 4x4 | LTE B2 | 20 | 900 | 1960 | 4x4 | LTE B2 | 20 | 700 | 1940 | 4x4 | LTE B13 | 10 | 5230 | 751 | 2x2 | 23.90 | 23.90 |
| CA_{2A}-2A-14A-30A-66A | LTE B66 | 10 | 132022 | 1715 | QPSK | 1 | 25 | 66486 | 2115 | 2x2 | LTE B2 | 20 | 900 | 1960 | 2x2 | LTE B2 | 20 | 700 | 1940 | 2x2 | LTE B14 | 10 | 5330 | 763 | 2x2 | LTE B30 | 10 | 9820 | 2355 | 4x4 | 23.93 | 23.90 |
| CA_{2A-2A-14A-(30A)-66A} | LTE B66 | 10 | 132022 | 1715 | QPSK | 1 | 25 | 66486 | 2115 | 2x2 | LTE B2 | 20 | 900 | 1960 | 2x2 | LTE B2 | 20 | 700 | 1940 | 2x2 | LTE B14 | 10 | 5330 | 763 | 2x2 | LTE B30 | 10 | 9820 | 2355 | 4x4 | 23.92 | 23.90 |
| CA_{2A-2A-14A-30A}-66A | LTE B66 | 10 | 132022 | 1715 | QPSK | 1 | 25 | 66486 | 2115 | 2x2 | LTE B2 | 20 | 900 | 1960 | 2x2 | LTE B2 | 20 | 700 | 1940 | 2x2 | LTE B14 | 10 | 5330 | 763 | 2x2 | LTE B30 | 10 | 9820 | 2355 | 2x2 | 23.84 | 23.90 |
| CA_{2A}-{2A}-14A-30A-66A | LTE B66 | 10 | 132022 | 1715 | QPSK | 1 | 25 | 66486 | 2115 | 2x2 | LTE B2 | 20 | 900 | 1960 | 4x4 | LTE B2 | 20 | 700 | 1940 | 4x4 | LTE B14 | 10 | 5330 | 763 | 2x2 | LTE B30 | 10 | 9820 | 2355 | 2x2 | 23.91 | 23.90 |
| CA_{2A}-2A-14A-(30A)-66A | LTE B66 | 10 | 132022 | 1715 | QPSK | 1 | 25 | 66486 | 2115 | 2x2 | LTE B2 | 20 | 900 | 1960 | 4x4 | LTE B2 | 20 | 700 | 1940 | 2x2 | LTE B14 | 10 | 5330 | 763 | 2x2 | LTE B30 | 10 | 9820 | 2355 | 4x4 | 23.93 | 23.90 |
| CA_{2A}-{2A}-14A-30A-66A | LTE B66 | 10 | 132022 | 1715 | QPSK | 1 | 25 | 66486 | 2115 | 4x4 | LTE B2 | 20 | 900 | 1960 | 4x4 | LTE B2 | 20 | 700 | 1940 | 2x2 | LTE B14 | 10 | 5330 | 763 | 2x2 | LTE B30 | 10 | 9820 | 2355 | 2x2 | 23.86 | 23.90 |
| CA_{2A-2A-14A-(30A)}-66A | LTE B66 | 10 | 132022 | 1715 | Q

| Combination | PCC Band | PCC BW [MHz] | PCC [UL] Ch. | PCC [UL] Freq. [MHz] | Mod. | PCC UL# RB | PCC UL RB Offset | SCC [DL] Ch. | PCC [DL] Freq. [MHz] | DL Ant. Config. | SCC Band | SCC BW [MHz] | SCC [DL] Ch. | SCC [DL] Freq. [MHz] | DL Ant. Config. | SCC Band | SCC BW [MHz] | SCC [DL] Ch. | SCC [DL] Freq. [MHz] | DL Ant. Config. | SCC Band | SCC BW [MHz] | SCC [DL] Ch. | SCC [DL] Freq. [MHz] | DL Ant. Config. | SCC Band | SCC BW [MHz] | SCC [DL] Ch. | SCC [DL] Freq. [MHz] | DL Ant. Config. | Power: LTE Tx Power with DL CA Enabled | Power: LTE Single Carrier Tx Power [dBm] |
|---|---|---|---|---|---|---|---|---|---|---|---|---|---|---|---|---|---|---|---|---|---|---|---|---|---|---|---|---|---|---|---|---|
| CA_2A-5A-13A-[66A] | LTE B66 | 10 | 131012 | 1715 | QPSK | 1 | 25 | 66486 | 2115 | 4x4 | LTE B66 | 20 | 37236 | 2160 | 4x4 | LTE B2 | 20 | 900 | 1960 | 2x2 | LTE B5 | 10 | 2525 | 881.5 | 2x2 | LTE B13 | 10 | 9820 | 2355 | 4x4 | 22.50 | 22.50 |
| CA_2A-5A-13A-[66A] | LTE B66 | 10 | 131012 | 1715 | QPSK | 1 | 25 | 66486 | 2115 | 4x4 | LTE B66 | 20 | 37236 | 2160 | 4x4 | LTE B2 | 20 | 900 | 1960 | 2x2 | LTE B5 | 10 | 2525 | 881.5 | 2x2 | LTE B13 | 10 | 9820 | 2355 | 2x2 | 22.50 | 22.50 |
| CA_2A-5A-13A-[66A] | LTE B66 | 10 | 131012 | 1715 | QPSK | 1 | 25 | 66486 | 2115 | 4x4 | LTE B66 | 20 | 37236 | 2160 | 4x4 | LTE B2 | 20 | 900 | 1960 | 4x4 | LTE B5 | 10 | 2525 | 881.5 | 2x2 | LTE B13 | 10 | 9820 | 2355 | 4x4 | 22.50 | 22.50 |
| CA_2A-5A-13A-[66A] | LTE B66 | 10 | 131012 | 1715 | QPSK | 1 | 25 | 66486 | 2115 | 4x4 | LTE B66 | 20 | 37236 | 2160 | 4x4 | LTE B2 | 20 | 900 | 1960 | 4x4 | LTE B5 | 10 | 2525 | 881.5 | 2x2 | LTE B13 | 10 | 9820 | 2355 | 2x2 | 22.50 | 22.50 |
| CA_2A-5A-13A-[66A] | LTE B66 | 10 | 131012 | 1715 | QPSK | 1 | 25 | 66486 | 2115 | 4x4 | LTE B66 | 20 | 37236 | 2160 | 4x4 | LTE B2 | 20 | 900 | 1960 | 4x4 | LTE B5 | 10 | 2525 | 881.5 | 2x2 | LTE B13 | 10 | 9820 | 2355 | 4x4 | 22.50 | 22.50 |
| CA_2A-5A-13A-[66A] | LTE B66 | 10 | 131012 | 1715 | QPSK | 1 | 25 | 66486 | 2115 | 4x4 | LTE B66 | 20 | 37236 | 2160 | 4x4 | LTE B2 | 20 | 900 | 1960 | 4x4 | LTE B5 | 10 | 2525 | 881.5 | 2x2 | LTE B13 | 10 | 9820 | 2355 | 4x4 | 22.50 | 22.50 |
| CA_2A-5B-66A-[66A] | LTE B66 | 10 | 131012 | 1715 | QPSK | 1 | 25 | 66486 | 2115 | 4x4 | LTE B66 | 20 | 37236 | 2160 | 4x4 | LTE B2 | 20 | 900 | 1960 | 2x2 | LTE B5 | 5 | 2463 | 874.3 | 2x2 | LTE B66 | 20 | 66911 | 3625 | 4x4 | 22.50 | 22.50 |
| CA_2A-5B-66A-[66A] | LTE B66 | 10 | 131012 | 1715 | QPSK | 1 | 25 | 66486 | 2115 | 4x4 | LTE B66 | 20 | 37236 | 2160 | 4x4 | LTE B2 | 20 | 900 | 1960 | 2x2 | LTE B5 | 5 | 2463 | 874.3 | 2x2 | LTE B66 | 20 | 66911 | 3625 | 4x4 | 22.50 | 22.50 |
| CA_2A-5B-66A-[66A] | LTE B66 | 10 | 131012 | 1715 | QPSK | 1 | 25 | 66486 | 2115 | 4x4 | LTE B66 | 20 | 37236 | 2160 | 4x4 | LTE B2 | 20 | 900 | 1960 | 4x4 | LTE B5 | 5 | 2463 | 874.3 | 2x2 | LTE B66 | 20 | 66911 | 3625 | 4x4 | 22.50 | 22.50 |
| CA_2A-5B-66A-[66A] | LTE B66 | 10 | 131012 | 1715 | QPSK | 1 | 25 | 66486 | 2115 | 4x4 | LTE B66 | 20 | 37236 | 2160 | 4x4 | LTE B2 | 20 | 900 | 1960 | 4x4 | LTE B5 | 5 | 2463 | 874.3 | 2x2 | LTE B66 | 20 | 66911 | 3625 | 4x4 | 22.50 | 22.50 |
| CA_2A-5B-[66A]-66A | LTE B66 | 10 | 131012 | 1715 | QPSK | 1 | 25 | 66486 | 2115 | 4x4 | LTE B66 | 20 | 37236 | 2160 | 4x4 | LTE B2 | 20 | 900 | 1960 | 2x2 | LTE B5 | 5 | 2463 | 874.3 | 2x2 | LTE B66 | 20 | 66911 | 3625 | 4x4 | 22.50 | 22.50 |
| CA_2A-5B-[66A]-66A | LTE B66 | 10 | 131012 | 1715 | QPSK | 1 | 25 | 66486 | 2115 | 4x4 | LTE B66 | 20 | 37236 | 2160 | 4x4 | LTE B2 | 20 | 900 | 1960 | 2x2 | LTE B5 | 5 | 2463 | 874.3 | 2x2 | LTE B66 | 20 | 66911 | 3625 | 4x4 | 22.50 | 22.50 |
| CA_2A-5B-[66A]-66A | LTE B66 | 10 | 131012 | 1715 | QPSK | 1 | 25 | 66486 | 2115 | 4x4 | LTE B66 | 20 | 37236 | 2160 | 4x4 | LTE B2 | 20 | 900 | 1960 | 4x4 | LTE B5 | 5 | 2463 | 874.3 | 2x2 | LTE B66 | 20 | 66911 | 3625 | 4x4 | 22.50 | 22.50 |
| CA_2A-5B-[66A]-66A | LTE B66 | 10 | 131012 | 1715 | QPSK | 1 | 25 | 66486 | 2115 | 4x4 | LTE B66 | 20 | 37236 | 2160 | 4x4 | LTE B2 | 20 | 900 | 1960 | 4x4 | LTE B5 | 5 | 2463 | 874.3 | 2x2 | LTE B66 | 20 | 66911 | 3625 | 4x4 | 22.50 | 22.50 |
| CA_2A-5A-13A-[66A]-66A | LTE B66 | 10 | 131012 | 1715 | QPSK | 1 | 25 | 66486 | 2115 | 2x2 | LTE B66 | 20 | 37236 | 2160 | 4x4 | LTE B2 | 20 | 900 | 1960 | 4x4 | LTE B5 | 10 | 2525 | 881.5

| Combination | PCC | | | | PCC | | | | | | SCC 1 | | | | | | SCC 2 | | | | | | SCC 3 | | | | | | SCC 4 | | | | | | SCC 5 | | | | | | SCC 6 | | | | | | Power | |
|---|---|---|---|---|---|---|---|---|---|---|---|---|---|---|---|---|---|---|---|---|---|---|---|---|---|---|---|---|---|---|---|---|---|---|---|---|---|---|---|---|---|---|---|---|---|---|---|---|
| | PCC Band | PCC BW [MHz] | PCC (UL) Ch. | PCC (UL) Freq. [MHz] | Mod. | PCC UL# RB | PCC UL RB Offset | PCC (DL) Ch. | PCC (DL) Freq. [MHz] | DL Ant. Config. | SCC Band | SCC BW [MHz] | SCC (UL) Ch. | S

## 1.4.10 **LTE Band 30 as PCC**

**Table 21**
**Maximum Output Powers**

| | PCC | | | | | | | | | SCC 1 | | | | | | SCC 2 | | | | | | SCC 3 | | | | | | SCC 4 | | | | | Power | |
|---|---|---|---|---|---|---|---|---|---|---|---|---|---|---|---|---|---|---|---|---|---|---|---|---|---|---|---|---|---|---|---|---|---|---|
| Combination | PCC Band | PCC BW [MHz] | PCC (UL) Ch. | PCC (UL) Freq. [MHz] | Mod. | PCC UL# RB | PCC UL RB Offset | PCC (DL) Ch. | PCC (DL) Freq. [MHz] | DL Ant. Config. | SCC Band | SCC BW [MHz] | SCC (DL) Ch. | SCC (DL) Freq. [MHz] | DL Ant. Config. | SCC Band | SCC BW [MHz] | SCC (DL) Ch. | SCC (DL) Freq. [MHz] | DL Ant. Config. | SCC Band | SCC BW [MHz] | SCC (DL) Ch. | SCC (DL) Freq. [MHz] | DL Ant. Config. | SCC Band | SCC BW [MHz] | SCC (DL) Ch. | SCC (DL) Freq. [MHz] | DL Ant. Config. | LTE Tx.Power with DL CA Enabled | LTE Single Carrier Tx Power (dBm) |
| CA_[2A]-2A-29A-30A | LTE B30 | 10 | 27710 | 2310 | QPSK | 1 | 25 | 9820 | 2355 | 2x2 | LTE B2 | 20 | 900 | 1960 | 4x4 | LTE B2 | 20 | 700 | 1940 | 2x2 | LTE B29 | 10 | 9715 | 722.5 | 2x2 | - | - | - | - | - | 23.26 | 23.24 |
| CA_2A-2A-29A-[30A] | LTE B30 | 10 | 27710 | 2310 | QPSK | 1 | 25 | 9820 | 2355 | 4x4 | LTE B2 | 20 | 900 | 1960 | 2x2 | LTE B2 | 20 | 700 | 1940 | 2x2 | LTE B29 | 10 | 9715 | 722.5 | 2x2 | - | - | - | - | - | 23.25 | 23.24 |
| CA_[2A]-[2A]-29A-30A | LTE B30 | 10 | 27710 | 2310 | QPSK | 1 | 25 | 9820 | 2355 | 2x2 | LTE B2 | 20 | 900 | 1960 | 4x4 | LTE B2 | 20 | 700 | 1940 | 4x4 | LTE B29 | 10 | 9715 | 722.5 | 2x2 | - | - | - | - | - | 23.31 | 23.24 |
| CA_[2A]-2A-29A-[30A] | LTE B30 | 10 | 27710 | 2310 | QPSK | 1 | 25 | 9820 | 2355 | 4x4 | LTE B2 | 20 | 900 | 1960 | 4x4 | LTE B2 | 20 | 700 | 1940 | 2x2 | LTE B29 | 10 | 9715 | 722.5 | 2x2 | - | - | - | - | - | 23.23 | 23.24 |
| CA_[2A]-[2A]-29A-[30A] | LTE B30 | 10 | 27710 | 2310 | QPSK | 1 | 25 | 9820 | 2355 | 4x4 | LTE B2 | 20 | 900 | 1960 | 4x4 | LTE B2 | 20 | 700 | 1940 | 4x4 | LTE B29 | 10 | 9715 | 722.5 | 2x2 | - | - | - | - | - | 23.28 | 23.24 |
| CA_[2A]-29A-30A-66A | LTE B30 | 10 | 27710 | 2310 | QPSK | 1 | 25 | 9820 | 2355 | 2x2 | LTE B2 | 20 | 900 | 1960 | 4x4 | LTE B29 | 10 | 9715 | 722.5 | 2x2 | LTE B66 | 20 | 66786 | 2145 | 2x2 | - | - | - | - | - | 23.23 | 23.24 |
| CA_2A-29A-[30A]-66A | LTE B30 | 10 | 27710 | 2310 | QPSK | 1 | 25 | 9820 | 2355 | 4x4 | LTE B2 | 20 | 900 | 1960 | 2x2 | LTE B29 | 10 | 9715 | 722.5 | 2x2 | LTE B66 | 20 | 66786 | 2145 | 2x2 | - | - | - | - | - | 23.19 | 23.24 |
| CA_2A-29A-30A-[66A] | LTE B30 | 10 | 27710 | 2310 | QPSK | 1 | 25 | 9820 | 2355 | 2x2 | LTE B2 | 20 | 900 | 1960 | 2x2 | LTE B29 | 10 | 9715 | 722.5 | 2x2 | LTE B66 | 20 | 66786 | 2145 | 4x4 | - | - | - | - | - | 23.27 | 23.24 |
| CA_[2A]-29A-[30A]-66A | LTE B30 | 10 | 27710 | 2310 | QPSK | 1 | 25 | 9820 | 2355 | 4x4 | LTE B2 | 20 | 900 | 1960 | 4x4 | LTE B29 | 10 | 9715 | 722.5 | 2x2 | LTE B66 | 20 | 66786 | 2145 | 2x2 | - | - | - | - | - | 23.21 | 23.24 |
| CA_[2A]-29A-30A-[66A] | LTE B30 | 10 | 27710 | 2310 | QPSK | 1 | 25 | 9820 | 2355 | 2x2 | LTE B2 | 20 | 900 | 1960 | 4x4 | LTE B29 | 10 | 9715 | 722.5 | 2x2 | LTE B66 | 20 | 66786 | 2145 | 4x4 | - | - | - | - | - | 23.18 | 23.24 |
| CA_2A-29A-[30A]-[66A] | LTE B30 | 10 | 27710 | 2310 | QPSK | 1 | 25 | 9820 | 2355 | 4x4 | LTE B2 | 20 | 900 | 1960 | 2x2 | LTE B29 | 10 | 9715 | 722.5 | 2x2 | LTE B66 | 20 | 66786 | 2145 | 4x4 | - | - | - | - | - | 23.19 | 23.24 |
| CA_[2A]-29A-[30A]-[66A] | LTE B30 | 10 | 27710 | 2310 | QPSK | 1 | 25 | 9820 | 2355 | 4x4 | LTE B2 | 20 | 900 | 1960 | 4x4 | LTE B29 | 10 | 9715 | 722.5 | 2x2 | LTE B66 | 20 | 66786 | 2145 | 4x4 | - | - | - | - | - | 23.19 | 23.24 |
| CA_[2A]-30A-66A-[66A] | LTE B30 | 10 | 27710 | 2310 | QPSK | 1 | 25 | 9820 | 2355 | 2x2 | LTE B2 | 20 | 900 | 1960 | 4x4 | LTE B66 | 20 | 66786 | 2145 | 4x4 | LTE B66 | 20 | 67236 | 2190 | 4x4 | - | - | - | - | - | 23.25 | 23.24 |
| CA_29A-30A-66A-66A | LTE B30 | 10 | 27710 | 2310 | QPSK | 1 | 25 | 9820 | 2355 | 4x4 | LTE B29 | 10 | 9715 | 722.5 | 2x2 | LTE B66 | 20 | 66786 | 2145 | 2x2 | LTE B66 | 20 | 67236 | 2190 | 2x2 | - | - | - | - | - | 23.25 | 23.24 |
| CA_29A-30A-[66A]-66A | LTE B30 | 10 | 27710 | 2310 | QPSK | 1 | 25 | 9820 | 2355 | 2x2 | LTE B29 | 10 | 9715 | 722.5 | 2x2 | LTE B66 | 20 | 66786 | 2145 | 4x4 | LTE B66 | 20 | 67236 | 2190 | 2x2 | - | - | - | - | - | 23.28 | 23.24 |
| CA_29A-[30A]-[66A]-66A | LTE B30 | 10 | 27710 | 2310 | QPSK | 1 | 25 | 9820 | 2355 | 4x4 | LTE B29 | 10 | 9715 | 722.5 | 2x2 | LTE B66 | 20 | 66786 | 2145 | 4x4 | LTE B66 | 20 | 67236 | 2190 | 2x2 | - | - | - | - | - | 23.31 | 23.24 |
| CA_29A-30A-[66A]-[66A] | LTE B30 | 10 | 27710 | 2310 | QPSK | 1 | 25 | 9820 | 2355 | 2x2 | LTE B29 | 10 | 9715 | 722.5 | 2x2 | LTE B66 | 20 | 66786 | 2145 | 4x4 | LTE B66 | 20 | 67236 | 2190 | 4x4 | - | - | - | - | - | 23.23 | 23.24 |
| CA_29A-[30A]-[66A]-[66A] | LTE B30 | 10 | 27710 | 2310 | QPSK | 1 | 25 | 9820 | 2355 | 4x4 | LTE B29 | 10 | 9715 | 722.5 | 2x2 | LTE B66 | 20 | 66786 | 2145 | 4x4 | LTE B66 | 20 | 67236 | 2190 | 4x4 | - | - | - | - | - | 23.22 | 23.24 |
| CA_[2A]-2A-5A-30A-66A | LTE B30 | 10 | 27710 | 2310 | QPSK | 1 | 25 | 9820 | 2355 | 2x2 | LTE B2 | 20 | 900 | 1960 | 4x4 | LTE B2 | 20 | 700 | 1940 | 2x2 | LTE B5 | 10 | 2525 | 881.5 | 2x2 | LTE B66 | 20 | 66786 | 2145 | 2x2 | 23.27 | 23.24 |
| CA_2A-2A-5A-[30A]-66A | LTE B30 | 10 | 27710 | 2310 | QPSK | 1 | 25 | 9820 | 2355 | 4x4 | LTE B2 | 20 | 900 | 1960 | 2x2 | LTE B2 | 20 | 700 | 1940 | 2x2 | LTE B5 | 10 | 2525 | 881.5 | 2x2 | LTE B66 | 20 | 66786 | 2145 | 2x2 | 23.32 | 23.24 |
| CA_2A-2A-5A-30A-[66A] | LTE B30 | 10 | 27710 | 2310 | QPSK | 1 | 25 | 9820 | 2355 | 2x2 | LTE B2 | 20 | 900 | 1960 | 2x2 | LTE B2 | 20 | 700 | 1940 | 2x2 | LTE B5 | 10 | 2525 | 881.5 | 2x2 | LTE B66 | 20 | 66786 | 2145 | 4x4 | 23.24 | 23.24 |
| CA_[2A]-[2A]-5A-30A-66A | LTE B30 | 10 | 27710 | 2310 | QPSK | 1 | 25 | 9820 | 2355 | 2x2 | LTE B2 | 20 | 900 | 1960 | 4x4 | LTE B2 | 20 | 700 | 1940 | 4x4 | LTE B5 | 10 | 2525 | 881.5 | 2x2 | LTE B66 | 20 | 66786 | 2145 | 2x2 | 23.25 | 23.24 |
| CA_[2A]-2A-5A-[30A]-66A | LTE B30 | 10 | 27710 | 2310 | QPSK | 1 | 25 | 9820 | 2355 | 4x4 | LTE B2 | 20 | 900 | 1960 | 4x4 | LTE B2 | 20 | 700 | 1940 | 2x2 | LTE B5 | 10 | 2525 | 881.5 | 2x2 | LTE B66 | 20 | 66786 | 2145 | 2x2 | 23.26 | 23.24 |
| CA_[2A]-2A-5A-30A-[66A] | LTE B30 | 10 | 27710 | 2310 | QPSK | 1 | 25 | 9820 | 2355 | 2x2 | LTE B2 | 20 | 900 | 1960 | 4x4 | LTE B2 | 20 | 700 | 1940 | 2x2 | LTE B5 | 10 | 2525 | 881.5 | 2x2 | LTE B66 | 20 | 66786 | 2145 | 4x4 | 23.28 | 23.24 |
| CA_2A-2A-5A-[30A]-[66A] | LTE B30 | 10 | 27710 | 2310 | QPSK | 1 | 25 | 9820 | 2355 | 4x4 | LTE B2 | 20 | 900 | 1960 | 2x2 | LTE B2 | 20 | 700 | 1940 | 2x2 | LTE B5 | 10 | 2525 | 881.5 | 2x2 | LTE B66 | 20 | 66786 | 2145 | 4x4 | 23.26 | 23.24 |
| CA_[2A]-[2A]-5A-[30A]-66A | LTE B30 | 10 | 27710 | 2310 | QPSK | 1 | 25 | 9820 | 2355 | 4x4 | LTE B2 | 20 | 900 | 1960 | 4x4 | LTE B2 | 20 | 700 | 1940 | 4x4 | LTE B5 | 10 | 2525 | 881.5 | 2x2 | LTE B66 | 20 | 66786 | 2145 | 4x4 | 23.36 | 23.24 |
| CA_[2A]-2A-5A-[30A]-[66A] | LTE B30 | 10 | 27710 | 2310 | QPSK | 1 | 25 | 9820 | 2355 | 4x4 | LTE B2 | 20 | 900 | 1960 | 4x4 | LTE B2 | 20 | 700 | 1940 | 4x4 | LTE B5 | 10 | 2525 | 881.5 | 2x2 | LTE B66 | 20 | 66786 | 2145 | 4x4 | 23.34 | 23.24 |
| CA_[2A]-[2A]-5A-[30A]-[66A] | LTE B30 | 10 | 27710 | 2310 | QPSK | 1 | 25 | 9820 | 2355 | 4x4 | LTE B2 | 20 | 900 | 1960 | 4x4 | LTE B2 | 20 | 700 | 1940 | 4x4 | LTE B5 | 10 | 2525 | 881.5 | 2x2 | LTE B66 | 20 | 66786 | 2145 | 4x4 | 23.35 | 23.24 |
| CA_[2A]-2A-12A-30A-66A | LTE B30 | 10 | 27710 | 2310 | QPSK | 1 | 25 | 9820 | 2355 | 2x2 | LTE B2 | 20 | 900 | 1960 | 4x4 | LTE B2 | 20 | 700 | 1940 | 2x2 | LTE B12 | 10 | 5095 | 737.5 | 2x2 | LTE B66 | 20 | 66786 | 2145 | 2x2 | 23.30 | 23.24 |
| CA_2A-2A-12A-[30A]-66A | LTE B30 | 10 | 27710 | 2310 | QPSK | 1 | 25 | 9820 | 2355 | 4x4 | LTE B2 | 20 | 900 | 1960 | 2x2 | LTE B2 | 20 | 700 | 1940 | 2x2 | LTE B12 | 10 | 5095 | 737.5 | 2x2 | LTE B66 | 20 | 66786 | 2145 | 2x2 | 23.19 | 23.24 |
| CA_2A-2A-12A-30A-[66A] | LTE B30 | 10 | 27710 | 2310 | QPSK | 1 | 25 | 9820 | 2355 | 2x2 | LTE B2 | 20 | 900 | 1960 | 2x2 | LTE B2 | 20 | 700 | 1940 | 2x2 | LTE B12 | 10 | 5095 | 737.5 | 2x2 | LTE B66 | 20 | 66786 | 2145 | 4x4 | 23.25 | 23.24 |
| CA_[2A]-[2A]-12A-30A-66A | LTE B30 | 10 | 27710 | 2310 | QPSK | 1 | 25 | 9820 | 2355 | 2x2 | LTE B2 | 20 | 900 | 1960 | 4x4 | LTE B2 | 20 | 700 | 1940 | 4x4 | LTE B12 | 10 | 5095 | 737.5 | 2x2 | LTE B66 | 20 | 66786 | 2145 | 2x2 | 23.30 | 23.24 |
| CA_[2A]-2A-12A-[30A]-66A | LTE B30 | 10 | 27710 | 2310 | QPSK | 1 | 25 | 9820 | 2355 | 4x4 | LTE B2 | 20 | 900 | 1960 | 4x4 | LTE B2 | 20 | 700 | 1940 | 2x2 | LTE B12 | 10 | 5095 | 737.5 | 2x2 | LTE B66 | 20 | 66786 | 2145 | 2x2 | 23.30 | 23.24 |
| CA_[2A]-2A-12A-30A-[66A] | LTE B30 | 10 | 27710 | 2310 | QPSK | 1 | 25 | 9820 | 2355 | 2x2 | LTE B2 | 20 | 900 | 1960 | 4x4 | LTE B2 | 20 | 700 | 1940 | 2x2 | LTE B12 | 10 | 5095 | 737.5 | 2x2 | LTE B66 | 20 | 66786 | 2145 | 4x4 | 23.24 | 23.24 |
| CA_2A-2A-12A-[30A]-[66A] | LTE B30 | 10 | 27710 | 2310 | QPSK | 1 | 25 | 9820 | 2355 | 4x4 | LTE B2 | 20 | 900 | 1960 | 2x2 | LTE B2 | 20 | 700 | 1940 | 2x2 | LTE B12 | 10 | 5095 | 737.5 | 2x2 | LTE B66 | 20 | 66786 | 2145 | 4x4 | 23.21 | 23.24 |
| CA_[2A]-[2A]-12A-[30A]-66A | LTE B30 | 10 | 27710 | 2310 | QPSK | 1 | 25 | 9820 | 2355 | 4x4 | LTE B2 | 20 | 900 | 1960 | 4x4 | LTE B2 | 20 | 700 | 1940 | 4x4 | LTE B12 | 10 | 5095 | 737.5 | 2x2 | LTE B66 | 20 | 66786 | 2145 | 2x2 | 23.24 | 23.24 |
| CA_[2A]-[2A]-12A-[30A]-[66A] | LTE B30 | 10 | 27710 | 2310 | QPSK | 1 | 25 | 9820 | 2355 | 4x4 | LTE B2 | 20 | 900 | 1960 | 4x4 | LTE B2 | 20 | 700 | 1940 | 4x4 | LTE B12 | 10 | 5095 | 737.5 | 2x2 | LTE B66 | 20 | 66786 | 2145 | 4x4 | 23.23 | 23.24 |
| CA_[2A]-2A-12A-[30A]-[66A] | LTE B30 | 10 | 27710 | 2310 | QPSK | 1 | 25 | 9820 | 2355 | 4x4 | LTE B2 | 20 | 900 | 1960 | 4x4 | LTE B2 | 20 | 700 | 1940 | 2x2 | LTE B12 | 10 | 5095 | 737.5 | 2x2 | LTE B66 | 20 | 66786 | 2145 | 4x4 | 23.20 | 23.24 |
| CA_[2A]-[2A]-12A-[30A]-[66A] | LTE B30 | 10 | 27710 | 2310 | QPSK | 1 | 25 | 9820 | 2355 | 4x4 | LTE B2 | 20 | 900 | 1960 | 4x4 | LTE B2 | 20 | 700 | 1940 | 4x4 | LTE B12 | 10 | 5095 | 737.5 | 2x2 | LTE B66 | 20 | 66786 | 2145 | 4x4 | 23.22 | 23.24 |
| CA_[2A]-2A-14A-30A-66A | LTE B30 | 10 | 27710 | 2310 | QPSK | 1 | 25 | 9820 | 2355 | 2x2 | LTE B2 | 20 | 900 | 1960 | 4x4 | LTE B2 | 20 | 700 | 1940 | 2x2 | LTE B14 | 10 | 5330 | 763 | 2x2 | LTE B66 | 20 | 66786 | 2145 | 2x2 | 23.22 | 23.24 |
| CA_2A-2A-14A-[30A]-66A | LTE B30 | 10 | 27710 | 2310 | QPSK | 1 | 25 | 9820 | 2355 | 4x4 | LTE B2 | 20 | 900 | 1960 | 2x2 | LTE B2 | 20 | 700 | 1940 | 2x2 | LTE B14 | 10 | 5330 | 763 | 2x2 | LTE B66 | 20 | 66786 | 2145 | 2x2 | 23.21 | 23.24 |
| CA_2A-2A-14A-30A-[66A] | LTE B30 | 10 | 27710 | 2310 | QPSK | 1 | 25 | 9820 | 2355 | 2x2 | LTE B2 | 20 | 900 | 1960 | 2x2 | LTE B2 | 20 | 700 | 1940 | 2x2 | LTE B14 | 10 | 5330 | 763 | 2x2 | LTE B66 | 20 | 66786 | 2145 | 4x4 | 23.21 | 23.24 |
| CA_[2A]-[2A]-14A-30A-66A | LTE B30 | 10 | 27710 | 2310 | QPSK | 1 | 25 | 9820 | 2355 | 2x2 | LTE B2 | 20 | 900 | 1960 | 4x4 | LTE B2 | 20 | 700 | 1940 | 4x4 | LTE B14 | 10 | 5330 | 763 | 2x2 | LTE B66 | 20 | 66786 | 2145 | 2x2 | 23.19 | 23.24 |
| CA_[2A]-2A-14A-[30A]-66A | LTE B30 | 10 | 27710 | 2310 | QPSK | 1 | 25 | 9820 | 2355 | 4x4 | LTE B2 | 20 | 900 | 1960 | 4x4 | LTE B2 | 20 | 700 | 1940 | 2x2 | LTE B14 | 10 | 5330 | 763 | 2x2 | LTE B66 | 20 | 66786 | 2145 | 2x2 | 23.28 | 23.24 |
| CA_[2A]-2A-14A-[30A]-[66A] | LTE B30 | 10 | 27710 | 2310 | QPSK | 1 | 25 | 9820 | 2355 | 2x2 | LTE B2 | 20 | 900 | 1960 | 4x4 | LTE B2 | 20 | 700 | 1940 | 2x2 | LTE B14 | 10 | 5330 | 763 | 2x2 | LTE B66 | 20 | 66786 | 2145 | 4x4 | 23.19 | 23.24 |
| CA_2A-2A-14A-[30A]-[66A] | LTE B30 | 10 | 27710 | 2310 | QPSK | 1 | 25 | 9820 | 2355 | 4x4 | LTE B2 | 20 | 900 | 1960 | 2x2 | LTE B2 | 20 | 700 | 1940 | 2x2 | LTE B14 | 10 | 5330 | 763 | 2x2 | LTE B66 | 20 | 66786 | 2145 | 4x4 | 23.31 | 23.24 |
| CA_[2A]-[2A]-14A-[30A]-66A | LTE B30 | 10 | 27710 | 2310 | QPSK | 1 | 25 | 9820 | 2355 | 4x4 | LTE B2 | 20 | 900 | 1960 | 4x4 | LTE B2 | 20 | 700 | 1940 | 4x4 | LTE B14 | 10 | 5330 | 763 | 2x2 | LTE B66 | 20 | 66786 | 2145 | 2x2 | 23.13 | 23.24 |
| CA_[2A]-[2A]-14A-30A-[66A] | LTE B30 | 10 | 27710 | 2310 | QPSK | 1 | 25 | 9820 | 2355 | 2x2 | LTE B2 | 20 | 900 | 1960 | 4x4 | LTE B2 | 20 | 700 | 1940 | 4x4 | LTE B14 | 10 | 5330 | 763 | 2x2 | LTE B66 | 20 | 66786 | 2145 | 4x4 | 23.21 | 23.24 |
| CA_[2A]-2A-14A-[30A]-[66A] | LTE B30 | 10 | 27710 | 2310 | QPSK | 1 | 25 | 9820 | 2355 | 4x4 | LTE B2 | 20 | 900 | 1960 | 4x4 | LTE B2 | 20 | 700 | 1940 | 2x2 | LTE B14 | 10 | 5330 | 763 | 2x2 | LTE B66 | 20 | 66786 | 2145 | 4x4 | 23.29 | 23.24 |
| CA_[2A]-[2A]-14A-[30A]-[66A] | LTE B30 | 10 | 27710 | 2310 | QPSK | 1 | 25 | 9820 | 2355 | 4x4 | LTE B2 | 20 | 900 | 1960 | 4x4 | LTE B2 | 20 | 700 | 1940 | 4x4 | LTE B14 | 10 | 5330 | 763 | 2x2 | LTE B66 | 20 | 66786 | 2145 | 4x4 | 23.29 | 23.24 |
| CA_[2A]-2A-5A-30A-66A-66A | LTE B30 | 10 | 27710 | 2310 | QPSK | 1 | 25 | 9820 | 2355 | 2x2 | LTE B2 | 20 | 900 | 1960 | 4x4 | LTE B5 | 10 | 2525 | 881.5 | 2x2 | LTE B66 | 20 | 66786 | 2145 | 2x2 | LTE B66 | 20 | 67236 | 2190 | 2x2 | 23.20 | 23.24 |
| CA_2A-5A-[30A]-66A-66A | LTE B30 | 10 | 27710 | 2310 | QPSK | 1 | 25 | 9820 | 2355 | 4x4 | LTE B2 | 20 | 900 | 1960 | 2x2 | LTE B5 | 10 | 2525 | 881.5 | 2x2 | LTE B66 | 20 | 66786 | 2145 | 2x2 | LTE B66 | 20 | 67236 | 2190 | 2x2 | 23.22 | 23.24 |
| CA_2A-5A-30A-[66A]-66A | LTE B30 | 10 | 27710 | 2310 | QPSK | 1 | 25 | 9820 | 2355 | 2x2 | LTE B2 | 20 | 900 | 1960 | 2x2 | LTE B5 | 10 | 2525 | 881.5 | 2x2 | LTE B66 | 20 | 66786 | 2145 | 4x4 | LTE B66 | 20 | 67236 | 2190 | 2x2 | 23.19 | 23.24 |
| CA_[2A]-5A-[30A]-66A-66A | LTE B30 | 10 | 27710 | 2310 | QPSK | 1 | 25 | 9820 | 2355 | 4x4 | LTE B2 | 20 | 900 | 1960 | 4x4 | LTE B5 | 10 | 2525 | 881.5 | 2x2 | LTE B66 | 20 | 66786 | 2145 | 2x2 | LTE B66 | 20 | 67236 | 2190 | 2x2 | 23.26 | 23.24 |
| CA_[2A]-5A-30A-[66A]-66A | LTE B30 | 10 | 27710 | 2310 | QPSK | 1 | 25 | 9820 | 2355 | 2x2 | LTE B2 | 20 | 900 | 1960 | 4x4 | LTE B5 | 10 | 2525 | 881.5 | 2x2 | LTE B66 | 20 | 66786 | 2145 | 4x4 | LTE B66 | 20 | 67236 | 2190 | 2x2 | 23.29 | 23.24 |
| CA_2A-5A-30A-[66A]-66A | LTE B30 | 10 | 27710 | 2310 | QPSK | 1 | 25 | 9820 | 2355 | 4x4 | LTE B2 | 20 | 900 | 1960 | 2x2 | LTE B5 | 10 | 2525 | 881.5 | 2x2 | LTE B66 | 20 | 66786 | 2145 | 4x4 | LTE B66 | 20 | 67236 | 2190 | 4x4 | 23.41 | 23.24 |
| CA_2A-5A-30A-[66A]-[66A] | LTE B30 | 10 | 27710 | 2310 | QPSK | 1 | 25 | 9820 | 2355 | 2x2 | LTE B2 | 20 | 900 | 1960 | 2x2 | LTE B5 | 10 | 2525 | 881.5 | 2x2 | LTE B66 | 20 | 66786 | 2145 | 4x4 | LTE B66 | 20 | 67236 | 2190 | 4x4 | 23.22 | 23.24 |
| CA_[2A]-5A-[30A]-[66A]-66A | LTE B30 | 10 | 27710 | 2310 | QPSK | 1 | 25 | 9820 | 2355 | 4x4 | LTE B2 | 20 | 900 | 1960 | 4x4 | LTE B5 | 10 | 2525 | 881.5 | 2x2 | LTE B66 | 20 | 66786 | 2145 | 4x4 | LTE B66 | 20 | 67236 | 2190 | 2x2 | 23.32 | 23.24 |
| CA_2A-5A-[30A]-[66A]-[66A] | LTE B30 | 10 | 27710 | 2310 | QPSK | 1 | 25 | 9820 | 2355 | 4x4 | LTE B2 | 20 | 900 | 1960 | 2x2 | LTE B5 | 10 | 2525 | 881.5 | 2x2 | LTE B66 | 20 | 66786 | 2145 | 4x4 | LTE B66 | 20 | 67236 | 2190 | 4x4 | 23.28 | 23.24 |
| CA_[2A]-5A-[30A]-[66A]-[66A] | LTE B30 | 10 | 27710 | 2310 | QPSK | 1 | 25 | 9820 | 2355 | 4x4 | LTE B2 | 20 | 900 | 1960 | 4x4 | LTE B5 | 10 | 2525 | 881.5 | 2x2 | LTE B66 | 20 | 66786 | 2145 | 4x4 | LTE B66 | 20 | 67236 | 2190 | 4x4 | 23.26 | 23.24 |
| CA_[2A]-5B-30A-66A | LTE B30 | 10 | 27710 | 2310 | QPSK | 1 | 25 | 9820 | 2355 | 2x2 | LTE B2 | 20 | 900 | 1960 | 4x4 | LTE B5 | 10 | 2525 | 881.5 | 2x2 | LTE B5 | 5 | 2453 | 874.3 | 2x2 | LTE B66 | 20 | 66786 | 2145 | 2x2 | 23.21 | 23.24 |
| CA_2A-5B-[30A]-66A | LTE B30 | 10 | 27710 | 2310 | QPSK | 1 | 25 | 9820 | 2355 | 4x4 | LTE B2 | 20 | 900 | 1960 | 2x2 | LTE B5 | 10 | 2525 | 881.5 | 2x2 | LTE B5 | 5 | 2453 | 874.3 | 2x2 | LTE B66 | 20 | 66786 | 2145 | 2x2 | 23.24 | 23.24 |
| CA_2A-5B-30A-[66A] | LTE B30 | 10 | 27710 | 2310 | QPSK | 1 | 25 | 9820 | 2355 | 2x2 | LTE B2 | 20 | 900 | 1960 | 2x2 | LTE B5 | 10 | 2525 | 881.5 | 2x2 | LTE B5 | 5 | 2453 | 874.3 | 2x2 | LTE B66 | 20 | 66786 | 2145 | 4x4 | 23.17 | 23.24 |
| CA_[2A]-5B-[30A]-66A | LTE B30 | 10 | 27710 | 2310 | QPSK | 1 | 25 | 9820 | 2355 | 4x4 | LTE B2 | 20 | 900 | 1960 | 4x4 | LTE B5 | 10 | 2525 | 881.5 | 2x2 | LTE B5 | 5 | 2453 | 874.3 | 2x2 | LTE B66 | 20 | 66786 | 2145 | 2x2 | 23.18 | 23.24 |
| CA_[2A]-5B-30A-[66A] | LTE B30 | 10 | 27710 | 2310 | QPSK | 1 | 25 | 9820 | 2355 | 2x2 | LTE B2 | 20 | 900 | 1960 | 4x4 | LTE B5 | 10 | 2525 | 881.5 | 2x2 | LTE B5 | 5 | 2453 | 874.3 | 2x2 | LTE B66 | 20 | 66786 | 2145 | 4x4 | 23.21 | 23.24 |
| CA_2A-5B-[30A]-[66A] | LTE B30 | 10 | 27710 | 2310 | QPSK | 1 | 25 | 9820 | 2355 | 4x4 | LTE B2 | 20 | 900 | 1960 | 2x2 | LTE B5 | 10 | 2525 | 881.5 | 2x2 | LTE B5 | 5 | 2453 | 874.3 | 2x2 | LTE B66 | 20 | 66786 | 2145 | 4x4 | 23.23 | 23.24 |
| CA_[2A]-5B-30A-[66A]-[66A] | LTE B30 | 10 | 27710 | 2310 | QPSK | 1 | 25 | 9820 | 2355 | 4x4 | LTE B2 | 20 | 900 | 1960 | 4x4 | LTE B5 | 10 | 2525 | 881.5 | 2x2 | LTE B5 | 5 | 2453 | 874.3 | 2x2 | LTE B66 | 20 | 66786 | 2145 | 4x4 | 23.28 | 23.24 |
| CA_[2A]-12A-30A-66A-66A | LTE B30 | 10 | 27710 | 2310 | QPSK | 1 | 25 | 9820 | 2355 | 2x2 | LTE B2 | 20 | 900 | 1960 | 2x2 | LTE B12 | 10 | 5095 | 737.5 | 2x2 | LTE B66 | 20 | 66786 | 2145 | 2x2 | LTE B66 | 20 | 67236 | 2190 | 2x2 | 23.23 | 23.24 |
| CA_2A-12A-[30A]-66A-66A | LTE B30 | 10 | 27710 | 2310 | QPSK | 1 | 25 | 9820 | 2355 | 4x4 | LTE B2 | 20 | 900 | 1960 | 2x2 | LTE B12 | 10 | 5095 | 737.5 | 2x2 | LTE B66 | 20 | 66786 | 2145 | 2x2 | LTE B66 | 20 | 67236 | 2190 | 2x2 | 23.21 | 23.24 |
| CA_2A-12A-30A-[66A]-66A | LTE B30 | 10 | 27710 | 2310 | QPSK | 1 | 25 | 9820 | 2355 | 2x2 | LTE B2 | 20 | 900 | 1960 | 2x2 | LTE B12 | 10 | 5095 | 737.5 | 2x2 | LTE B66 | 20 | 66786 | 2145 | 4x4 | LTE B66 | 20 | 67236 | 2190 | 2x2 | 23.24 | 23.24 |
| CA_[2A]-12A-30A-[66A]-66A | LTE B30 | 10 | 27710 | 2310 | QPSK | 1 | 25 | 9820 | 2355 | 4x4 | LTE B2 | 20 | 900 | 1960 | 2x2 | LTE B12 | 10 | 5095 | 737.5 | 2x2 | LTE B66 | 20 | 66786 | 2145 | 4x4 | LTE B66 | 20 | 67236 | 2190 | 2x2 | 23.17 | 23.24 |
| CA_[2A]-12A-[30A]-66A-66A | LTE B30 | 10 | 27710 | 2310 | QPSK | 1 | 25 | 9820 | 2355 | 4x4 | LTE B2 | 20 | 900 | 1960 | 2x2 | LTE B12 | 10 | 5095 | 737.5 | 2x2 | LTE B66 | 20 | 66786 | 2145 | 2x2 | LTE B66 | 20 | 67236 | 2190 | 2x2 | 23.18 | 23.24 |
| CA_2A-12A-[30A]-[66A]-66A | LTE B30 | 10 | 27710 | 2310 | QPSK | 1 | 25 | 9820 | 2355 | 4x4 | LTE B2 | 20 | 900 | 1960 | 2x2 | LTE B12 | 10 | 5095 | 737.5 | 2x2 | LTE B66 | 20 | 66786 | 2145 | 4x4 | LTE B66 | 20 | 67236 | 2190 | 2x2 | 23.25 | 23.24 |
| CA_[2A]-12A-[30A]-[66A]-66A | LTE B30 | 10 | 27710 | 2310 | QPSK | 1 | 25 | 9820 | 2355 | 4x4 | LTE B2 | 20 | 900 | 1960 | 2x2 | LTE B12 | 10 | 5095 | 737.5 | 2x2 | LTE B66 | 20 | 66786 | 2145 | 4x4 | LTE B66 | 20 | 67236 | 2190 | 4x4 | 23.23 | 23.24 |
| CA_[2A]-12A-[30A]-[66A]-[66A] | LTE B30 | 10 | 27710 | 2310 | QPSK | 1 | 25 | 9820 | 2355 | 4x4 | LTE B2 | 20 | 900 | 1960 | 2x2 | LTE B12 | 10 | 5095 | 737.5 | 2x2 | LTE B66 | 20 | 66786 | 2145 | 4x4 | LTE B66 | 20 | 67236 | 2190 | 4x4 | 23.21 | 23.24 |
| CA_[2A]-14A-30A-66A-66A | LTE B30 | 10 | 27710 | 2310 | QPSK | 1 | 25 | 9820 | 2355 | 2x2 | LTE B2 | 20 | 900 | 1960 | 2x2 | LTE B14 | 10 | 5330 | 763 | 2x2 | LTE B66 | 20 | 66786 | 2145 | 2x2 | LTE B66 | 20 | 67236 | 2190 | 2x2 | 23.29 | 23.24 |
| CA_2A-14A-[30A]-66A-66A | LTE B30 | 10 | 27710 | 2310 | QPSK | 1 | 25 | 9820 | 2355 | 4x4 | LTE B2 | 20 | 900 | 1960 | 2x2 | LTE B14 | 10 | 5330 | 763 | 2x2 | LTE B66 | 20 | 66786 | 2145 | 2x2 | LTE B66 | 20 | 67236 | 2190 | 2x2 | 23.21 | 23.24 |
| CA_2A-14A-30A-[66A]-66A | LTE B30 | 10 | 27710 | 2310 | QPSK | 1 | 25 | 9820 | 2355 | 2x2 | LTE B2 | 20 | 900 | 1960 | 2x2 | LTE B14 | 10 | 5330 | 763 | 2x2 | LTE B66 | 20 | 66786 | 2145 | 4x4 | LTE B66 | 20 | 67236 | 2190 | 2x2 | 23.23 | 23.24 |
| CA_2A-14A-[30A]-[66A]-66A | LTE B30 | 10 | 27710 | 2310 | QPSK | 1 | 25 | 9820 | 2355 | 4x4 | LTE B2 | 20 | 900 | 1960 | 2x2 | LTE B14 | 10 | 5330 | 763 | 2x2 | LTE B66 | 20 | 66786 | 2145 | 4x4 | LTE B66 | 20 | 67236 | 2190 | 2x2 | 23.29 | 23.24 |
| CA_[2A]-14A-30A-[66A]-66A | LTE B30 | 10 | 27710 | 2310 | QPSK | 1 | 25 | 9820 | 2355 | 2x2 | LTE B2 | 20 | 900 | 1960 | 4x4 | LTE B14 | 10 | 5330 | 763 | 2x2 | LTE B66 | 20 | 66786 | 2145 | 4x4 | LTE B66 | 20 | 67236 | 2190 | 2x2 | 23.21 | 23.24 |
| CA_[2A]-14A-[30A]-66A-66A | LTE B30 | 10 | 27710 | 2310 | QPSK | 1 | 25 | 9820 | 2355 | 4x4 | LTE B2 | 20 | 900 | 1960 | 2x2 | LTE B14 | 10 | 5330 | 763 | 2x2 | LTE B66 | 20 | 66786 | 2145 | 4x4 | LTE B66 | 20 | 67236 | 2190 | 2x2 | 23.22 | 23.24 |
| CA_[2A]-14A-[30A]-[66A]-66A | LTE B30 | 10 | 27710 | 2310 | QPSK | 1 | 25 | 9820 | 2355 | 4x4 | LTE B2 | 20 | 900 | 1960 | 2x2 | LTE B14 | 10 | 5330 | 763 | 2x2 | LTE B66 | 20 | 66786 | 2145 | 4x4 | LT

## 1.4.11 LTE Band 41 as PCC

**Table 22**
**Maximum Output Powers**

| | PCC | | | | | | | | | | SCC 1 | | | | | | SCC 2 | | | | | | SCC 3 | | | | | | SCC 4 | | | | | Power | |
|---|---|---|---|---|---|---|---|---|---|---|---|---|---|---|---|---|---|---|---|---|---|---|---|---|---|---|---|---|---|---|---|---|---|---|---|
| Combination | PCC Band | PCC BW [MHz] | PCC (UL) Ch. | PCC (UL) Freq. [MHz] | Mod. | PCC UL# RB | PCC UL RB Offset | PCC (DL) Ch. | PCC (DL) Freq. [MHz] | DL Ant. Config. | SCC Band | SCC BW [MHz] | SCC (DL) Ch. | SCC (DL) Freq. [MHz] | DL Ant. Config. | SCC Band | SCC BW [MHz] | SCC (DL) Ch. | SCC (DL) Freq. [MHz] | DL Ant. Config. | SCC Band | SCC BW [MHz] | SCC (DL) Ch. | SCC (DL) Freq. [MHz] | DL Ant. Config. | SCC Band | SCC BW [MHz] | SCC (DL) Ch. | SCC (DL) Freq. [MHz] | DL Ant. Config. | LTE Tx.Power with DL CA Enabled | LTE Single Carrier Tx Power (dBm) |
| CA_{41A}-41A (1) | LTE B41 | 10 | 40620 | 2593 | QPSK | 1 | 25 | 40620 | 2593 | 4x4 | LTE B41 | 20 | 41490 | 2680 | 2x2 | - | - | - | - | - | - | - | - | - | - | - | - | - | - | - | 24.54 | 24.56 |
| CA_{41A-41A} (1) | LTE B41 | 10 | 40620 | 2593 | QPSK | 1 | 25 | 40620 | 2593 | 2x2 | LTE B41 | 20 | 41490 | 2680 | 4x4 | - | - | - | - | - | - | - | - | - | - | - | - | - | - | - | 24.53 | 24.56 |
| CA_{41A-41A} (1) | LTE B41 | 10 | 40620 | 2593 | QPSK | 1 | 25 | 40620 | 2593 | 4x4 | LTE B41 | 20 | 41490 | 2680 | 4x4 | - | - | - | - | - | - | - | - | - | - | - | - | - | - | - | 24.63 | 24.56 |
| CA_{41A}-41C | LTE B41 | 10 | 40620 | 2593 | QPSK | 1 | 25 | 40620 | 2593 | 4x4 | LTE B41 | 20 | 41292 | 2660.2 | 2x2 | LTE B41 | 20 | 41490 | 2680 | 2x2 | - | - | - | - | - | - | - | - | - | - | - | 24.44 | 24.56 |
| CA_41C-{41A} | LTE B41 | 10 | 40620 | 2593 | QPSK | 1 | 25 | 40620 | 2593 | 2x2 | LTE B41 | 20 | 40764 | 2607.4 | 2x2 | LTE B41 | 20 | 41490 | 2680 | 4x4 | - | - | - | - | - | - | - | - | - | - | - | 24.42 | 24.56 |
| CA_41A-{41C} | LTE B41 | 10 | 40620 | 2593 | QPSK | 1 | 25 | 40620 | 2593 | 2x2 | LTE B41 | 20 | 41292 | 2660.2 | 4x4 | LTE B41 | 20 | 41490 | 2680 | 4x4 | - | - | - | - | - | - | - | - | - | - | - | 24.57 | 24.56 |
| CA_{41C}-41A | LTE B41 | 10 | 40620 | 2593 | QPSK | 1 | 25 | 40620 | 2593 | 4x4 | LTE B41 | 20 | 40764 | 2607.4 | 4x4 | LTE B41 | 20 | 41490 | 2680 | 2x2 | - | - | - | - | - | - | - | - | - | - | - | 24.55 | 24.56 |
| CA_{41A}-{41C} | LTE B41 | 10 | 40620 | 2593 | QPSK | 1 | 25 | 40620 | 2593 | 4x4 | LTE B41 | 20 | 41292 | 2660.2 | 4x4 | LTE B41 | 20 | 41490 | 2680 | 4x4 | - | - | - | - | - | - | - | - | - | - | - | 24.69 | 24.56 |
| CA_{41C}-{41A} | LTE B41 | 10 | 40620 | 2593 | QPSK | 1 | 25 | 40620 | 2593 | 4x4 | LTE B41 | 20 | 40764 | 2607.4 | 4x4 | LTE B41 | 20 | 41490 | 2680 | 4x4 | - | - | - | - | - | - | - | - | - | - | - | 24.77 | 24.56 |
| CA_{41A}-41D | LTE B41 | 10 | 40620 | 2593 | QPSK | 1 | 25 | 40620 | 2593 | 4x4 | LTE B41 | 20 | 41094 | 2640.4 | 2x2 | LTE B41 | 20 | 41292 | 2660.2 | 2x2 | LTE B41 | 20 | 41490 | 2680 | 2x2 | - | - | - | - | - | 24.69 | 24.56 |
| CA_41D-{41A} | LTE B41 | 10 | 40620 | 2593 | QPSK | 1 | 25 | 40620 | 2593 | 2x2 | LTE B41 | 20 | 40476 | 2578.6 | 2x2 | LTE B41 | 20 | 40764 | 2607.4 | 2x2 | LTE B41 | 20 | 41490 | 2680 | 4x4 | - | - | - | - | - | 24.57 | 24.56 |
| CA_41A-{41D} | LTE B41 | 10 | 40620 | 2593 | QPSK | 1 | 25 | 40620 | 2593 | 2x2 | LTE B41 | 20 | 41094 | 2640.4 | 4x4 | LTE B41 | 20 | 41292 | 2660.2 | 4x4 | LTE B41 | 20 | 41490 | 2680 | 4x4 | - | - | - | - | - | 24.55 | 24.56 |
| CA_{41D}-41A | LTE B41 | 10 | 40620 | 2593 | QPSK | 1 | 25 | 40620 | 2593 | 4x4 | LTE B41 | 20 | 40476 | 2578.6 | 4x4 | LTE B41 | 20 | 40764 | 2607.4 | 4x4 | LTE B41 | 20 | 41490 | 2680 | 2x2 | - | - | - | - | - | 24.65 | 24.56 |
| CA_{41A}-{41D} | LTE B41 | 10 | 40620 | 2593 | QPSK | 1 | 25 | 40620 | 2593 | 4x4 | LTE B41 | 20 | 41094 | 2640.4 | 4x4 | LTE B41 | 20 | 41292 | 2660.2 | 4x4 | LTE B41 | 20 | 41490 | 2680 | 4x4 | - | - | - | - | - | 24.67 | 24.56 |
| CA_{41D}-{41A} | LTE B41 | 10 | 40620 | 2593 | QPSK | 1 | 25 | 40620 | 2593 | 4x4 | LTE B41 | 20 | 40476 | 2578.6 | 4x4 | LTE B41 | 20 | 40764 | 2607.4 | 4x4 | LTE B41 | 20 | 41490 | 2680 | 4x4 | - | - | - | - | - | 24.66 | 24.56 |
| CA_{41C}-41C | LTE B41 | 10 | 40620 | 2593 | QPSK | 1 | 25 | 40620 | 2593 | 4x4 | LTE B41 | 20 | 40476 | 2578.6 | 4x4 | LTE B41 | 20 | 41292 | 2660.2 | 2x2 | LTE B41 | 20 | 41490 | 2680 | 2x2 | - | - | - | - | - | 24.64 | 24.56 |
| CA_41C-{41C} | LTE B41 | 10 | 40620 | 2593 | QPSK | 1 | 25 | 40620 | 2593 | 2x2 | LTE B41 | 20 | 40476 | 2578.6 | 2x2 | LTE B41 | 20 | 41292 | 2660.2 | 4x4 | LTE B41 | 20 | 41490 | 2680 | 4x4 | - | - | - | - | - | 24.56 | 24.56 |
| CA_{41C}-{41C} | LTE B41 | 10 | 40620 | 2593 | QPSK | 1 | 25 | 40620 | 2593 | 4x4 | LTE B41 | 20 | 40476 | 2578.6 | 4x4 | LTE B41 | 20 | 41292 | 2660.2 | 4x4 | LTE B41 | 20 | 41490 | 2680 | 4x4 | - | - | - | - | - | 24.64 | 24.56 |
| CA_{41E} | LTE B41 | 15 | 40620 | 2593 | QPSK | 1 | 36 | 40620 | 2593 | 4x4 | LTE B41 | 20 | 40449 | 2575.9 | 4x4 | LTE B41 | 20 | 40791 | 2610.1 | 4x4 | LTE B41 | 20 | 40889 | 2629.9 | 4x4 | - | - | - | - | - | 24.49 | 24.36 |
| CA_{41C}-41D | LTE B41 | 10 | 40620 | 2593 | QPSK | 1 | 25 | 40620 | 2593 | 4x4 | LTE B41 | 20 | 40476 | 2578.6 | 4x4 | LTE B41 | 20 | 41094 | 2640.4 | 2x2 | LTE B41 | 20 | 41292 | 2660.2 | 2x2 | LTE B41 | 20 | 41490 | 2680 | 2x2 | 24.66 | 24.56 |
| CA_41D-{41C} | LTE B41 | 10 | 40620 | 2593 | QPSK | 1 | 25 | 40620 | 2593 | 2x2 | LTE B41 | 20 | 40476 | 2578.6 | 2x2 | LTE B41 | 20 | 40764 | 2607.4 | 2x2 | LTE B41 | 20 | 41292 | 2660.2 | 4x4 | LTE B41 | 20 | 41490 | 2680 | 4x4 | 24.56 | 24.56 |
| CA_41C-{41D} | LTE B41 | 10 | 40620 | 2593 | QPSK | 1 | 25 | 40620 | 2593 | 2x2 | LTE B41 | 20 | 40476 | 2578.6 | 2x2 | LTE B41 | 20 | 41094 | 2640.4 | 4x4 | LTE B41 | 20 | 41292 | 2660.2 | 4x4 | LTE B41 | 20 | 41490 | 2680 | 4x4 | 24.53 | 24.56 |
| CA_41D-{41C} | LTE B41 | 10 | 40620 | 2593 | QPSK | 1 | 25 | 40620 | 2593 | 4x4 | LTE B41 | 20 | 40476 | 2578.6 | 4x4 | LTE B41 | 20 | 40764 | 2607.4 | 4x4 | LTE B41 | 20 | 41292 | 2660.2 | 2x2 | LTE B41 | 20 | 41490 | 2680 | 2x2 | 24.68 | 24.56 |
| CA_{41C}-{41D} | LTE B41 | 10 | 40620 | 2593 | QPSK | 1 | 25 | 40620 | 2593 | 4x4 | LTE B41 | 20 | 40476 | 2578.6 | 4x4 | LTE B41 | 20 | 41094 | 2640.4 | 4x4 | LTE B41 | 20 | 41292 | 2660.2 | 4x4 | LTE B41 | 20 | 41490 | 2680 | 4x4 | 24.71 | 24.56 |
| CA_{41D}-{41C} | LTE B41 | 10 | 40620 | 2593 | QPSK | 1 | 25 | 40620 | 2593 | 4x4 | LTE B41 | 20 | 40476 | 2578.6 | 4x4 | LTE B41 | 20 | 40764 | 2607.4 | 4x4 | LTE B41 | 20 | 41292 | 2660.2 | 4x4 | LTE B41 | 20 | 41490 | 2680 | 4x4 | 24.71 | 24.56 |

## 1.4.12 LTE Band 48 as PCC

**Table 23**
**Maximum Output Powers**

| | PCC | | | | | | | | | | SCC 1 | | | | | | SCC 2 | | | | | | SCC 3 | | | | | | SCC 4 | | | | | Power | |
|---|---|---|---|---|---|---|---|---|---|---|---|---|---|---|---|---|---|---|---|---|---|---|---|---|---|---|---|---|---|---|---|---|---|---|---|
| Combination | PCC Band | PCC BW [MHz] | PCC (UL) Ch. | PCC (UL) Freq. [MHz] | Mod. | PCC UL# RB | PCC UL RB Offset | PCC (DL) Ch. | PCC (DL) Freq. [MHz] | DL Ant. Config. | SCC Band | SCC BW [MHz] | SCC (DL) Ch. | SCC (DL) Freq. [MHz] | DL Ant. Config. | SCC Band | SCC BW [MHz] | SCC (DL) Ch. | SCC (DL) Freq. [MHz] | DL Ant. Config. | SCC Band | SCC BW [MHz] | SCC (DL) Ch. | SCC (DL) Freq. [MHz] | DL Ant. Config. | SCC Band | SCC BW [MHz] | SCC (DL) Ch. | SCC (DL) Freq. [MHz] | DL Ant. Config. | LTE Tx.Power with DL CA Enabled | LTE Single Carrier Tx Power (dBm) |
| CA_48A-{48A} | LTE B48 | 10 | 56690 | 3695 | QPSK | 25 | 12 | 56690 | 3695 | 2x2 | LTE B48 | 20 | 55340 | 3560 | 4x4 | - | - | - | - | - | - | - | - | - | - | - | - | - | - | - | 22.72 | 22.74 |
| CA_{48A}-48A | LTE B48 | 10 | 56690 | 3695 | QPSK | 25 | 12 | 56690 | 3695 | 4x4 | LTE B48 | 20 | 55340 | 3560 | 2x2 | - | - | - | - | - | - | - | - | - | - | - | - | - | - | - | 22.87 | 22.74 |
| CA_{48A}-{48A} | LTE B48 | 10 | 56690 | 3695 | QPSK | 25 | 12 | 56690 | 3695 | 4x4 | LTE B48 | 20 | 55340 | 3560 | 4x4 | - | - | - | - | - | - | - | - | - | - | - | - | - | - | - | 22.92 | 22.74 |
| CA_{48A}-48C | LTE B48 | 10 | 56690 | 3695 | QPSK | 25 | 12 | 56690 | 3695 | 4x4 | LTE B48 | 20 | 55340 | 3560 | 2x2 | LTE B48 | 20 | 55538 | 3579.8 | 2x2 | - | - | - | - | - | - | - | - | - | - | 22.70 | 22.74 |
| CA_48C-{48A} | LTE B48 | 10 | 56690 | 3695 | QPSK | 25 | 12 | 56690 | 3695 | 2x2 | LTE B48 | 20 | 56546 | 3680.6 | 2x2 | LTE B48 | 20 | 55340 | 3560 | 4x4 | - | - | - | - | - | - | - | - | - | - | 22.72 | 22.74 |
| CA_48A-{48C} | LTE B48 | 10 | 56690 | 3695 | QPSK | 25 | 12 | 56690 | 3695 | 2x2 | LTE B48 | 20 | 55340 | 3560 | 4x4 | LTE B48 | 20 | 55538 | 3579.8 | 4x4 | - | - | - | - | - | - | - | - | - | - | 22.76 | 22.74 |
| CA_{48C}-48A | LTE B48 | 10 | 56690 | 3695 | QPSK | 25 | 12 | 56690 | 3695 | 4x4 | LTE B48 | 20 | 56546 | 3680.6 | 4x4 | LTE B48 | 20 | 55340 | 3560 | 2x2 | - | - | - | - | - | - | - | - | - | - | 22.71 | 22.74 |
| CA_{48A}-{48C} | LTE B48 | 10 | 56690 | 3695 | QPSK | 25 | 12 | 56690 | 3695 | 4x4 | LTE B48 | 20 | 55340 | 3560 | 4x4 | LTE B48 | 20 | 55538 | 3579.8 | 4x4 | - | - | - | - | - | - | - | - | - | - | 22.65 | 22.74 |
| CA_{48C}-{48A} | LTE B48 | 10 | 56690 | 3695 | QPSK | 25 | 12 | 56690 | 3695 | 4x4 | LTE B48 | 20 | 56546 | 3680.6 | 4x4 | LTE B48 | 20 | 55340 | 3560 | 4x4 | - | - | - | - | - | - | - | - | - | - | 22.70 | 22.74 |
| CA_{48A}-48D | LTE B48 | 10 | 56690 | 3695 | QPSK | 25 | 12 | 56690 | 3695 | 4x4 | LTE B48 | 20 | 55340 | 3560 | 2x2 | LTE B48 | 20 | 55538 | 3579.8 | 2x2 | LTE B48 | 20 | 55736 | 3599.6 | 2x2 | - | - | - | - | - | 22.74 | 22.74 |
| CA_48D-{48A} | LTE B48 | 10 | 56690 | 3695 | QPSK | 25 | 12 | 56690 | 3695 | 2x2 | LTE B48 | 20 | 56546 | 3680.6 | 2x2 | LTE B48 | 20 | 56348 | 3660.8 | 2x2 | LTE B48 | 20 | 55340 | 3560 | 4x4 | - | - | - | - | - | 22.72 | 22.74 |
| CA_48A-{48D} | LTE B48 | 10 | 56690 | 3695 | QPSK | 25 | 12 | 56690 | 3695 | 2x2 | LTE B48 | 20 | 55340 | 3560 | 4x4 | LTE B48 | 20 | 55538 | 3579.8 | 4x4 | LTE B48 | 20 | 55736 | 3599.6 | 4x4 | - | - | - | - | - | 22.83 | 22.74 |
| CA_{48D}-48A | LTE B48 | 10 | 56690 | 3695 | QPSK | 25 | 12 | 56690 | 3695 | 4x4 | LTE B48 | 20 | 56546 | 3680.6 | 4x4 | LTE B48 | 20 | 56348 | 3660.8 | 4x4 | LTE B48 | 20 | 55340 | 3560 | 2x2 | - | - | - | - | - | 22.84 | 22.74 |
| CA_{48A}-{48D} | LTE B48 | 10 | 56690 | 3695 | QPSK | 25 | 12 | 56690 | 3695 | 4x4 | LTE B48 | 20 | 55340 | 3560 | 4x4 | LTE B48 | 20 | 55538 | 3579.8 | 4x4 | LTE B48 | 20 | 55736 | 3599.6 | 4x4 | - | - | - | - | - | 22.66 | 22.74 |
| CA_{48D}-{48A} | LTE B48 | 10 | 56690 | 3695 | QPSK | 25 | 12 | 56690 | 3695 | 4x4 | LTE B48 | 20 | 56546 | 3680.6 | 4x4 | LTE B48 | 20 | 56348 | 3660.8 | 4x4 | LTE B48 | 20 | 55340 | 3560 | 4x4 | - | - | - | - | - | 22.64 | 22.74 |
| CA_48C-{48C} | LTE B48 | 10 | 56690 | 3695 | QPSK | 25 | 12 | 56690 | 3695 | 2x2 | LTE B48 | 20 | 56546 | 3680.6 | 2x2 | LTE B48 | 20 | 55340 | 3560 | 4x4 | LTE B48 | 20 | 55538 | 3579.8 | 4x4 | - | - | - | - | - | 22.79 | 22.74 |
| CA_{48C}-48C | LTE B48 | 10 | 56690 | 3695 | QPSK | 25 | 12 | 56690 | 3695 | 4x4 | LTE B48 | 20 | 56546 | 3680.6 | 4x4 | LTE B48 | 20 | 55340 | 3560 | 2x2 | LTE B48 | 20 | 55538 | 3579.8 | 2x2 | - | - | - | - | - | 22.65 | 22.74 |
| CA_{48C}-{48C} | LTE B48 | 10 | 56690 | 3695 | QPSK | 25 | 12 | 56690 | 3695 | 4x4 | LTE B48 | 20 | 56546 | 3680.6 | 4x4 | LTE B48 | 20 | 55340 | 3560 | 4x4 | LTE B48 | 20 | 55538 | 3579.8 | 4x4 | - | - | - | - | - | 22.69 | 22.74 |
| CA_{48A}-48E | LTE B48 | 10 | 56690 | 3695 | QPSK | 25 | 12 | 56690 | 3695 | 4x4 | LTE B48 | 20 | 55340 | 3560 | 2x2 | LTE B48 | 20 | 55538 | 3579.8 | 2x2 | LTE B48 | 20 | 55736 | 3599.6 | 2x2 | LTE B48 | 20 | 55934 | 3619.4 | 2x2 | 22.83 | 22.74 |
| CA_48E-{48A} | LTE B48 | 10 | 56690 | 3695 | QPSK | 25 | 12 | 56690 | 3695 | 2x2 | LTE B48 | 20 | 56546 | 3680.6 | 2x2 | LTE B48 | 20 | 56348 | 3660.8 | 2x2 | LTE B48 | 20 | 56096 | 3635.6 | 2x2 | LTE B48 | 20 | 55340 | 3560 | 4x4 | 22.65 | 22.74 |
| CA_48A-{48E} | LTE B48 | 10 | 56690 | 3695 | QPSK | 25 | 12 | 56690 | 3695 | 2x2 | LTE B48 | 20 | 55340 | 3560 | 4x4 | LTE B48 | 20 | 55538 | 3579.8 | 4x4 | LTE B48 | 20 | 55736 | 3599.6 | 4x4 | LTE B48 | 20 | 55934 | 3619.4 | 4x4 | 22.75 | 22.74 |
| CA_{48E}-48A | LTE B48 | 10 | 56690 | 3695 | QPSK | 25 | 12 | 56690 | 3695 | 4x4 | LTE B48 | 20 | 56546 | 3680.6 | 4x4 | LTE B48 | 20 | 56348 | 3660.8 | 4x4 | LTE B48 | 20 | 56096 | 3635.6 | 4x4 | LTE B48 | 20 | 55340 | 3560 | 2x2 | 22.69 | 22.74 |
| CA_{48A}-{48E} | LTE B48 | 10 | 56690 | 3695 | QPSK | 25 | 12 | 56690 | 3695 | 4x4 | LTE B48 | 20 | 55340 | 3560 | 4x4 | LTE B48 | 20 | 55538 | 3579.8 | 4x4 | LTE B48 | 20 | 55736 | 3599.6 | 4x4 | LTE B48 | 20 | 55934 | 3619.4 | 4x4 | 22.74 | 22.74 |
| CA_{48E}-{48A} | LTE B48 | 10 | 56690 | 3695 | QPSK | 25 | 12 | 56690 | 3695 | 4x4 | LTE B48 | 20 | 56546 | 3680.6 | 4x4 | LTE B48 | 20 | 56348 | 3660.8 | 4x4 | LTE B48 | 20 | 56096 | 3635.6 | 4x4 | LTE B48 | 20 | 55340 | 3560 | 4x4 | 22.67 | 22.74 |
| CA_{48C}-48D | LTE B48 | 10 | 56690 | 3695 | QPSK | 25 | 12 | 56690 | 3695 | 4x4 | LTE B48 | 20 | 56546 | 3680.6 | 4x4 | LTE B48 | 20 | 55340 | 3560 | 2x2 | LTE B48 | 20 | 55538 | 3579.8 | 2x2 | LTE B48 | 20 | 55736 | 3599.6 | 2x2 | 22.85 | 22.74 |
| CA_48D-{48C} | LTE B48 | 10 | 56690 | 3695 | QPSK | 25 | 12 | 56690 | 3695 | 2x2 | LTE B48 | 20 | 56546 | 3680.6 | 2x2 | LTE B48 | 20 | 56348 | 3660.8 | 2x2 | LTE B48 | 20 | 55340 | 3560 | 4x4 | LTE B48 | 20 | 55538 | 3579.8 | 4x4 | 22.81 | 22.74 |
| CA_48C-{48D} | LTE B48 | 10 | 56690 | 3695 | QPSK | 25 | 12 | 56690 | 3695 | 2x2 | LTE B48 | 20 | 56546 | 3680.6 | 2x2 | LTE B48 | 20 | 55340 | 3560 | 4x4 | LTE B48 | 20 | 55538 | 3579.8 | 4x4 | LTE B48 | 20 | 55736 | 3599.6 | 4x4 | 22.82 | 22.74 |
| CA_{48D}-48C | LTE B48 | 10 | 56690 | 3695 | QPSK | 25 | 12 | 56690 | 3695 | 4x4 | LTE B48 | 20 | 56546 | 3680.6 | 4x4 | LTE B48 | 20 | 56348 | 3660.8 | 4x4 | LTE B48 | 20 | 55340 | 3560 | 2x2 | LTE B48 | 20 | 55538 | 3579.8 | 2x2 | 22.86 | 22.74 |
| CA_{48C}-{48D} | LTE B48 | 10 | 56690 | 3695 | QPSK | 25 | 12 | 56690 | 3695 | 4x4 | LTE B48 | 20 | 56546 | 3680.6 | 4x4 | LTE B48 | 20 | 55340 | 3560 | 4x4 | LTE B48 | 20 | 55538 | 3579.8 | 4x4 | LTE B48 | 20 | 55736 | 3599.6 | 4x4 | 22.81 | 22.74 |
| CA_{48D}-{48C} | LTE B48 | 10 | 56690 | 3695 | QPSK | 25 | 12 | 56690 | 3695 | 4x4 | LTE B48 | 20 | 56546 | 3680.6 | 4x4 | LTE B48 | 20 | 56348 | 3660.8 | 4x4 | LTE B48 | 20 | 55340 | 3560 | 4x4 | LTE B48 | 20 | 55538 | 3579.8 | 4x4 | 22.69 | 22.74 |
| CA_{48F} | LTE B48 | 10 | 56690 | 3695 | QPSK | 25 | 12 | 56690 | 3695 | 4x4 | LTE B48 | 20 | 56546 | 3680.6 | 4x4 | LTE B48 | 20 | 56348 | 3660.8 | 4x4 | LTE B48 | 20 | 56150 | 3641 | 4x4 | LTE B48 | 20 | 55952 | 3621.2 | 4x4 | 22.70 | 22.74 |

## 1.5 Downlink Carrier Aggregation with Uplink Carrier Aggregation enabled

This device supports uplink carrier aggregation (ULCA) with additional Carrier Aggregation configurations active in the downlink. Power measurements were performed with ULCA active and additional CA configurations active in the downlink for the configuration per Fall 2017 TCB Workshop Notes.

Per FCC Guidance, additional SAR measurements for these configurations were not required since their maximum output power was not more than 0.25 dB higher than the maximum output power for with only ULCA active.

### 1.5.1 DL Carrier Aggregation RF Conducted Powers

**Table 24**
**Maximum Output Powers**

| | PCC | | | | | | | | | SCC 1 | | | | | | | | | SCC 2 | | | | SCC 3 | | | | SCC 4 | | | | Power | |
|---|---|---|---|---|---|---|---|---|---|---|---|---|---|---|---|---|---|---|---|---|---|---|---|---|---|---|---|---|---|---|---|---|
| Combination | PCC Band | PCC BW [MHz] | PCC (UL) Ch. | PCC (UL) Freq. [MHz] | Mod. | PCC UL# RB | PCC UL RB Offset | PCC (DL) Channel | PCC (DL) Freq. [MHz] | SCC Band | SCC BW [MHz] | SCC (UL) Ch. | SCC (UL) Freq. [MHz] | Mod. | SCC UL# RB | SCC UL RB Offset | SCC (DL) Channel | SCC (DL) Freq. [MHz] | SCC Band | SCC BW [MHz] | SCC (DL) Channel | SCC (DL) Freq. [MHz] | SCC Band | SCC BW [MHz] | SCC (DL) Channel | SCC (DL) Freq. [MHz] | SCC Band | SCC BW [MHz] | SCC (DL) Channel | SCC (DL) Freq. [MHz] | ULCA Tx.Power with add'l CA config. active (dBm) | ULCA Tx Power (dBm) |
| CA_41C-41A | LTE B41 | 20 | 40620 | 2593 | QPSK | 1 | 99 | 40620 | 2593 | LTE B41 | 20 | 40818 | 2612.8 | QPSK | 1 | 0 | 40818 | 2612.8 | LTE B41 | 20 | 41490 | 2680 | - | - | - | - | - | - | - | - | 24.61 | 24.99 |
| CA_41D | LTE B41 | 20 | 40620 | 2593 | QPSK | 1 | 99 | 40620 | 2593 | LTE B41 | 20 | 40818 | 2612.8 | QPSK | 1 | 0 | 40818 | 2612.8 | LTE B41 | 20 | 40422 | 2573.2 | - | - | - | - | - | - | - | - | 24.96 | 24.99 |
| CA_41D-41A | LTE B41 | 20 | 40620 | 2593 | QPSK | 1 | 99 | 40620 | 2593 | LTE B41 | 20 | 40818 | 2612.8 | QPSK | 1 | 0 | 40818 | 2612.8 | LTE B41 | 20 | 40422 | 2573.2 | LTE B41 | 20 | 41490 | 2680 | - | - | - | - | 24.98 | 24.99 |
| CA_41C-41C | LTE B41 | 20 | 40620 | 2593 | QPSK | 1 | 99 | 40620 | 2593 | LTE B41 | 20 | 40818 | 2612.8 | QPSK | 1 | 0 | 40818 | 2612.8 | LTE B41 | 20 | 41292 | 2660.2 | LTE B41 | 20 | 41490 | 2680 | - | - | - | - | 24.82 | 24.99 |
| CA_41E | LTE B41 | 20 | 40620 | 2593 | QPSK | 1 | 99 | 40620 | 2593 | LTE B41 | 20 | 40818 | 2612.8 | QPSK | 1 | 0 | 40818 | 2612.8 | LTE B41 | 20 | 40422 | 2573.2 | LTE B41 | 20 | 40224 | 2553.4 | - | - | - | - | 24.90 | 24.99 |
| CA_41C-41D | LTE B41 | 20 | 40620 | 2593 | QPSK | 1 | 99 | 40620 | 2593 | LTE B41 | 20 | 40818 | 2612.8 | QPSK | 1 | 0 | 40818 | 2612.8 | LTE B41 | 20 | 41094 | 2640.4 | LTE B41 | 20 | 41292 | 2660.2 | LTE B41 | 20 | 41490 | 2680 | 24.89 | 24.99 |
| CA_41D-41C | LTE B41 | 20 | 40620 | 2593 | QPSK | 1 | 99 | 40620 | 2593 | LTE B41 | 20 | 40818 | 2612.8 | QPSK | 1 | 0 | 40818 | 2612.8 | LTE B41 | 20 | 40422 | 2573.2 | LTE B41 | 20 | 41292 | 2660.2 | LTE B41 | 20 | 41490 | 2680 | 24.84 | 24.99 |

### 1.5.2 DL Carrier Aggregation with DL 4x4 MIMO RF Conducted Powers

Note: 4x4 DL MIMO is only operating in the downlink. Uplink transmission is limited to a single output stream for each component carrier of ULCA.

**Table 25**
**Maximum Output Powers**

| | PCC | | | | | | | | | SCC 1 | | | | | | | | | SCC 2 | | | | SCC 3 | | | | SCC 4 | | | | Power | |
|---|---|---|---|---|---|---|---|---|---|---|---|---|---|---|---|---|---|---|---|---|---|---|---|---|---|---|---|---|---|---|---|---|
| Combination | PCC Band | PCC BW [MHz] | PCC (UL) Ch. | PCC (UL) Freq. [MHz] | Mod. | PCC UL# RB | PCC UL RB Offset | PCC (DL) Ch. | PCC (DL) Freq. [MHz] | DL Ant. Config. | SCC Band | SCC BW [MHz] | SCC (UL) Ch. | SCC (UL) Freq. [MHz] | Mod. | SCC UL# RB | SCC UL RB Offset | SCC (DL) Ch. | SCC (DL) Freq. [MHz] | DL Ant. Config. | SCC Band | SCC BW [MHz] | SCC (DL) Ch. | SCC (DL) Freq. [MHz] | DL Ant. Config. | SCC Band | SCC BW [MHz] | SCC (DL) Ch. | SCC (DL) Freq. [MHz] | DL Ant. Config. | ULCA Tx.Power with add'l CA config. | ULCA Tx Power (dBm) |
| CA_[41C] | LTE B41 | 20 | 40620 | 2593 | QPSK | 1 | 99 | 40620 | 2593 | 4x4 | LTE B41 | 20 | 40818 | 2612.8 | QPSK | 1 | 0 | 40818 | 2612.8 | 4x4 | - | - | - | - | - | - | - | - | - | - | 24.99 | 24.99 |
| CA_41C-[41A] | LTE B41 | 20 | 40620 | 2593 | QPSK | 1 | 99 | 40620 | 2593 | 2x2 | LTE B41 | 20 | 40818 | 2612.8 | QPSK | 1 | 0 | 40818 | 2612.8 | 2x2 | LTE B41 | 20 | 41490 | 2680 | 4x4 | - | - | - | - | - | 24.90 | 24.99 |
| CA_[41C]-41A | LTE B41 | 20 | 40620 | 2593 | QPSK | 1 | 99 | 40620 | 2593 | 2x2 | LTE B41 | 20 | 40818 | 2612.8 | QPSK | 1 | 0 | 40818 | 2612.8 | 2x2 | LTE B41 | 20 | 41490 | 2680 | 2x2 | - | - | - | - | - | 24.96 | 24.99 |
| CA_[41C]-[41A] | LTE B41 | 20 | 40620 | 2593 | QPSK | 1 | 99 | 40620 | 2593 | 4x4 | LTE B41 | 20 | 40818 | 2612.8 | QPSK | 1 | 0 | 40818 | 2612.8 | 4x4 | LTE B41 | 20 | 41490 | 2680 | 4x4 | - | - | - | - | - | 24.89 | 24.99 |
| CA_[41C]-41D | LTE B41 | 20 | 40620 | 2593 | QPSK | 1 | 99 | 40620 | 2593 | 4x4 | LTE B41 | 20 | 40818 | 2612.8 | QPSK | 1 | 0 | 40818 | 2612.8 | 4x4 | LTE B41 | 20 | 40422 | 2573.2 | 4x4 | - | - | - | - | - | 24.95 | 24.99 |
| CA_41D-[41A] | LTE B41 | 20 | 40620 | 2593 | QPSK | 1 | 99 | 40620 | 2593 | 2x2 | LTE B41 | 20 | 40818 | 2612.8 | QPSK | 1 | 99 | 41292 | 2660.2 | 2x2 | LTE B41 | 20 | 40422 | 2573.2 | 2x2 | LTE B41 | 20 | 41490 | 2680 | 4x4 | - | - | - | - | - | 24.71 | 24.99 |
| CA_[41D]-41A | LTE B41 | 20 | 40620 | 2593 | QPSK | 1 | 99 | 40620 | 2593 | 4x4 | LTE B41 | 20 | 40818 | 2612.8 | QPSK | 1 | 99 | 41292 | 2660.2 | 4x4 | LTE B41 | 20 | 40422 | 2573.2 | 4x4 | LTE B41 | 20 | 41490 | 2680 | 2x2 | - | - | - | - | - | 24.96 | 24.99 |
| CA_[41D]-[41A] | LTE B41 | 20 | 40620 | 2593 | QPSK | 1 | 99 | 40620 | 2593 | 4x4 | LTE B41 | 20 | 40818 | 2612.8 | QPSK | 1 | 99 | 41292 | 2660.2 | 4x4 | LTE B41 | 20 | 40422 | 2573.2 | 4x4 | LTE B41 | 20 | 41490 | 2680 | 4x4 | - | - | - | - | - | 24.98 | 24.99 |
| CA_[41C]-41C | LTE B41 | 20 | 40620 | 2593 | QPSK | 1 | 99 | 40620 | 2593 | 4x4 | LTE B41 | 20 | 40818 | 2612.8 | QPSK | 1 | 99 | 41292 | 2660.2 | 4x4 | LTE B41 | 20 | 41292 | 2660.2 | 2x2 | LTE B41 | 20 | 41490 | 2680 | 2x2 | - | - | - | - | - | 24.81 | 24.99 |
| CA_41C-[41C] | LTE B41 | 20 | 40620 | 2593 | QPSK | 1 | 99 | 40620 | 2593 | 2x2 | LTE B41 | 20 | 40818 | 2612.8 | QPSK | 1 | 99 | 41292 | 2660.2 | 2x2 | LTE B41 | 20 | 41292 | 2660.2 | 4x4 | LTE B41 | 20 | 41490 | 2680 | 4x4 | - | - | - | - | - | 24.73 | 24.99 |
| CA_[41C]-[41C] | LTE B41 | 20 | 40620 | 2593 | QPSK | 1 | 99 | 40620 | 2593 | 4x4 | LTE B41 | 20 | 40818 | 2612.8 | QPSK | 1 | 99 | 41292 | 2660.2 | 4x4 | LTE B41 | 20 | 41292 | 2660.2 | 4x4 | LTE B41 | 20 | 41490 | 2680 | 4x4 | - | - | - | - | - | 24.86 | 24.99 |
| CA_[41E] | LTE B41 | 20 | 40620 | 2593 | QPSK | 1 | 99 | 40620 | 2593 | 4x4 | LTE B41 | 20 | 40818 | 2612.8 | QPSK | 1 | 99 | 41292 | 2660.2 | 4x4 | LTE B41 | 20 | 40422 | 2573.2 | 4x4 | LTE B41 | 20 | 40224 | 2553.4 | 4x4 | - | - | - | - | - | 24.91 | 24.99 |
| CA_[41C]-41D | LTE B41 | 20 | 40620 | 2593 | QPSK | 1 | 99 | 40620 | 2593 | 4x4 | LTE B41 | 20 | 40818 | 2612.8 | QPSK | 1 | 0 | 40818 | 2612.8 | 4x4 | LTE B41 | 20 | 41094 | 2640.4 | 2x2 | LTE B41 | 20 | 41292 | 2660.2 | 2x2 | LTE B41 | 20 | 41490 | 2680 | 2x2 | 24.79 | 24.99 |
| CA_41D-[41C] | LTE B41 | 20 | 40620 | 2593 | QPSK | 1 | 99 | 40620 | 2593 | 2x2 | LTE B41 | 20 | 40818 | 2612.8 | QPSK | 1 | 0 | 40818 | 2612.8 | 2x2 | LTE B41 | 20 | 40422 | 2573.2 | 2x2 | LTE B41 | 20 | 41292 | 2660.2 | 4x4 | LTE B41 | 20 | 41490 | 2680 | 4x4 | 24.86 | 24.99 |
| CA_41C-[41D] | LTE B41 | 20 | 40620 | 2593 | QPSK | 1 | 99 | 40620 | 2593 | 2x2 | LTE B41 | 20 | 40818 | 2612.8 | QPSK | 1 | 0 | 40818 | 2612.8 | 2x2 | LTE B41 | 20 | 41094 | 2640.4 | 4x4 | LTE B41 | 20 | 41292 | 2660.2 | 4x4 | LTE B41 | 20 | 41490 | 2680 | 4x4 | 24.78 | 24.99 |
| CA_[41D]-41C | LTE B41 | 20 | 40620 | 2593 | QPSK | 1 | 99 | 40620 | 2593 | 4x4 | LTE B41 | 20 | 40818 | 2612.8 | QPSK | 1 | 0 | 40818 | 2612.8 | 4x4 | LTE B41 | 20 | 40422 | 2573.2 | 4x4 | LTE B41 | 20 | 41292 | 2660.2 | 2x2 | LTE B41 | 20 | 41490 | 2680 | 2x2 | 24.75 | 24.99 |
| CA_[41C]-[41D] | LTE B41 | 20 | 40620 | 2593 | QPSK | 1 | 99 | 40620 | 2593 | 4x4 | LTE B41 | 20 | 40818 | 2612.8 | QPSK | 1 | 0 | 40818 | 2612.8 | 4x4 | LTE B41 | 20 | 41094 | 2640.4 | 4x4 | LTE B41 | 20 | 41292 | 2660.2 | 4x4 | LTE B41 | 20 | 41490 | 2680 | 4x4 | 24.76 | 24.99 |
| CA_[41D]-[41C] | LTE B41 | 20 | 40620 | 2593 | QPSK | 1 | 99 | 40620 | 2593 | 4x4 | LTE B41 | 20 | 40818 | 2612.8 | QPSK | 1 | 0 | 40818 | 2612.8 | 4x4 | LTE B41 | 20 | 40422 | 2573.2 | 4x4 | LTE B41 | 20 | 41292 | 2660.2 | 4x4 | LTE B41 | 20 | 41490 | 2680 | 4x4 | 24.74 | 24.99 |

| | PCC | | | | | | | | | | SCC 1 | | | | | | | | | Power | |
|---|---|---|---|---|---|---|---|---|---|---|---|---|---|---|---|---|---|---|---|---|---|
| Combination | PCC Band | PCC Bandwidth [MHz] | PCC (UL) Channel | PCC (UL) Frequency [MHz] | Modulation | PCC UL# RB | PCC UL RB Offset | PCC (DL) Channel | PCC (DL) Frequency [MHz] | DL Ant. Config. | SCC Band | SCC Bandwidth [MHz] | PCC (UL) Channel | PCC (UL) Frequency [MHz] | Modulation | PCC UL# RB | PCC UL RB Offset | SCC (DL) Channel | SCC (DL) Frequency [MHz] | DL Ant. Config. | ULCA Tx.Power with add'l CA config. active on DL (dBm) | LTE Single Carrier Tx Power (dBm) |
| CA_[66B] | LTE B66 | 10 | 132322 | 1745 | QPSK | 1 | 49 | 66786 | 2145 | 4x4 | LTE B66 | 10 | 132223 | 1735.1 | QPSK | 1 | 49 | 66687 | 2135.1 | 4x4 | 24.20 | 24.20 |
| CA_[66C] | LTE B66 | 20 | 132322 | 1745 | QPSK | 1 | 0 | 66786 | 2145 | 4x4 | LTE B66 | 20 | 132124 | 1725.2 | QPSK | 1 | 99 | 66588 | 2125.2 | 4x4 | 24.50 | 24.50 |

| | PCC | | | | | | | | | | SCC | | | | | | | | | Power | |
|---|---|---|---|---|---|---|---|---|---|---|---|---|---|---|---|---|---|---|---|---|---|
| Combination | PCC Band | PCC Bandwidth [MHz] | PCC (UL) Channel | PCC (UL) Frequency [MHz] | Modulation | PCC UL# RB | PCC UL RB Offset | PCC (DL) Channel | PCC (DL) Frequency [MHz] | DL Ant. Config. | SCC Band | SCC Bandwidth [MHz] | SCC (UL) Channel | SCC (UL) Frequency [MHz] | Modulation | PCC UL# RB | PCC UL RB Offset | PCC (DL) Ch. | PCC (DL) Freq. [MHz] | DL Ant. Config. | ULCA Tx.Power with add'l CA config. active on DL (dBm) | LTE Single Carrier Tx Power (dBm) |
| CA_[41C] | LTE B41 | 20 | 40620 | 2593 | QPSK | 1 | 99 | 40620 | 2593 | 4x4 | LTE B41 | 20 | 40818 | 2612.8 | QPSK | 1 | 0 | 40818 | 2612.8 | 4x4 | 24.99 | 24.99 |
| CA_[48C] | LTE B48 | 20 | 56640 | 3690 | QPSK | 50 | 0 | 56640 | 3690 | 4x4 | LTE B48 | 20 | 56442 | 3670.2 | QPSK | 1 | 0 | 56442 | 3670.2 | 4x4 | 22.38 | 22.38 |



© 2020 PCTEST