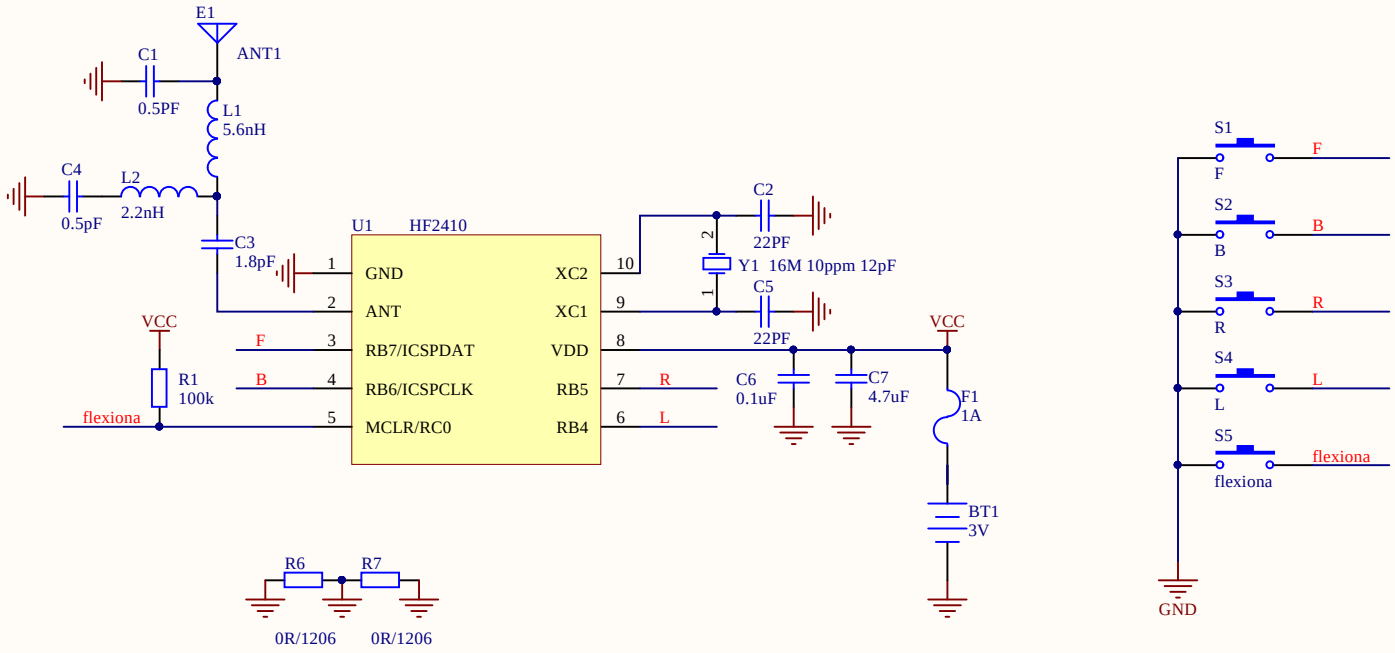

Eealy light industrial Co.Ltd			
Title: Defend Batmobile RC TX			
	Model NO. 92300	**Drawing By:** XiaohongTang	**Date:** 2020/03/05
		Checked By:	**Date:**
	Rev:02	**Sheet** 2 **of** 3	**Size** A4