DRAWING #	SHEET	REV
214388	1	A

REVISIONS

ZONE	REV	DESCRIPTION	DATE	APPROVED
	A	PROD REL PER ECO 6952 AF	11-13-98	
	X1			

NOTES: (UNLESS OTHERWISE SPECIFIED)

1. THIS DOCUMENT IS COMPUTER GENERATED. REVISIONS MUST UPDATE DATA BASE.
2. ~~INSTALL BUILD (PART OF ITEM 1) INTO SOCKET AREA~~ OF HOUSING (ITEM 3)
3. REMOVE RELEASE PAPER FROM LENS (ITEM 3) BEFORE INSTALLING
4. ATTACH MYLAR (ITEM 14) TO ADHESIVE SIDE OF FACE PLATE (ITEM 4) DIRECTLY OVER THE 2 HOLES.
5. ADD KIV (ITEM 13) TO GAP BETWEEN LENS (ITEM 3) AND HOUSING (ITEM 3).

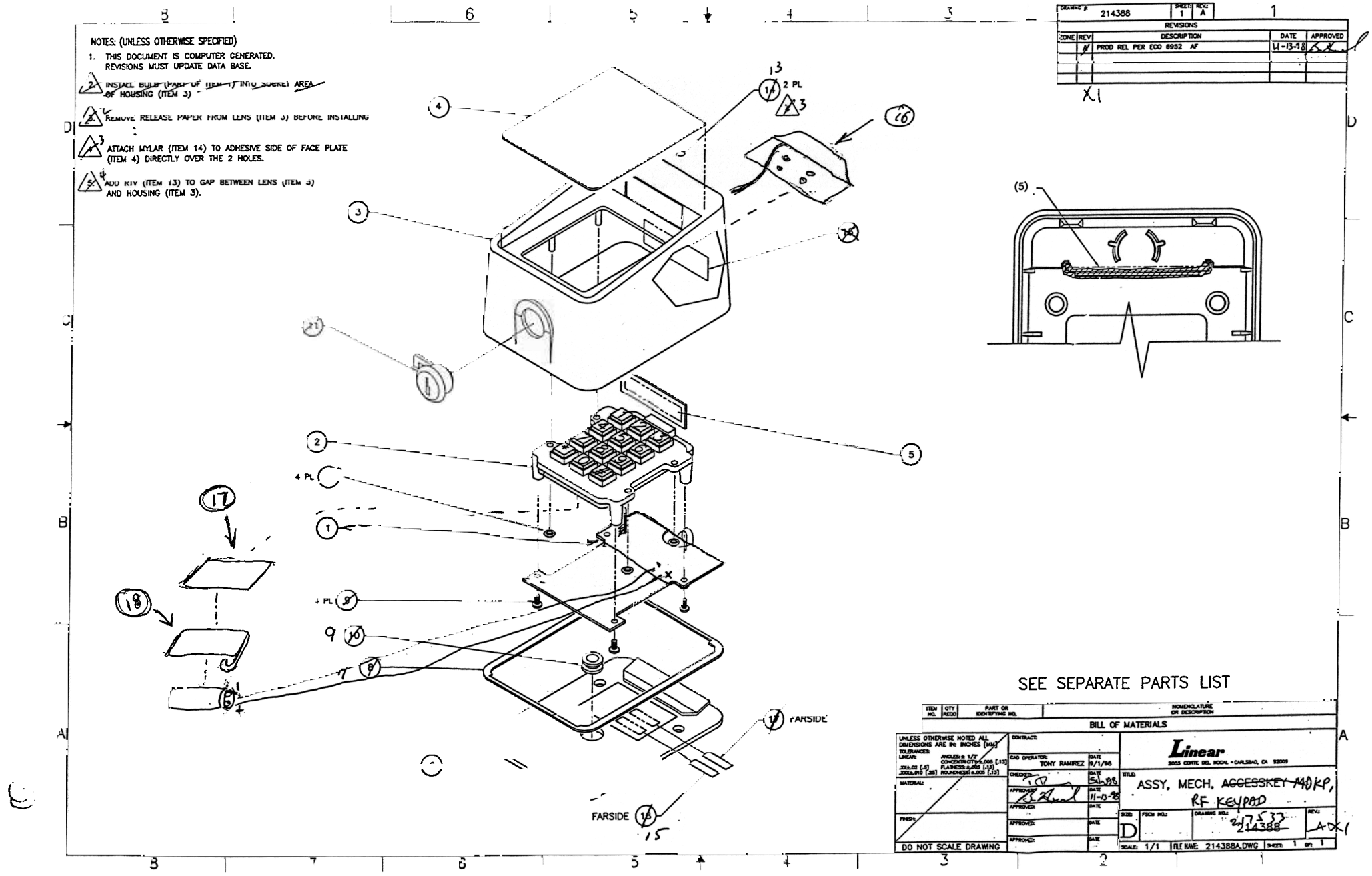

SEE SEPARATE PARTS LIST

ITEM NO.	QTY REQD	PART OR IDENTIFYING NO.	NOMENCLATURE OR DESCRIPTION

BILL OF MATERIALS

UNLESS OTHERWISE NOTED ALL DIMENSIONS ARE IN: INCHES [MM]
TOLERANCES: LINEAR: .XX±.02 [.5] .XXX±.010 [.25]; ANGLES: ± 1/2°; CONCENTRICITY: ±.005 [.13]; FLATNESS: ±.005 [.13]; ROUNDNESS: ±.005 [.13]

MATERIAL:

FINISH:

DO NOT SCALE DRAWING

CONTRACT:

CAD OPERATOR: TONY RAMIREZ — DATE 9/1/96

CHECKED: — DATE 11-13-98

APPROVED: — DATE 11-13-98

APPROVED: — DATE

APPROVED: — DATE

APPROVED: — DATE

Linear
2055 CORTE DEL NOGAL • CARLSBAD, CA 92009

TITLE: ASSY, MECH, ~~ACCESSKEY~~ ~~140~~ KP, RF KEYPAD

SIZE: D — FSCM NO.: — DRAWING NO.: ~~214388~~ 217533 — REV: A X1

SCALE: 1/1 — FILE NAME: 214388A.DWG — SHEET: 1 OF: 1

LINEAR CORPORATION
FCC ID: EF4 ACP00878