33.0000
22.0000
Ø83.6197

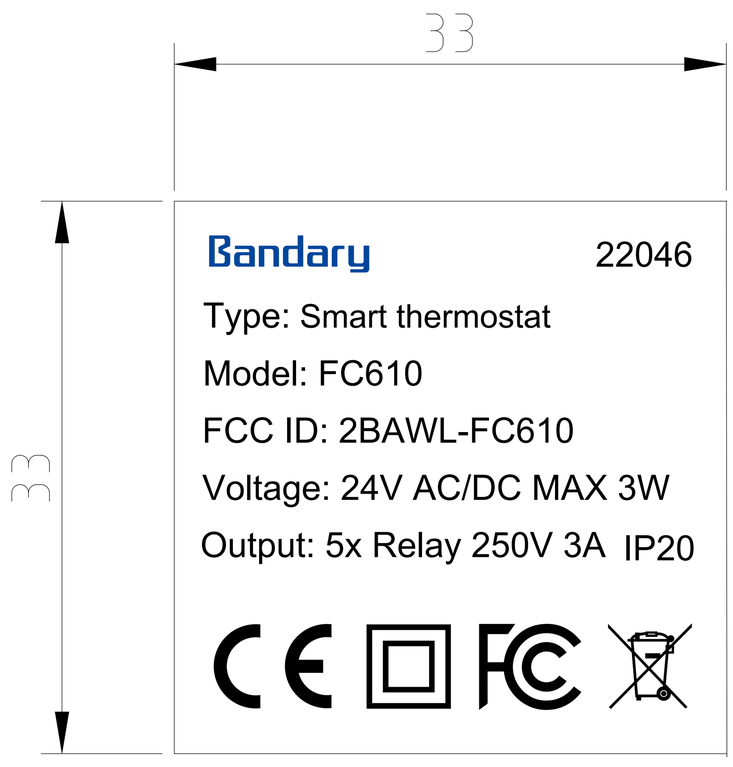
33
33
Bandary
22046
Type: Smart thermostat
Model: FC610
FCC ID: 2BAWL-FC610
Voltage: 24V AC/DC MAX 3W
Output: 5x Relay 250V 3A IP20

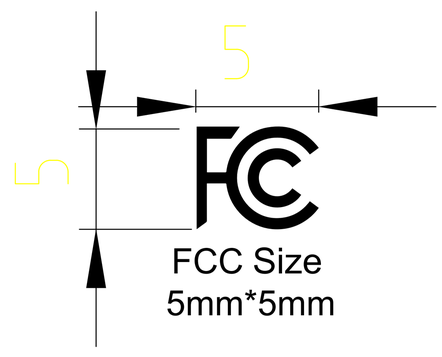
5
5
FCC Size
5mm*5mm

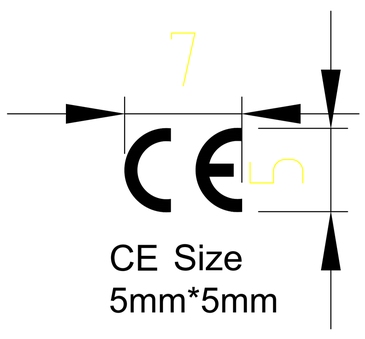
7
5
CE Size
5mm*5mm

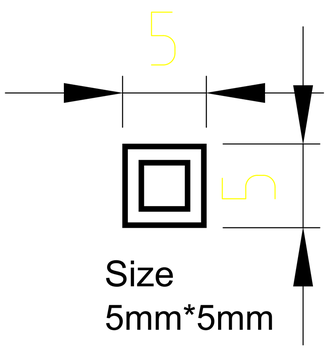
5
5
Size
5mm*5mm

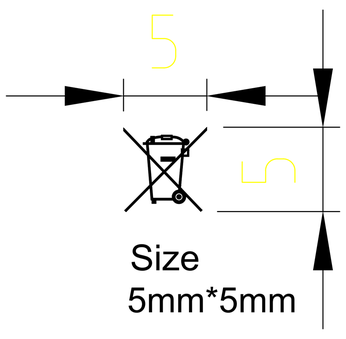
5
5
Size
5mm*5mm