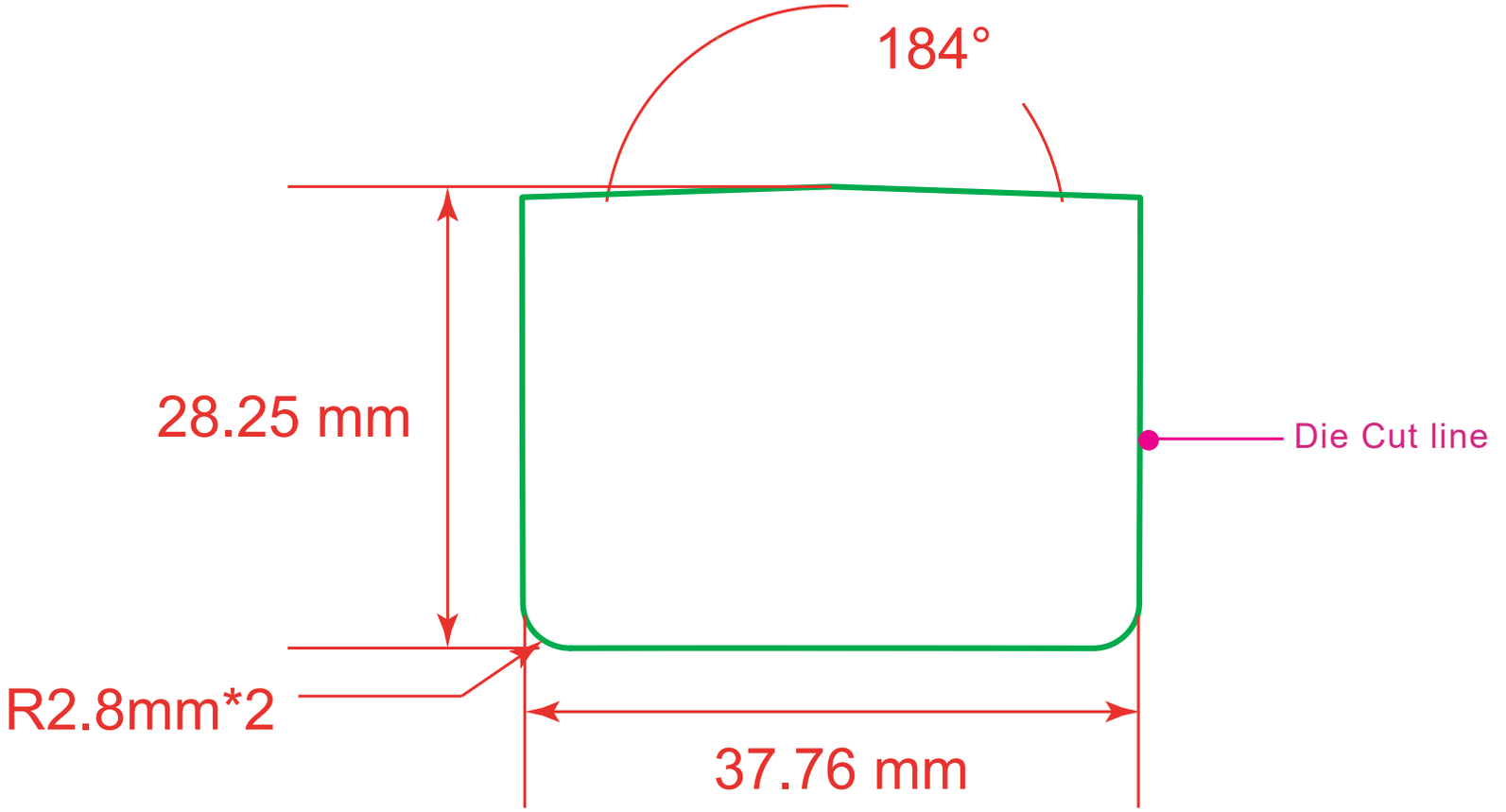
184°
28.25 mm
Die Cut line
R2.8mm*2
37.76 mm

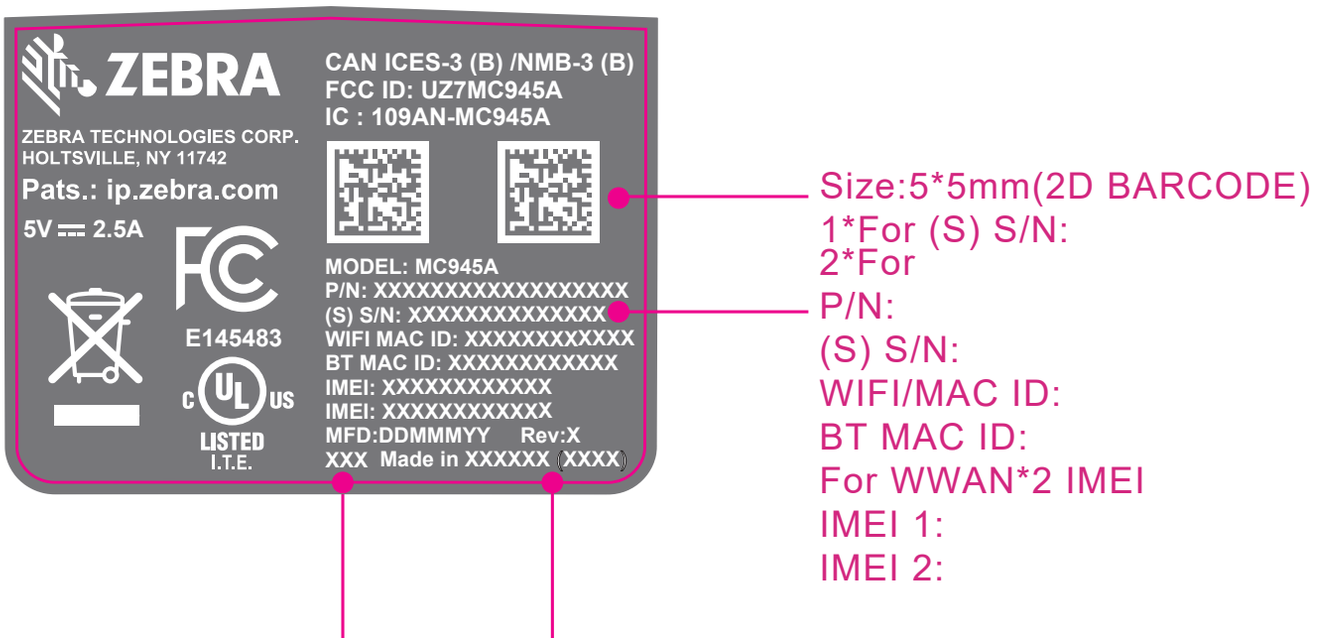
ZEBRA
ZEBRA TECHNOLOGIES CORP.
HOLTSVILLE, NY 11742
Pats.: ip.zebra.com
5V ⎓ 2.5A
E145483
LISTED
I.T.E.
CAN ICES-3 (B) /NMB-3 (B)
FCC ID: UZ7MC945A
IC : 109AN-MC945A
MODEL: MC945A
P/N: XXXXXXXXXXXXXXXXXX
(S) S/N: XXXXXXXXXXXXXX
WIFI MAC ID: XXXXXXXXXXXX
BT MAC ID: XXXXXXXXXXXX
IMEI: XXXXXXXXXXXX
IMEI: XXXXXXXXXXXX
MFD:DDMMMYY Rev:X
XXX Made in XXXXXX (XXXX)
Size:5*5mm(2D BARCODE)
1*For (S) S/N:
2*For
P/N:
(S) S/N:
WIFI/MAC ID:
BT MAC ID:
For WWAN*2 IMEI
IMEI 1:
IMEI 2: