REVISIONS			
REV	DESCRIPTION	APPD	DATE
X	PRODUCTION RELEASE PER ECO #		

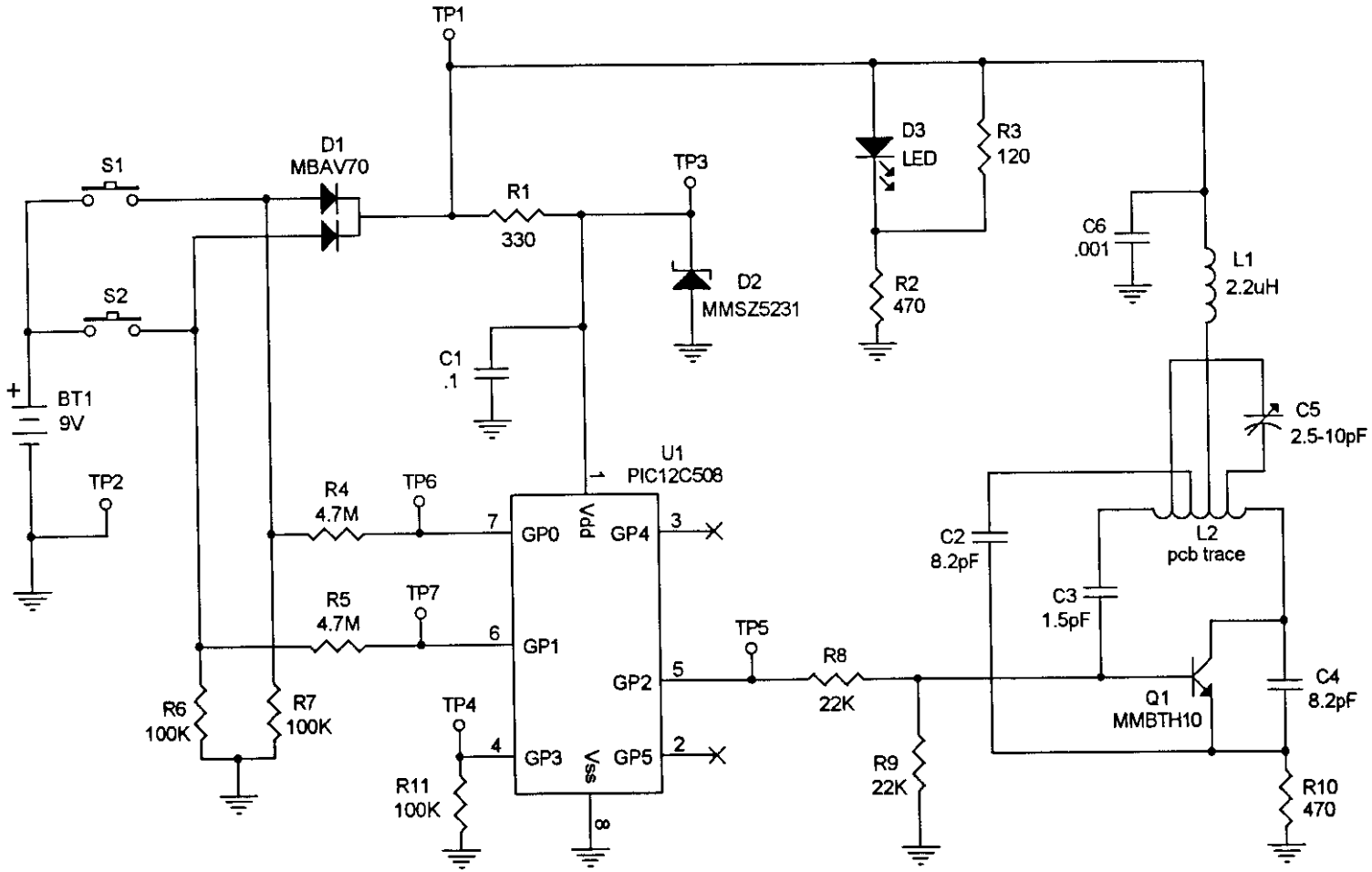

APPROVALS		
DRAWN	B. NYHUS	8JUL98
ENGINEER		
CHECKED		

LINEAR CORPORATION

Title: SCHEM, MCT-2

Size: A | Document Number: 214358 | Rev: X1

Date: Wednesday, July 22, 1998 | Sheet 1 of 1

REVISIONS				
ZONE	REV	DESCRIPTION	DATE	APPROVED
	X3			

NOTES: (UNLESS OTHERWISE SPECIFIED)

1. THIS DRAWING IS COMPUTER GENERATED. DATABASE MUST BE UPDATED WHEN REVISED.
2. MARK ASSEMBLY DASH NUMBER AND REVISION LETTER USING .12 [3.2] HIGH CHARACTERS, PERMANENT INK, CONTRASTING COLOR, APPROXIMATELY WHERE SHOWN.
3. PLACE DATE CODE LABEL (ITEM 2) APPROXIMATELY WHERE SHOWN.
4. CLIP LEADS OF S1 AND S2 FLUSH WITH PCB, COMPONENT SIDE.
5. L2 IS A TRACE ON THE PRINTED CIRCUIT BOARD.

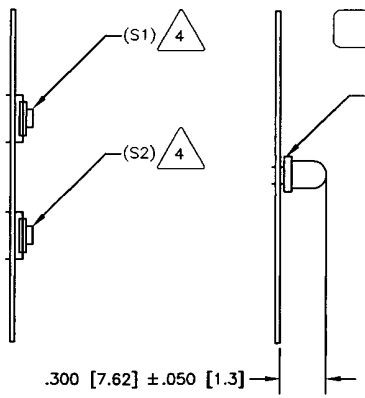

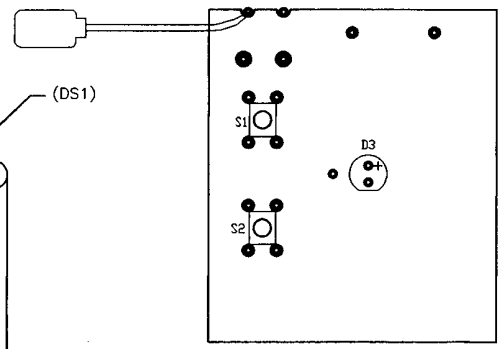

VIEWED FROM CIRCUIT SIDE

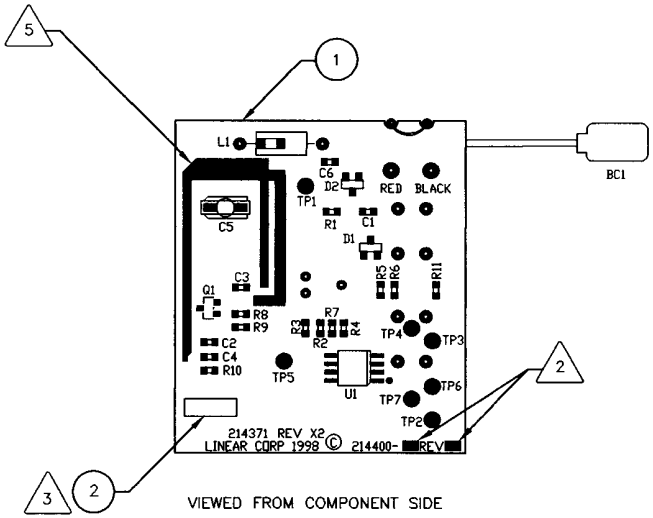

VIEWED FROM COMPONENT SIDE

SEE SEPERATE PARTS LIST

ITEM NO.	QTY REQD	PART OR IDENTIFYING NO.	NOMENCLATURE OR DESCRIPTION

BILL OF MATERIALS

UNLESS OTHERWISE NOTED ALL DIMENSIONS ARE IN: INCHES [MM]
TOLERANCES:
LINEAR:
.X± .1 [.3] ANGLES: ± 0.5°
.XX± .02 [.5] CONCENTRICITY: ± .005[.13]
.XXX± .005[.13] FLATNESS: ± .005[.13]

MATERIAL:

FINISH:

DO NOT SCALE DRAWING

PROJECT: MCT-2		
CAD OPERATOR: K. WARREN	DATE 8/18/97	
CHECKED:	DATE	
APPROVED:	DATE	
APPROVED:	DATE	
APPROVED:	DATE	
APPROVED:	DATE	

Linear
A NORTEK COMPANY
2055 CORTE DEL NOGAL • CARLSBAD, CA 92009

TITLE: ASSEMBLY, PCB, MCT-2

SIZE:	FSCM NO.:	DRAWING NO.:	REV.:
C		214400	X3

SCALE: 2/1 FILE NAME: 214400A.DWG SHEET: 1 OF: 1

DRAWING # 214400 SHEET: 1 REV.: X3