MangOH Red Platform

SHEET 1 TABLE OF CONTENTS

SHEET 2 CF3 SOCKET

SHEET 3 RF, USB, IOT connectors

SHEET 4 RESET, CTRL switch, I2C HUB

SHEET 5 AUDIO (ANALOG & PCM)

SHEET 6 SIM cards, SD card, SDIO mux

SHEET 7 USB HUB, GPIO Expander, FTDI conv

SHEET 8 Battery Charger and USB power

SHEET 9 1V8,3V3,5V0 Power Supply

SHEET 10 WIFI and BT

Project Variants

	1600643		
DNI	N		
MIC_OMTP	N		
MIC_CTIA	Y		

Variants description

DNI = Do Not Install
MIC_OMTP = OMTP headphones config (do not define MIC_CTIA)
MIC_CTIA = CTIA/AHJ headphones config (do not define MIC_OMTP)

I2C address list

08h = 3503 USB hub
3Eh = I/O expander
51h = EEPROM with Board ID
64h = Battery gauge
68h = 6 Axis IMU
6Bh = Buck+batt charger
71h = I2C Hub
76h = Pressure Sensor

REFERENCE

1600674 PCA, MANGOH
5302303 PCB, MANGOH

This document contains information which is proprietary to Sierra Wireless Inc. and is licensed pursuant to Creative Commons Attribution 4.0 International License.

Copyright (C) 2016

SIERRA WIRELESS™

SITE	CTO Office
LEAD ENGINEER	Ashish Syal
REV SCH	50
REV PCB	5
PROJECT	MANGO RED
DATE/TIME	14-09-2017_13:26
SCHEMATIC	2500927
PAGE	1 OF 10

INNER RING

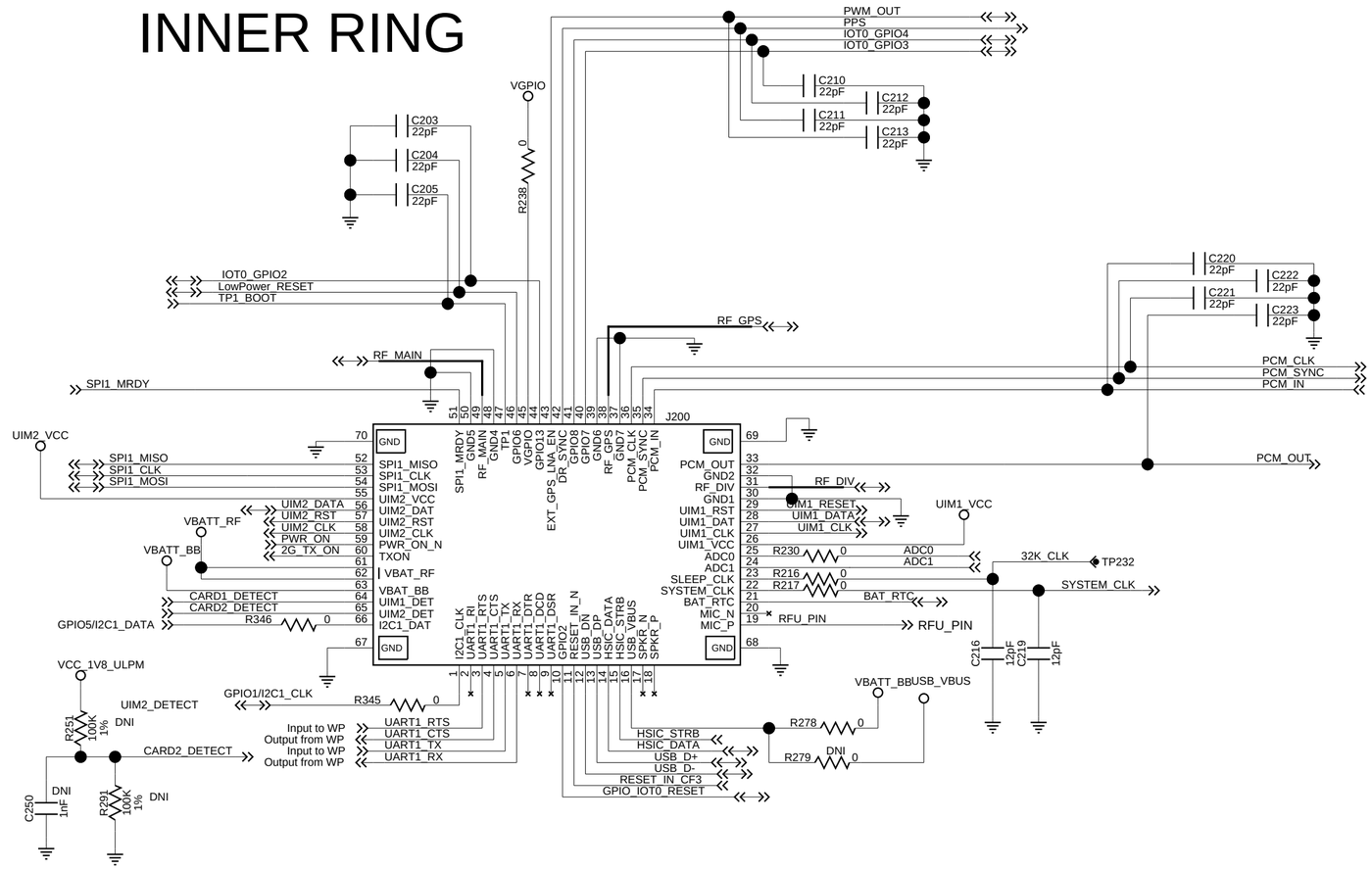

GROUND SLUG

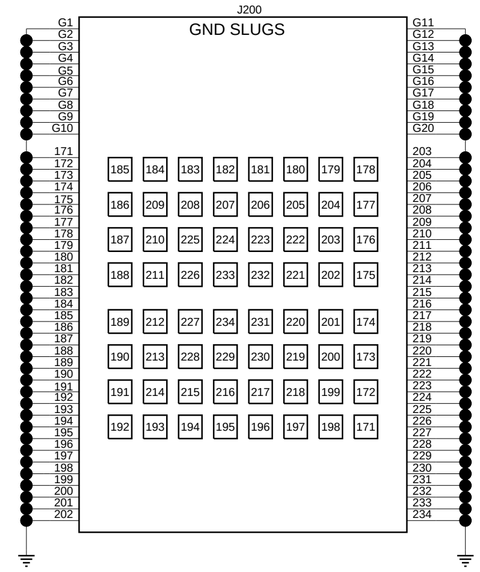

JTAG

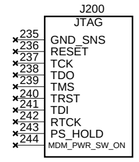

OUTER RING

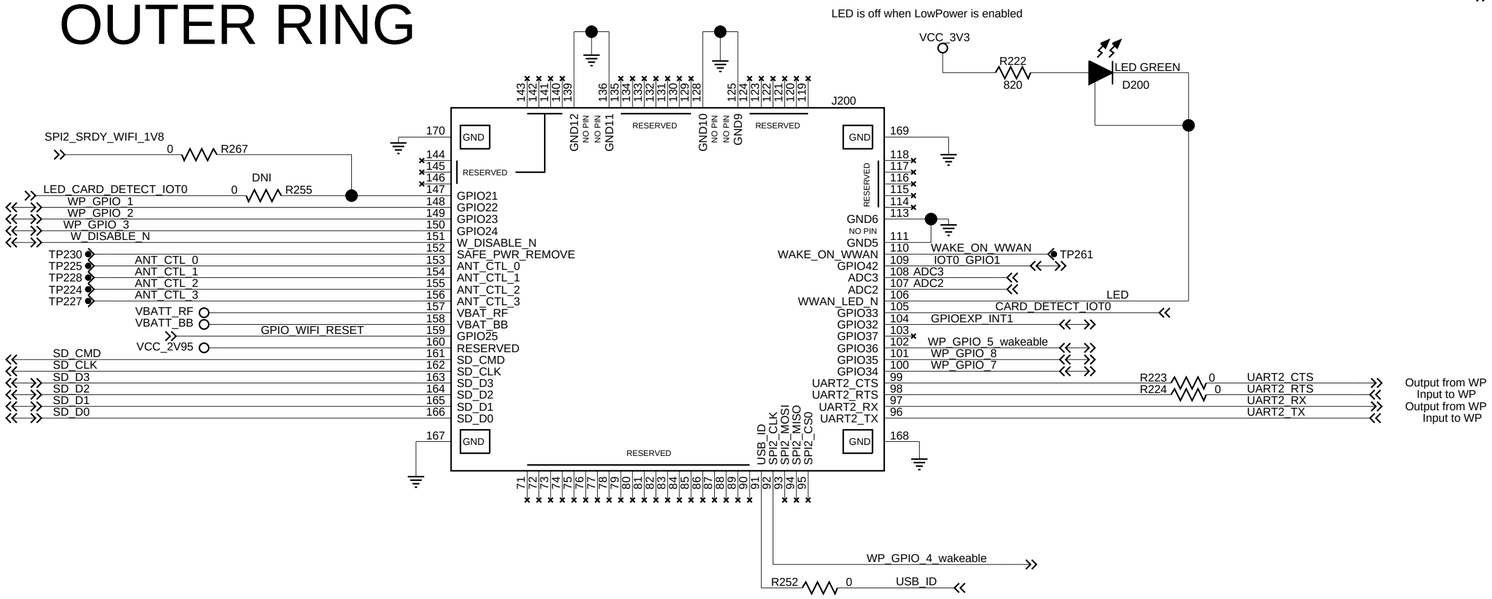

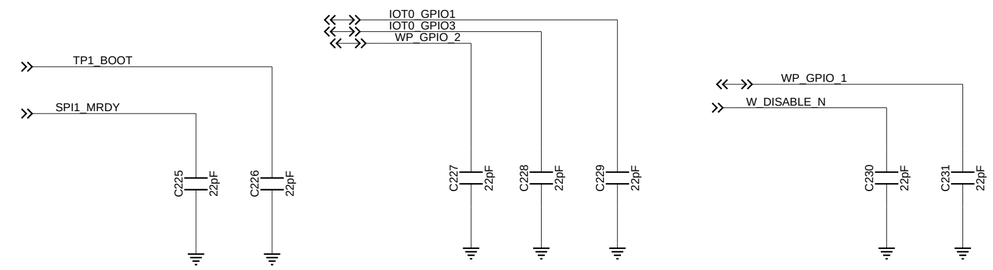

Mounting Holes

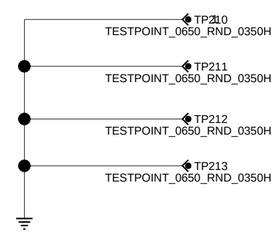

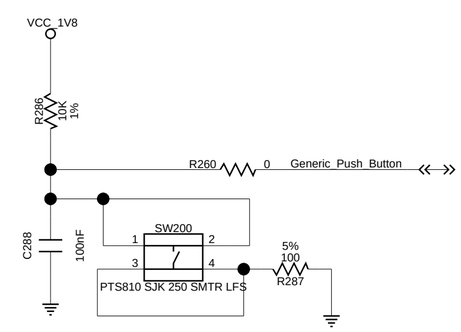

This document contains information which is proprietary to Sierra Wireless Inc. and is licensed pursuant to Creative Commons Attribution 4.0 International License.

Copyright (C) 2016

SIERRA WIRELESS™

SITE	CTO Office
LEAD ENGINEER	Ashish Syal
REV SCH	See P1
REV PCB	See P1
PROJECT	MANGO RED
DATE/TIME	14-09-2017_13:34
SCHEMATIC	2500927
PAGE	2 OF 10

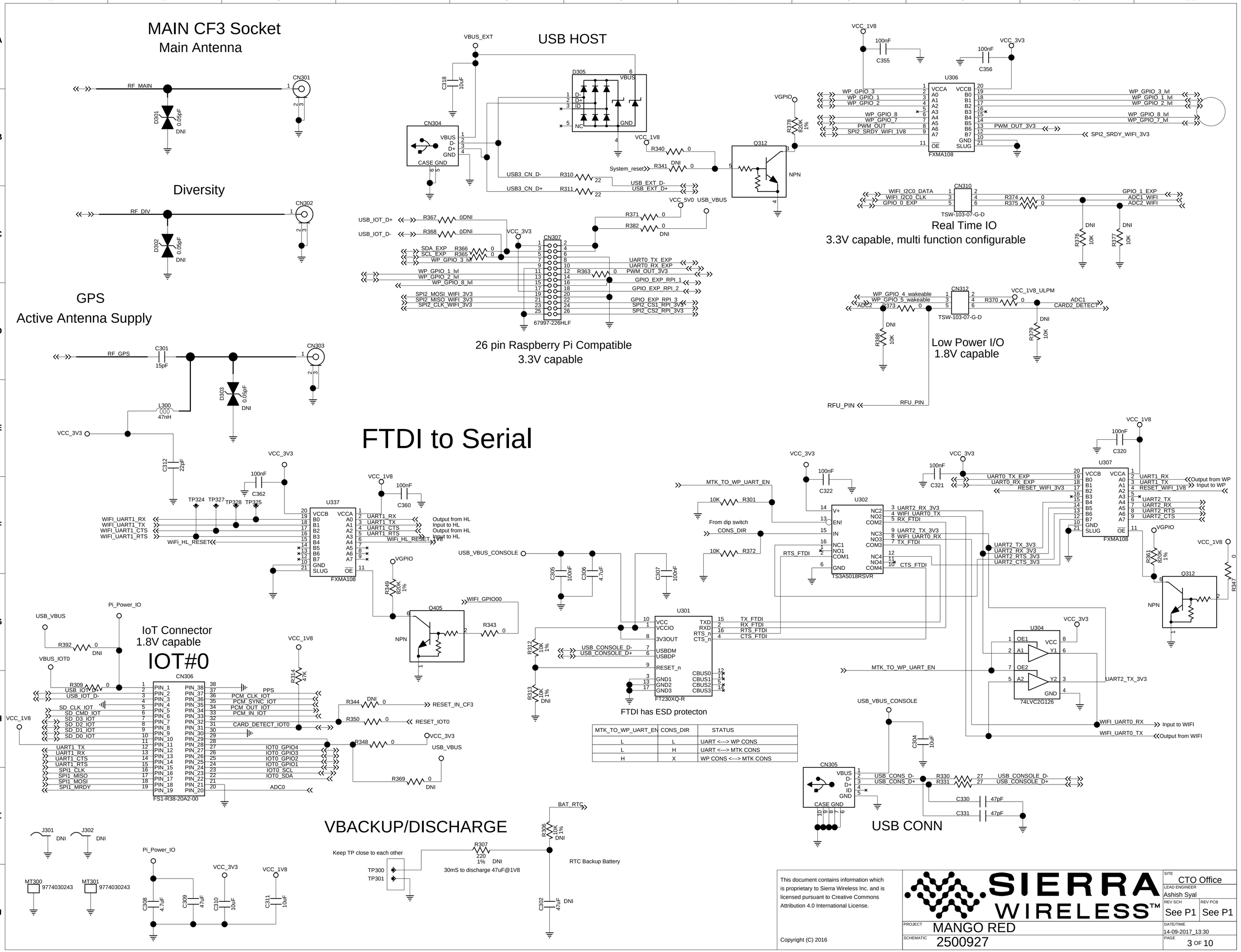

MTK_TO_WP_UART_EN	CONS_DIR	STATUS
L	L	UART <---> WP CONS
L	H	UART <---> MTK CONS
H	X	WP CONS <---> MTK CONS

This document contains information which is proprietary to Sierra Wireless Inc. and is licensed pursuant to Creative Commons Attribution 4.0 International License.

Copyright (C) 2016

SIERRA WIRELESS™

SITE	CTO Office
LEAD ENGINEER	Ashish Syal
REV SCH	See P1
REV PCB	See P1
PROJECT	MANGO RED
DATE/TIME	14-09-2017_13:30
SCHEMATIC	2500927
PAGE	3 OF 10

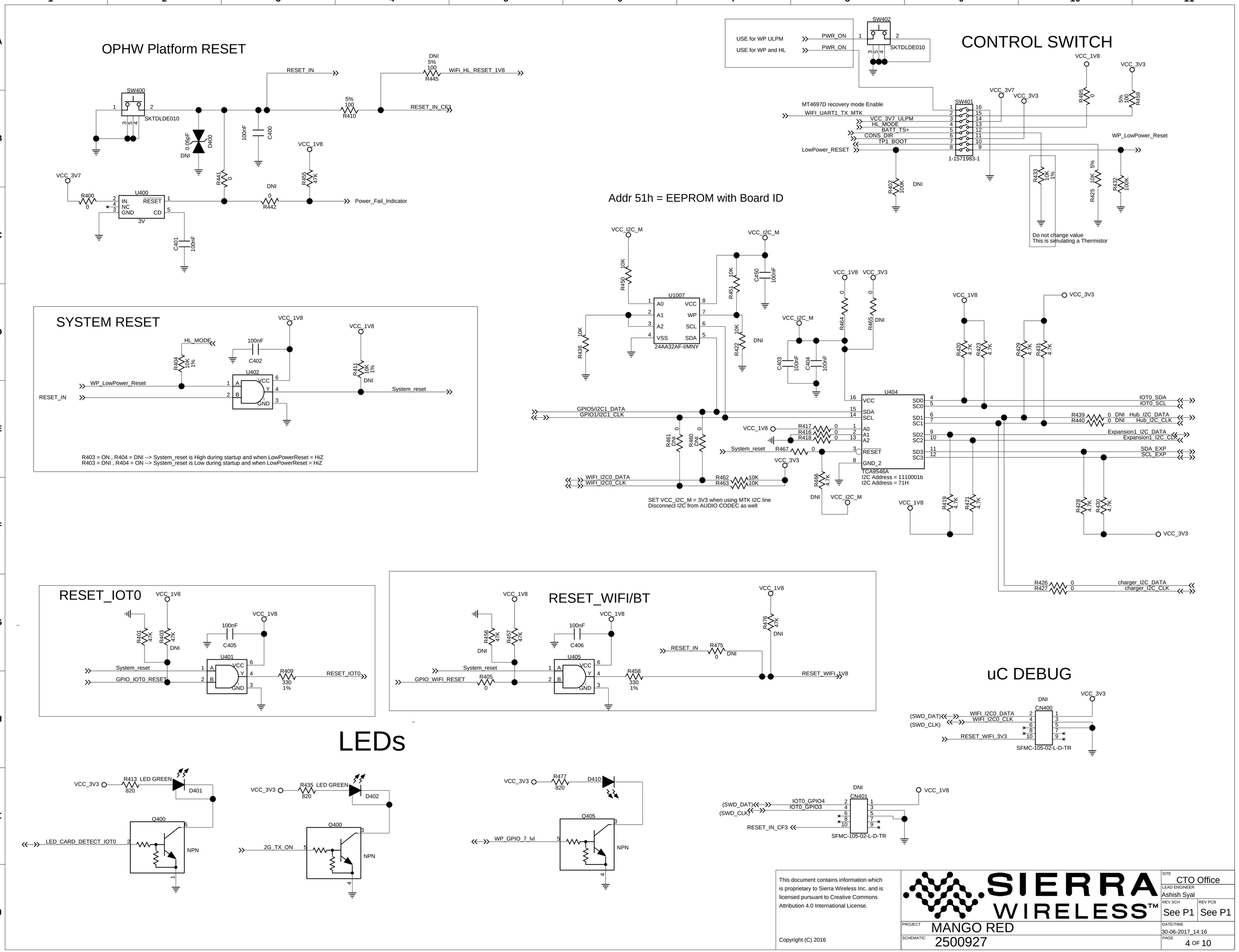

This document contains information which is proprietary to Sierra Wireless Inc. and is licensed pursuant to Creative Commons Attribution 4.0 International License.

Copyright (C) 2016

SIERRA WIRELESS™

SITE	CTO Office
LEAD ENGINEER	Ashish Syal
REV SCH	See P1
REV PCB	See P1
PROJECT	MANGO RED
DATE/TIME	30-06-2017_14:16
SCHEMATIC	2500927
PAGE	4 OF 10

Audio Source Selection

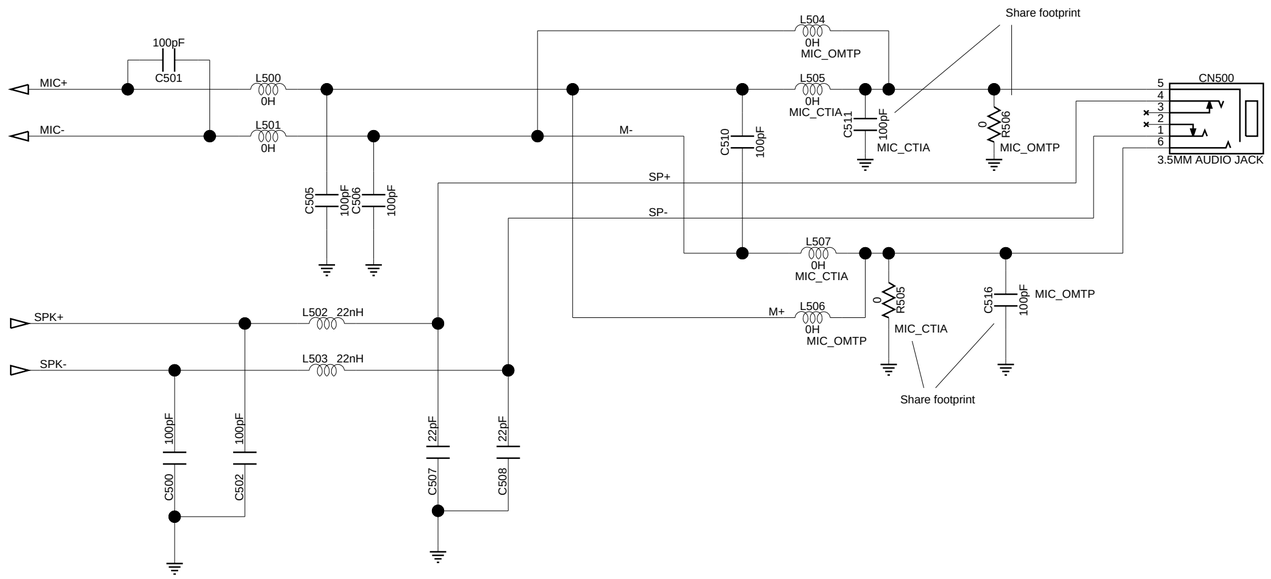

PCM Expansion #1

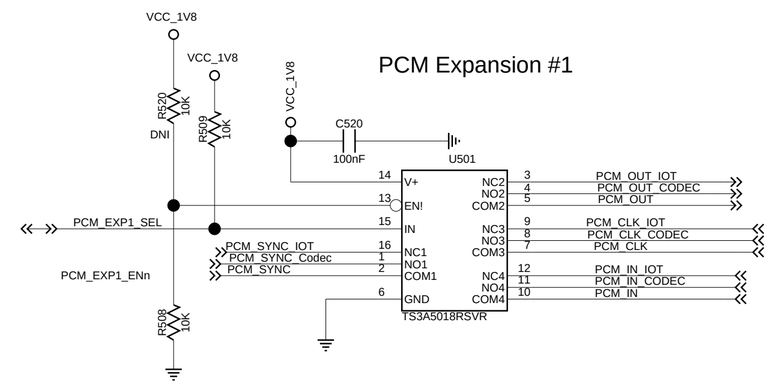

Default config = PCM to mangoh Red Codec

Audio Codec

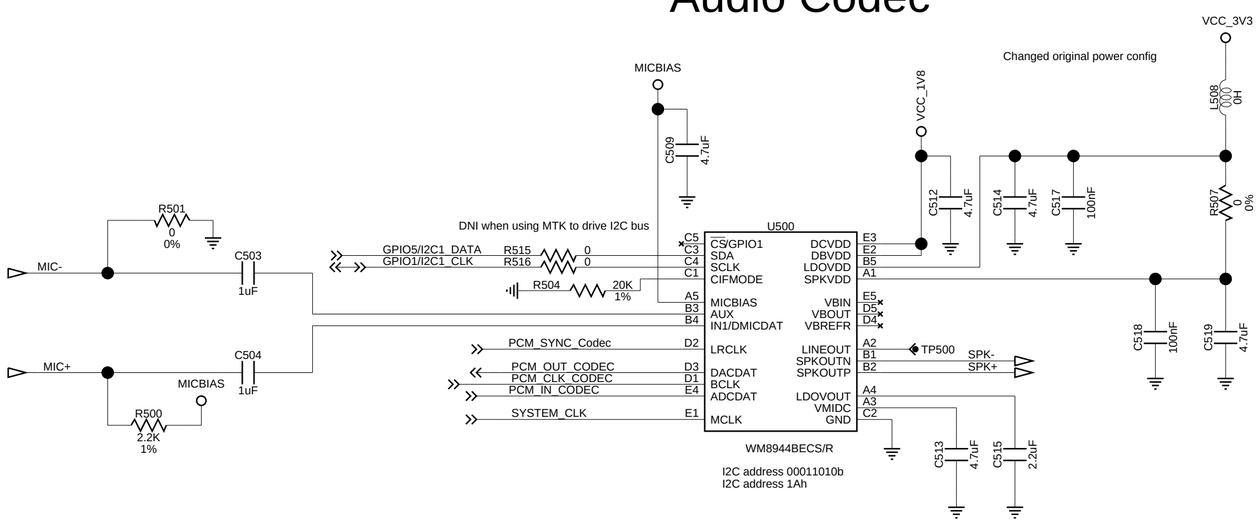

This document contains information which is proprietary to Sierra Wireless Inc. and is licensed pursuant to Creative Commons Attribution 4.0 International License.

Copyright (C) 2016

SIERRA WIRELESS™

SITE	CTO Office
LEAD ENGINEER	Ashish Syal
REV SCH	See P1
REV PCB	See P1
PROJECT	MANGO RED
DATE/TIME	16-12-2016_15:31
SCHEMATIC	2500927
PAGE	5 OF 10

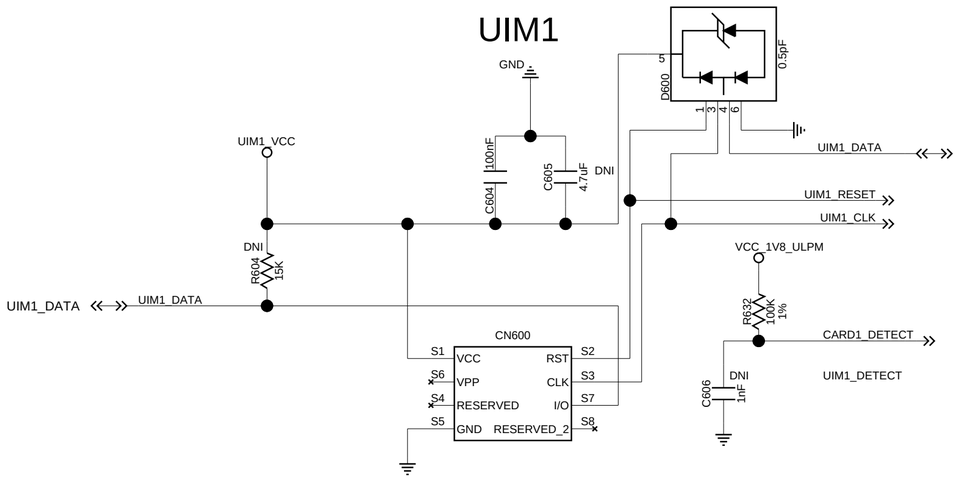

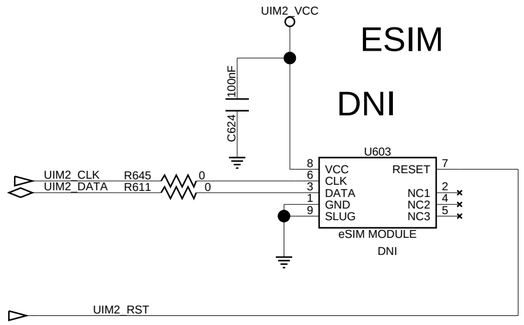

SIM card detected only if present at startup

SD CONNECTOR

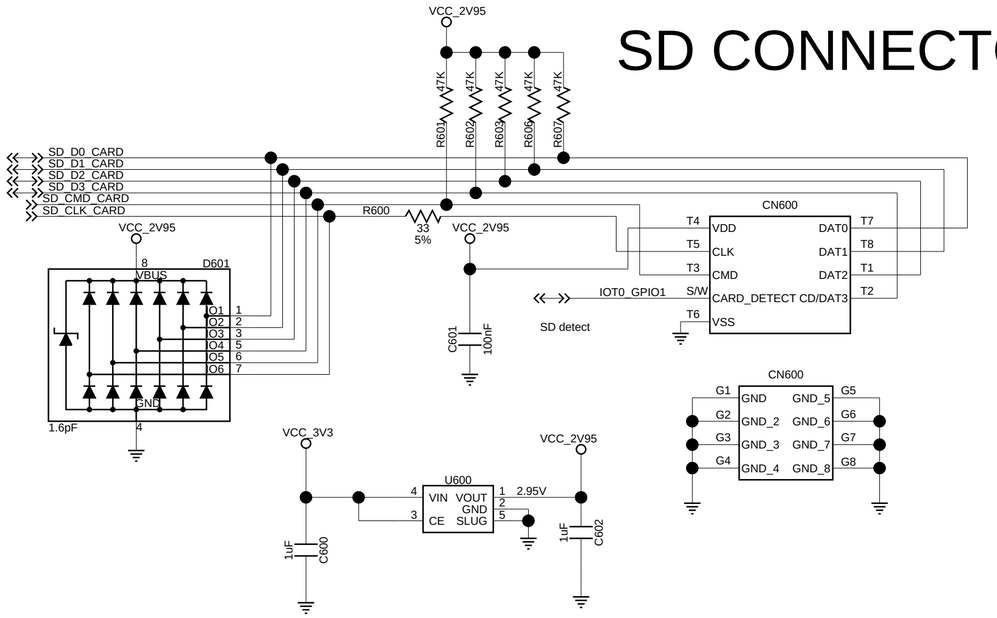

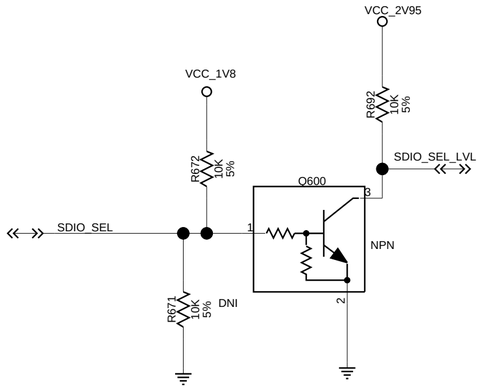

SDIO Expansion

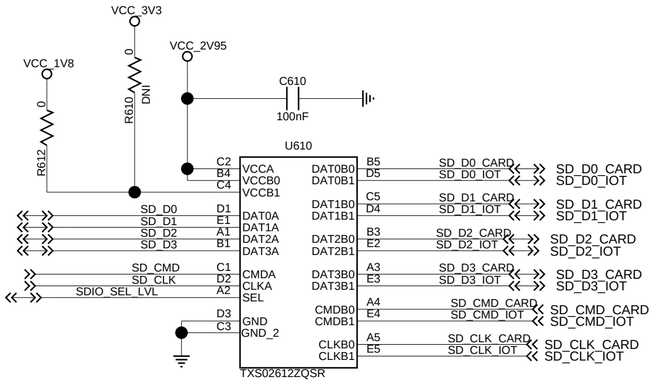

This document contains information which is proprietary to Sierra Wireless Inc. and is licensed pursuant to Creative Commons Attribution 4.0 International License.

Copyright (C) 2016

SIERRA WIRELESS™

SITE	CTO Office
LEAD ENGINEER	Ashish Syal
REV SCH	See P1
REV PCB	See P1
PROJECT	MANGO RED
DATE/TIME	14-09-2017_13:33
SCHEMATIC	2500927
PAGE	6 OF 10

GPIO Expander#1

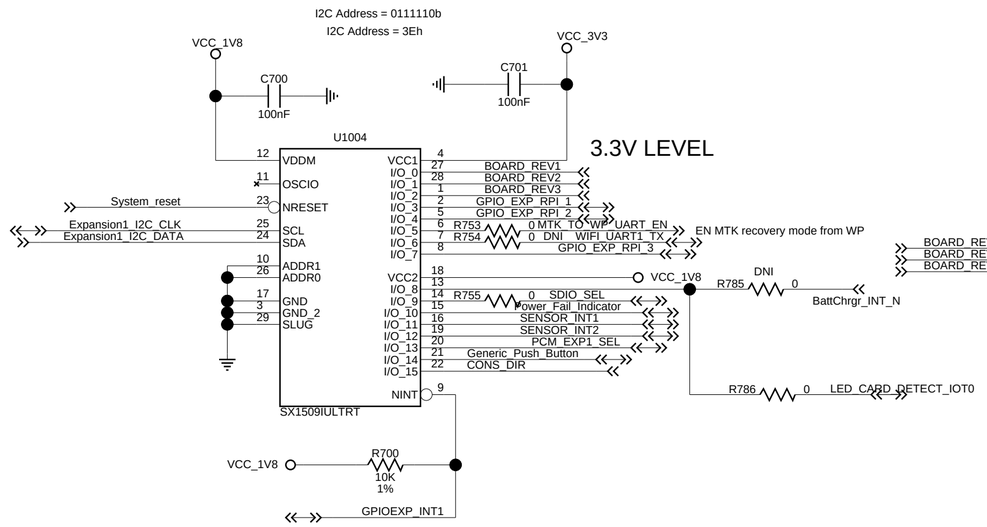

Board Rev

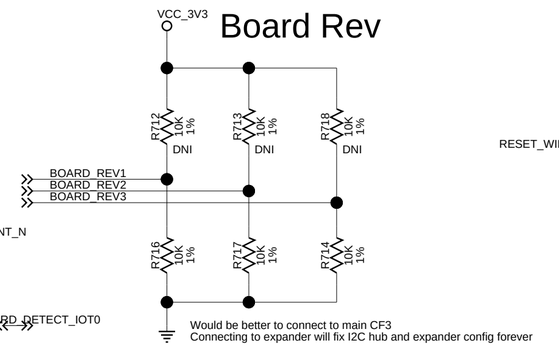

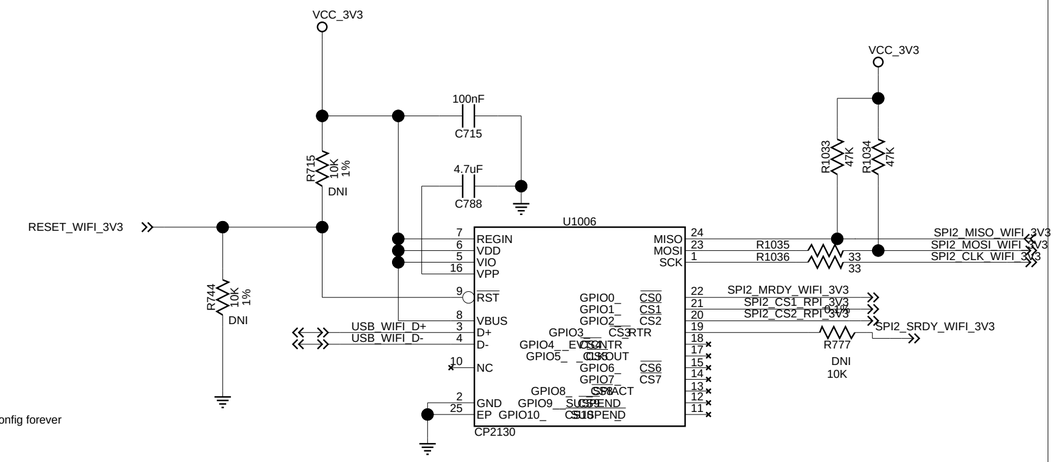

USB 3503

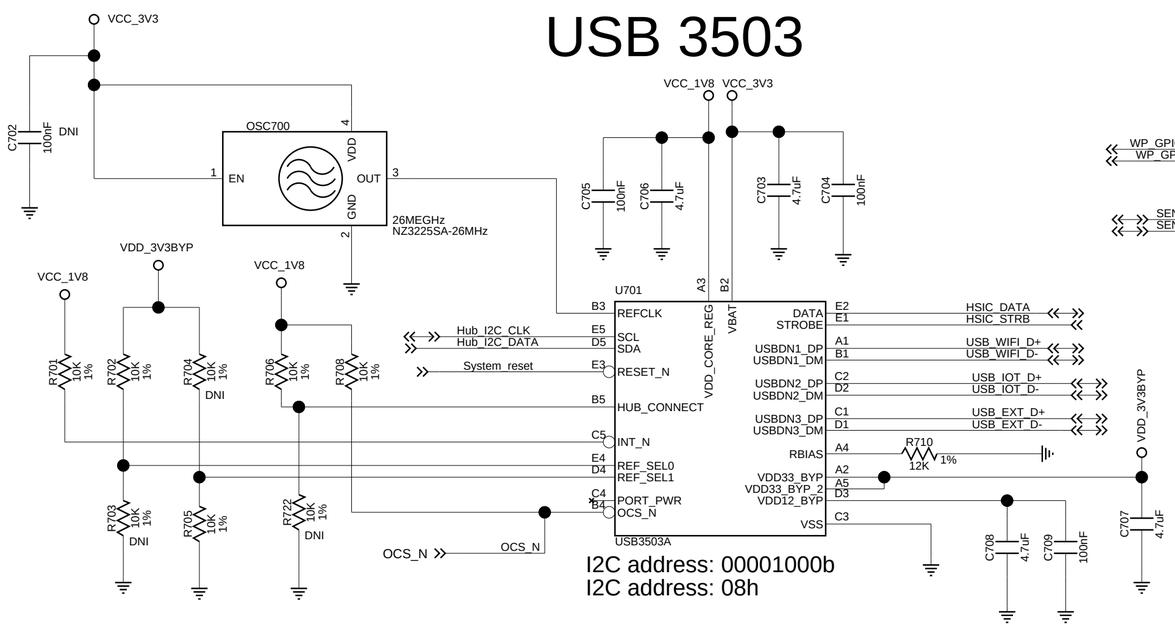

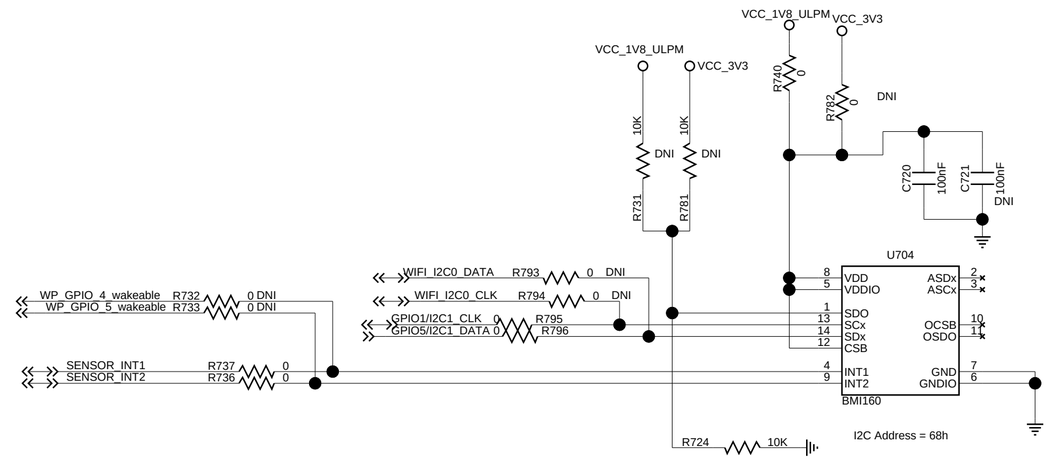

ACCELEROMETER AND GYROSCOPE

PRESSURE SENSOR

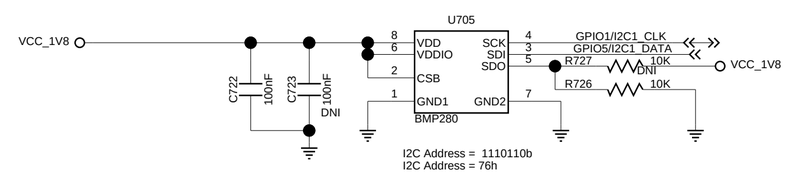

USB Downstream Power

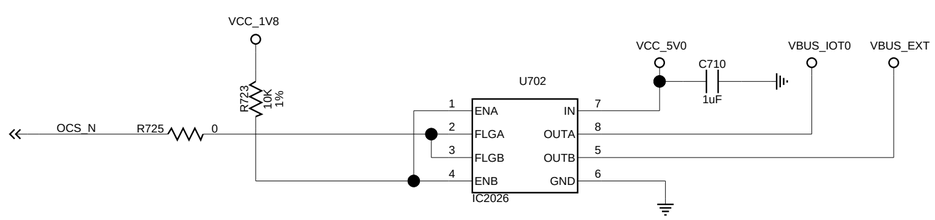

LIGHT SENSOR

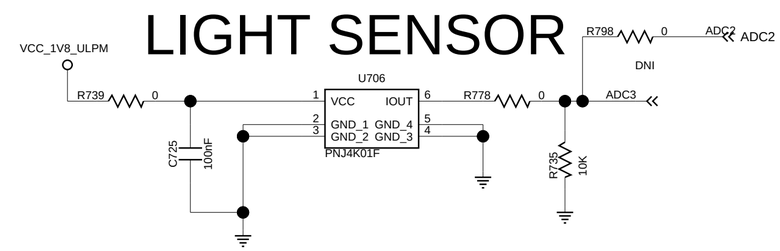

This document contains information which is proprietary to Sierra Wireless Inc. and is licensed pursuant to Creative Commons Attribution 4.0 International License.

Copyright (C) 2016

SIERRA WIRELESS™

SITE	CTO Office
LEAD ENGINEER	Ashish Syal
REV SCH	See P1
REV PCB	See P1
PROJECT	MANGO RED
DATE/TIME	14-09-2017_13:33
SCHEMATIC	2500927
PAGE	7 OF 10

Power can come from either
Main or uUSB-Power connectors

PSU Front End and 3.7V DC/DC converter

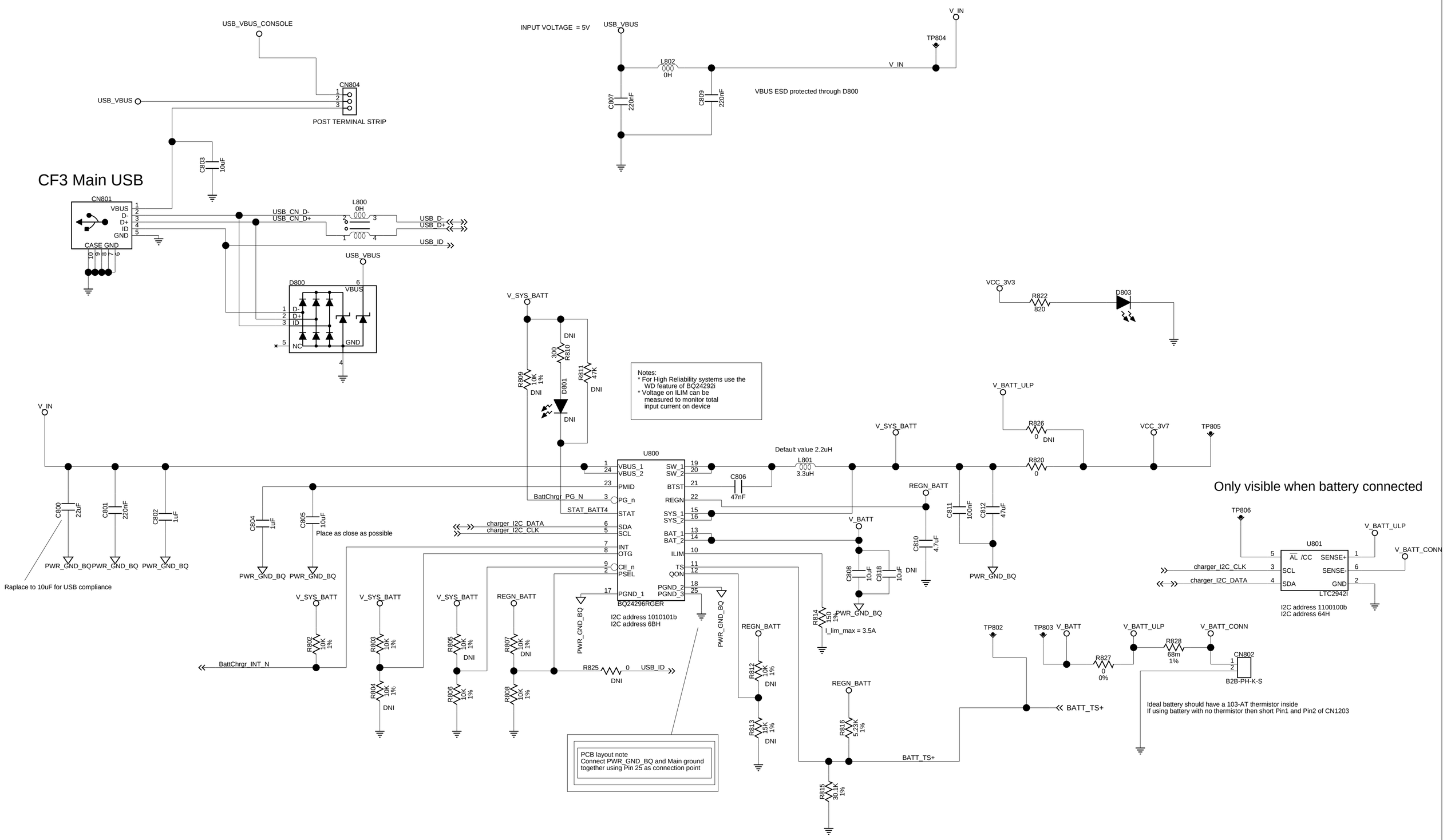

This document contains information which is proprietary to Sierra Wireless Inc. and is licensed pursuant to Creative Commons Attribution 4.0 International License.

Copyright (C) 2016

SIERRA WIRELESS™

SITE	CTO Office
LEAD ENGINEER	Ashish Syal
REV SCH	See P1
REV PCB	See P1
PROJECT	MANGO RED
DATE/TIME	14-09-2017_13:32
SCHEMATIC	2500927
PAGE	8 OF 10

3V3 and 1V8 Buck * 5V0 Boost

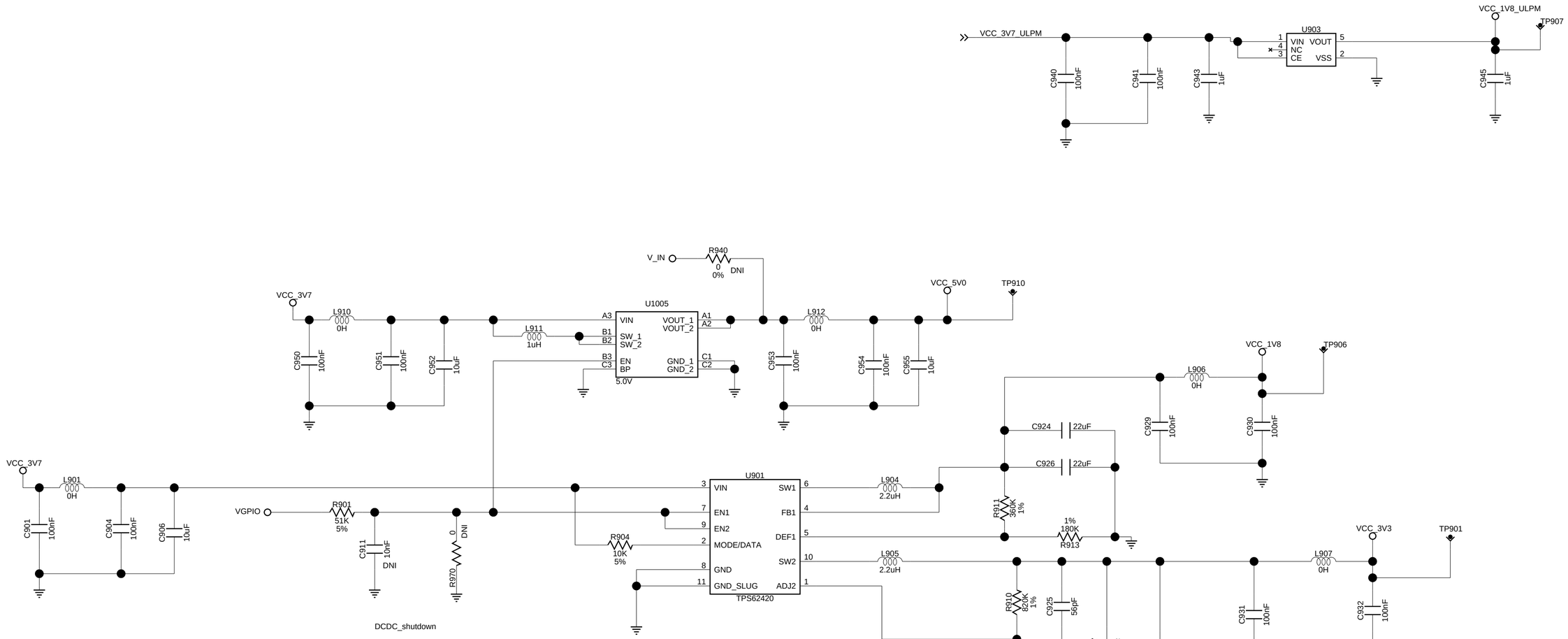

CF3 LDO

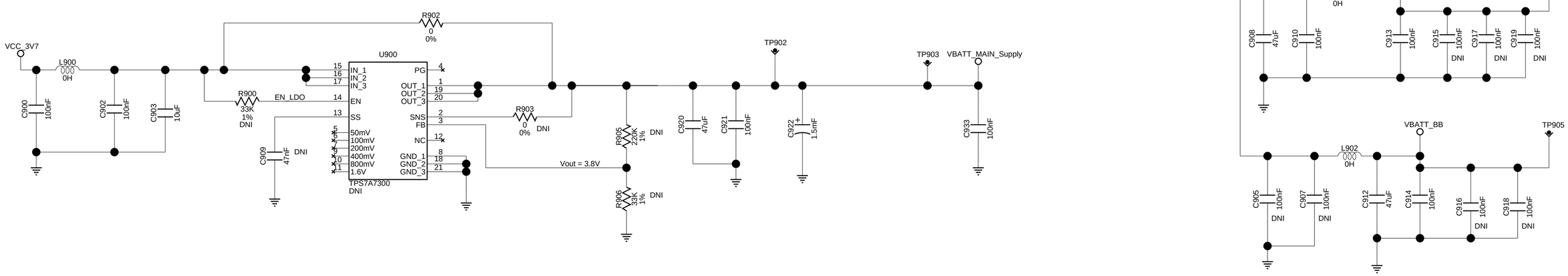

This document contains information which is proprietary to Sierra Wireless Inc. and is licensed pursuant to Creative Commons Attribution 4.0 International License.

Copyright (C) 2016

SIERRA WIRELESS™

SITE	CTO Office
LEAD ENGINEER	Ashish Syal
REV SCH	See P1
REV PCB	See P1
PROJECT	MANGO RED
DATE/TIME	12-01-2017_08:31
SCHEMATIC	2500927
PAGE	9 OF 10

RF SECTION

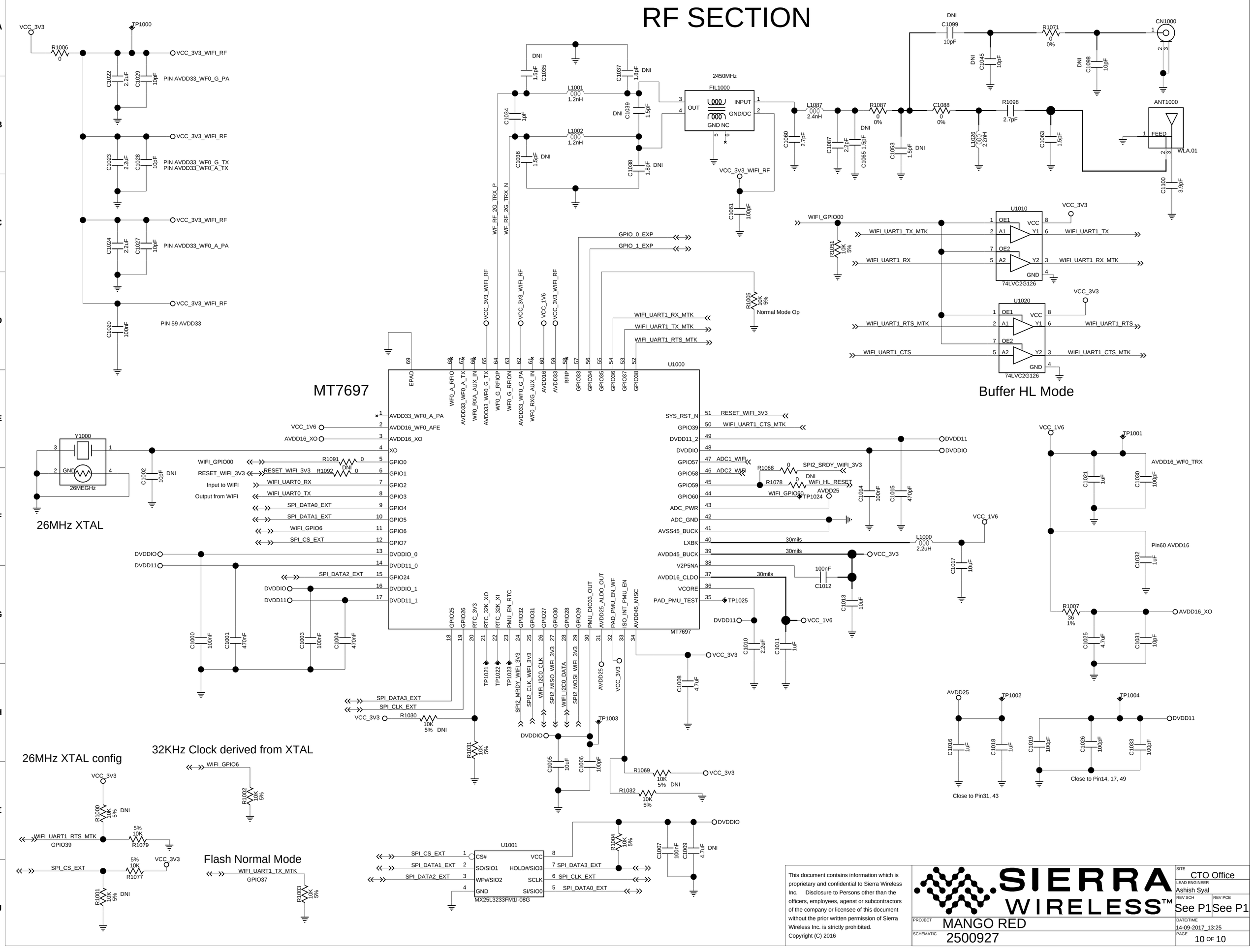

This document contains information which is proprietary and confidential to Sierra Wireless Inc. Disclosure to Persons other than the officers, employees, agenst or subcontractors of the company or licensee of this document without the prior written permission of Sierra Wireless Inc. is strictly prohibited.
Copyright (C) 2016

SIERRA WIRELESS™

SITE	CTO Office
LEAD ENGINEER	Ashish Syal
REV SCH	See P1
REV PCB	See P1
PROJECT	MANGO RED
SCHEMATIC	2500927
DATE/TIME	14-09-2017_13:25
PAGE	10 OF 10