8 Labels

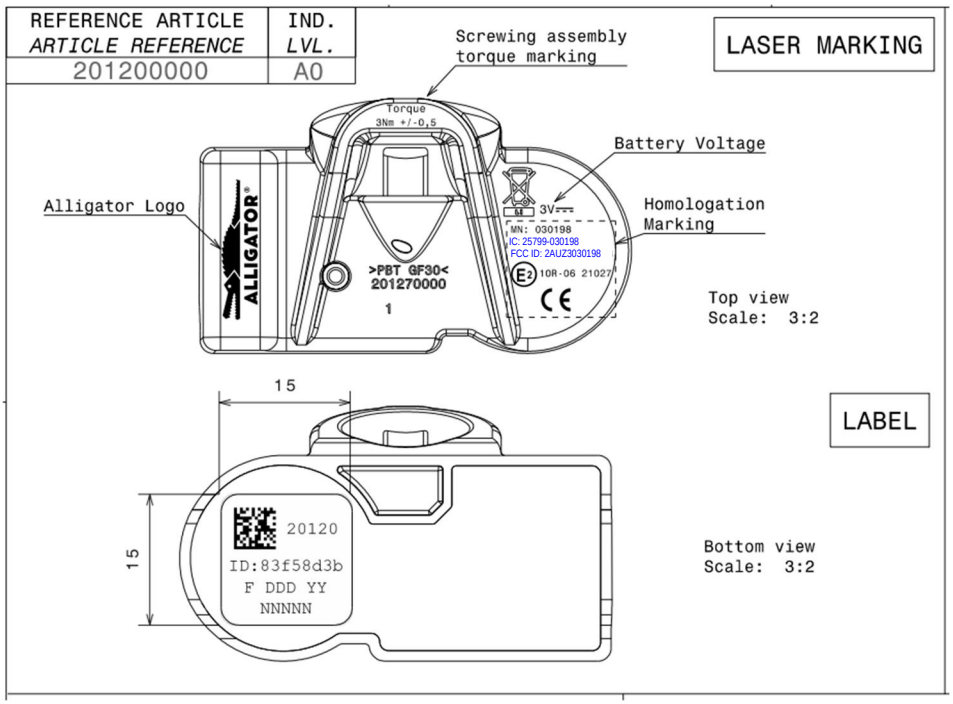

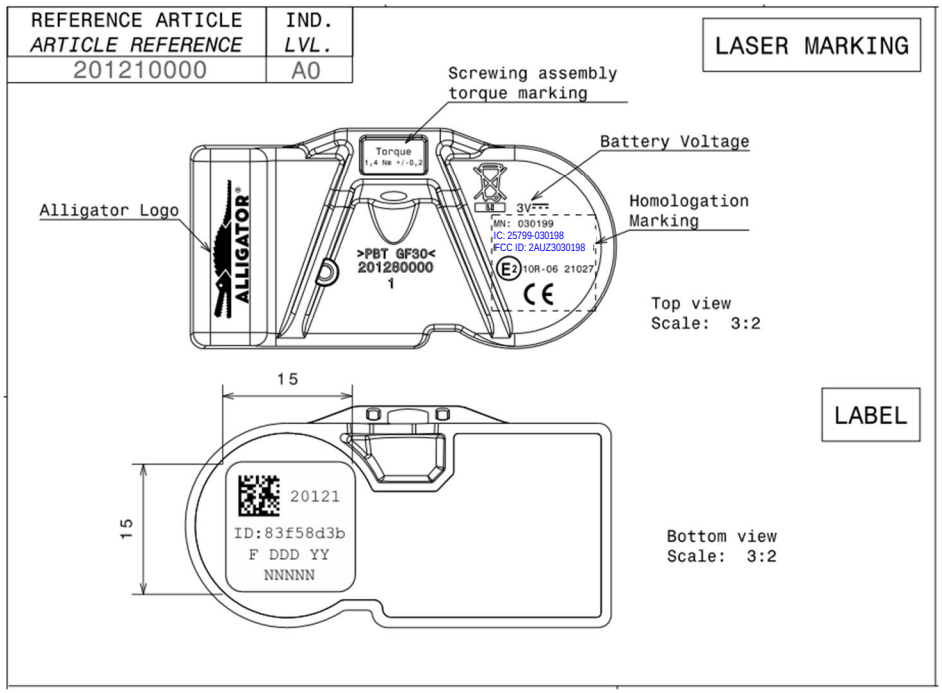

CONFIDENTIAL INFORMATION

This document is the exclusive property of LDL Technology S.A.S.

No content may be transmitted or reproduced in any form without written permission.