ORiNOCO® AP- 9200R

(Outdoor Access Point)

Safety & Regulatory Guide

ORINOCO by proxim® AN SRA COMPANY

Copyright

© 2021 Proxim Wireless Corporation, San Jose, CA. All rights reserved. Covered by one or more of the following U.S. patents: 5,231,634; 5,875,179; 6,006,090; 5,809,060; 6,075,812; 5,077,753. The content described herein are copyrighted with all rights reserved. No part of this publication may be reproduced, transmitted, transcribed, stored in a retrieval system, or translated into any language in any form by any means without the written permission of Proxim Wireless Corporation.

Trademarks

ORiNOCO®, Proxim, and the Proxim logo are the trademarks of Proxim Wireless Corporation. All other trademarks mentioned herein are the property of their respective owners.

Disclaimer

Proxim reserves the right to revise this publication and to make changes in content from time-to-time without obligation on the part of Proxim to provide notification of such revision or change.

GPL License Note

ORiNOCO® products include, in part, some free software that is developed by Free Software Foundation. A user is granted license to this software under the terms of either the GNU General Public License or GNU Lesser General Public License (See http://www.gnu.org/licenses/licenses.html). This license allows the user to freely copy, modify and redistribute this software and no other statement or documentation from us. To get a copy of this software, or for any other information, please contact our customer support team).

OpenSSL License Note

ORiNOCO® products contains software developed by the OpenSSL Project for use in the OpenSSL Toolkit (http://www.openssl.org/) and that is subject to the following copyright and conditions:

Copyright (c) 1998-2016 The OpenSSL Project. All rights reserved.

The names "OpenSSL Toolkit" and "OpenSSL Project" must not be used to refer to, endorse, or promote the products or for any other purpose related to the products without prior written permission. For written permission, please contact openssl-core@openssl.org.

This software is provided by the OpenSSL Project "as is" and any expressed or implied warranties, including, but not limited to, the implied warranties of merchantability and fitness for a particular purpose are disclaimed. In no event shall the OpenSSL Project or its contributors be liable for any direct, indirect, incidental, special, exemplary, or consequential damages (including, but not limited to, procurement of substitute goods or services; loss of use, data, or profits; or business interruption) however caused and on any theory of liability, whether in contract, strict liability, or tort (including negligence or otherwise) arising in any way out of the use of this software, even if advised of the possibility of such damage.

ORiNOCO® AP-9200R Outdoor Access Point - Safety and Regulatory Guide

Documentation Version: 1.0
P/N 765-00398, April 2021

Preface 4

1 AP-9200R - Regulatory Information 5

Safety Information (USA,Canada and European Union) 5

Federal Communications Commission (FCC) Compliance 6

Modifications 6

FCC Radiation Exposure Statement 7

Installation within TDWR Range 7

Industry Canada Compliance 7

Conformité Industry Canada 8

IC Radiation Exposure Statement 9

European (ETSI) Compliance 9

Countries of Operation and Conditions of Use 9

5 GHz Operation 9

Transmit Power Control (TPC) for 5 GHz operation 10

Certification Summary 10

ETSI (See ETSI - Certification) 10

USA (See USA - Certification) 10

Canada (See Canada - Certification) 10

UL (See UL - Certification) 10

CB (See CB - Test Certificate) 10

2 Information for Professional Installer 11

Information for Professional Installers 11

Adjusting Tx Output Power 11

Antenna Gain Configuration 13

A Canada - Certification 14

B USA - Certification 19

C ETSI - Certification 22

D UL - Certification 25

E CB - Test Certificate 28

Preface

About this Guide

This document contains the safety and regulatory compliance information for the following ORiNOCO® products:

- **ORiNOCO® Outdoor Access Point**
  - AP-9200R

Related Documents

In addition to this guide, you can refer to the following documents that are available on the Proxim's support site at http://my.proxim.com.

- **Quick Installation Guide (QIG)**: A quick reference guide that provides essential information for installing and configuring the device.
- **Device Management Guide**: A guide that gives an overview of the device user interface and explains the step-by-step procedure to configure, manage and monitor the device by using Graphical User Interface.
- **Software Configuration Guide**: A guide that provides software configuration information for Proxim devices.
- **Hardware Installation Guide**: A guide that provides a hardware overview and details about the installation procedures and hardware specifications.
- **CLI Guide**: A guide that gives instructions on how to configure, manage and monitor the device using Command Line Interface.

Proxim recommends you to visit its support site http://support.proxim.com for regulatory information and latest product updates.

AP-9200R - Regulatory Information

1

This chapter contains information on the following:

- Safety Information (USA,Canada and European Union)
- Federal Communications Commission (FCC) Compliance
- Industry Canada Compliance
- Certification Summary

1.1 Safety Information (USA,Canada and European Union)

Listed below are the product(s) and their corresponding safety standards that they comply with:

Product(s)	Standards
AP-9200R	IEC/EN 62368-1:2014(Second Edition) IEC/EN 60950-22:2016(Second Edition)

All products are intended to be installed, used, and maintained by experienced telecommunications personnel only.

When using these products, basic safety precautions should always be followed to reduce the risk of fire, electrical shock, and injury to persons, including the following:

- Devices must be installed and used in strict accordance with the manufacturer's instructions as described in the user documentation.
- Installation of these products in the end use must conform to local regulations and codes.
- Devices are to be used with and powered only by the Power Injector provided.
- A 16-amp circuit breaker is required at the power source.
- The devices are intended to be grounded. Use a 12 AWG earthing conductor at a minimum.
- Do not connect or disconnect the power cable from the device when the power injector is plugged into an AC power outlet.
- Devices should be serviced by trained personnels only. Do not disassemble the device. By opening or removing any covers, you may expose yourself to hazardous energy parts. Incorrect reassembly of these devices can cause malfunction and/or electric shock when later used. There are no user serviceable parts; all repairs and services must be handled by a qualified service center.
- Do not insert any objects of any shape or size inside these devices while powered on. Object may contact hazardous energy parts that could result in a risk of fire or personal injury.
- Do not remove or alter the marking label provided on these devices.
- To avoid the risk of electric shock from lightning, do not use these devices during an electrical storm.

WARNING: These devices are intended for installation in accordance with Articles 110-18, 110-26, and 110-27, 725, 800, and 810 of the United States National Electric Code ANSINFPA 70, and per the applicable Articles in the Canadian National Electric Code.

1.2 Federal Communications Commission (FCC) Compliance

The ORiNOCO® devices comply with the limits for a Class B digital device, pursuant to part 15 of the FCC Rules. These limits are designed to provide reasonable protection against harmful interference in a residential installation. This device generates, uses and can radiate radio frequency energy and, if not installed and used in accordance with the instructions, may cause harmful interference to radio communications. If this device causes harmful interference to radio or television reception, which can be determined by turning the device on and off, the user is encouraged to try to correct the interference by one or more of the following measures:

- Reorient or relocate the receiving antenna
- Increase the separation between the equipment and receiver
- Connect the equipment into an outlet on a circuit different from that to which the receiver is connected
- Consult the dealer or an experienced radio/TV technician for help

WARNING: To comply with FCC part 15 rules in the United States, the system must be professionally installed to ensure compliance with the Part 15 certification. It is the responsibility of the operator and professional installer to ensure that only certified systems are deployed in the United States. The use of the system in any other combination (such as co-located antennas transmitting the same information) is expressly forbidden.

The device operation is subject to the following two conditions:

1. The device may not cause harmful interference.
2. The device must accept any interference received, including interference that may cause undesired operation.

This device and its antenna(s) must not be co-located or operate in conjunction with any other antenna or transmitter.

The FCC radio-frequency exposure guidelines for an uncontrolled environment can be satisfied.

1.2.1 Modifications

The FCC requires the user to be notified that any changes or modifications to this device that are not expressly approved by the manufacturer may void the user's authority to operate the device. The correction of interference caused by unauthorized modification, substitution or attachment will be the responsibility of the user. The manufacturer and its authorized resellers or distributors are not liable for any damage or violation of government regulations that may arise from failing to comply with these guidelines.

WARNING: Modification of this device to receive cellular Radio Telephone service signals is prohibited under FCC Rules and Federal Law.

Modifications not expressly approved by the manufacturer could void the user authority to operate the equipment under FCC Rules.

1.2.2 FCC Radiation Exposure Statement

The ORiNOCO® devices comply with FCC radiation exposure limits set forth for an uncontrolled environment.

Tabulated below are the products and the FCC radiation exposure limits followed by the devices:

Product(s)	Standards
AP-9200R	• Product models using external antennas require professional installation. The antennas used for professional installation must be fixed-mounted on outdoor permanent structures with a minimum separation distance of 25 cm from the antenna to the users. Separation distance should be increased if antenna with more than 13 dBi is used. Separation distance can reach up to 260 cm for high gain (34 dBi @ 5 GHz and 18 dBi @ 2.4 GHz) antennas. • Antennas must not be co-located and must not operate in conjunction with any other antenna or transmitter.

1.2.3 Installation within TDWR Range

Before mounting and installing the device, please check the distance between the device location and the near by Terminal Doppler Weather Radar (TDWR). You can find the locations of the airport weather radars from the Wireless Internet Service Providers Association (WISPA) database at http://spectrumbridge.com/udrs/home.aspx. If the distance from the device to any TDWR is less than 35 kms, then the radio is not allowed to operate in channels closer than 30 MHz relative to the TDWR frequency (above and below). To protect these TDWR, the channels up to 30 MHz must be blacklisted so they cannot be selected as operational channel. In addition to blacklisting of the channels, register the location of the device radio in the WISPA database, so that any interference caused by the operation of the radio can be addressed in compliance with the Part 15 requirements.

For example: Consider the TDWR location at Phoenix, AZ operating at 5610 MHz (N 33 25 14; W 112 09 46). If the device is installed within 35 kms radial distance from this location then avoid operating in 5580 - 5640 MHz band. Also, blacklist all channels overlapping the 5580 - 5600 MHz band (5600 - 5650 is already removed from operation list of our device).

1.3 Industry Canada Compliance

The ORiNOCO® devices comply with Canadian ICES-003 and license-exempt RSS standard(s).

The device operation is subject to the following conditions:

- This device may not cause interference
- This device must accept any interference, including interference that may cause undesired operation of the device

WARNING:

- ***High-power radars are allocated as primary users (i.e. priority users) of the bands 5250-5350 MHz and 5650-5850 MHz and that these radars could cause interference and/or damage to LE-LAN devices.***

NOTES:

- This device and its antenna(s) must not be co-located or operated in conjunction with any other antenna or transmitter.

- Under Industry Canada regulations, the radio transmitter may only operate using an antenna of a type and maximum (or lesser) gain approved for the transmitter by Industry Canada. To reduce potential radio interference to other users, the antenna type and its gain should be so chosen that the equivalent isotropically radiated power (e.i.r.p.) is not more than that necessary for successful communication.
- The devices are designed to operate with disabled operation between 5600-5650 MHz within the 5470-5725 MHz band.
- The device automatically discontinues transmission in case of absence of information to transmit, or operational failure. Note that this is not intended to prohibit transmission of control or signaling information or the use of repetitive codes which is required by the technology.
- Any changes or modifications not expressly approved by the manufacturer could void the user's authority to operate these devices.
- This radio transmitter has been approved by Industry Canada to operate with the antenna types listed below with the maximum permissible gain. Antenna types not included in this list, and having a gain greater than the maximum gain indicated for that type, are strictly prohibited for use with this device.

Conformité Industry Canada

Les appareils Edge sont conformes aux normes canadiennes ICES-003 et RSS sans licence. Le fonctionnement de l'appareil est soumis aux conditions suivantes:

- Cet appareil ne doit pas provoquer d'interférences.
- Cet appareil doit accepter toute interférence, y compris les interférences qui peuvent provoquer un fonctionnement indésirable de l'appareil.

ATTENTION:

- **Les radars haute puissance sont attribués en tant qu'utilisateurs principaux (c'est-à-dire utilisateurs prioritaires) des bandes 5250-5350 MHz et 5650-5850 MHz. Ces radars pourraient provoquer des interférences et / ou endommager les appareils LE-LAN.**

REMARQUES:

- Cet appareil et son (ses) antenne(s) ne doivent pas être co-localisés ou utilisés avec une autre antenne ou un autre émetteur.
- En vertu de la réglementation d'Industrie Canada, l'émetteur radio ne peut fonctionner qu'avec une antenne d'un type et d'un gain maximum (ou moindre) approuvés pour l'émetteur par Industrie Canada. Pour réduire les interférences radio potentielles pour les autres utilisateurs, le type d'antenne et son gain doivent être choisis de telle sorte que la puissance isotrope rayonnée équivalente (p.i.r.e.) ne soit pas supérieure à celle nécessaire pour une communication réussie.
- L'appareil est désactivé entre 5600-5650 MHz dans la bande 5470-5725 MHz.
- L'appareil interrompt automatiquement la transmission en cas d'absence d'informations à transmettre ou de panne de fonctionnement. Notez que cela ne vise pas à interdire la transmission d'informations de commande ou de signalisation ou l'utilisation de codes répétitifs requis par la technologie.
- Tout changement ou modification non expressément approuvé par le fabricant peut annuler le droit de l'utilisateur à utiliser cet appareil.

Cet émetteur radio a été approuvé par Industrie Canada pour fonctionner avec les types d'antennes énumérés ci-dessous avec le gain maximum autorisé. Les types d'antennes non inclus dans cette liste, et ayant un gain supérieur au gain maximum indiqué pour ce type, sont strictement interdits d'utilisation avec cet appareil.

Frequency Band	Antenna Type	Maximum Gain (dBi)
(5.270 - 5.720) GHz / (5.470-5.725) GHz / (5.745-5.825) GHz	Panel	29.5
	Sector	21
	Omni Directional	13
(5.745 - 5.825) GHZ	Parabolic Dish	34

Frequency Band	Antenna Type	Maximum Gain (dBi)
(2.400 - 2.4835) GHz / (2.41 - 2.462) GHz	Sector	18
	Omni Directional	13

1.3.1 IC Radiation Exposure Statement

This device complies with IC RSS-102 radiation exposure limits set forth for an uncontrolled environment. The device should be installed and operated with a minimum distance of 30 cm between the antenna and the user. Under such configuration, the IC RSS-102 radiation exposure limits set forth for an population/uncontrolled environment can be satisfied. Minimum distance should be increased if antenna with more than 13 dBi is used. Minimum distance can reach up to 260 cm for high gain (34 dBi @ 5 GHz and 18 dBi @ 2.4 GHz) antennas.

Déclaration d'exposition aux radiations

Cet équipement est conforme aux limites d'exposition aux rayonnements IC RSS-102 établies pour un environnement non contrôlé. Cet équipement doit être installé et utilisé avec un minimum de 30 cm de distance entre la source de rayonnement et votre corps. Dans ces conditions, les limites d'exposition aux rayonnements IC RSS-102 établies pour un environnement non contrôlé peuvent être satisfaites. La distance minimum doit etre augmentée si une antenne avec un gain de plus de 13 dBi est utilisée. Cette distance minimum peut atteindre 260 cm pour des antennes de haut gain (34 dBi @ 5 GHz and 18 dBi @ 2.4 GHz).

1.4 European (ETSI) Compliance

The ORiNOCO® devices comply with the Low Voltage Directive (LVD) (2014/35/EU) and Radio Equipment Directive (2014/53/EU). Compliance with these directives implies conformity to harmonized European standards (European Norms).

1.4.1 Countries of Operation and Conditions of Use

The devices may be used in the following EU and EFTA countries: Austria, Belgium, Bulgaria, Cyprus, Czech Republic, Denmark, Estonia, Finland, France, Germany, Greece, Hungary, Iceland, Ireland, Italy, Latvia, Liechtenstein, Lithuania, Luxembourg, Malta, Netherlands, Norway, Poland, Portugal, Slovak Republic, Slovenia, Spain, Sweden, Switzerland and the United Kingdom.

The professional installer must use the configuration utility provided with the device to ensure that EIRP and the channels of operation are in conformance with the spectrum usage rules for EU and EFTA countries as described below.

1.4.2 5 GHz Operation

The installer must use the configuration utility provided with the device to ensure the channels of operation are in conformance with the spectrum usage rules.

The device employs a radar detection feature required for European Community and EFTA country operation in the 5 GHz band. This feature is automatically enabled when the country of operation is correctly configured for any European Community or EFTA country. The presence of nearby radar operation may result in temporary interruption of operation of this device. The radar detection feature will automatically restart operation on a channel free of radar.

1.4.3 Transmit Power Control (TPC) for 5 GHz operation

It is recommended not to disable ATPC on the device. However, if you wish to manually set TPC level, use professional installer services to ensure TPC level is set properly and complies with European regulatory requirements.

NOTE:

The TPC procedure should be repeated when relocating the wireless device within the current wireless network or to a wireless network in a new location.

1.5 Certification Summary

1.5.1 ETSI (See ETSI - Certification)

Models	Certification/Reference Number
AP-9200R	CE

1.5.2 USA (See USA - Certification)

Models	Frequency Band	Certification/Reference Number
AP-9200R	(2.400 - 2.462)GHz (5.150 - 5.250)Ghz (5.260 - 5.320)Ghz (5.500 - 5.720)Ghz (5.725 - 5.850)Ghz	HZB-NGPAP

1.5.3 Canada (See Canada - Certification)

Models	Frequency Band	Certification/Reference Number
AP-9200R	(2.400 - 2.4835)GHz (5.260 - 5.320)Ghz (5.500 - 5.720)Ghz (5.725 - 5.850)Ghz	1856A-NGPAP

1.5.4 UL (See UL - Certification)

Models	Certification/Reference Number
AP-9200R	Pending Certificate

1.5.5 CB (See CB - Test Certificate)

Models	Certification/Reference Number
AP-9200R	Pending Certificate

Information for Professional Installer

2

This chapter contains information on the following:

- Information for Professional Installers
  - Adjusting Tx Output Power
  - Antenna Gain Configuration

2.1 Information for Professional Installers

All products must be professionally installed, and the transmit power of the system must be adjusted by the professional installers to ensure that the system EIRP is in compliance with the limit specified by the regulatory authority of the country of application.

2.1.1 Adjusting Tx Output Power

NOTE: *When the system is set to transmit at the maximum power, professional installers must ensure that the maximum EIRP limit is not exceeded. To achieve this, they may have to add attenuation between the device and the antenna when a high gain antenna is used.*

Use the following formula in combination with the table of EIRP limits in US and EU countries to calculate system transmit power (based on EIRP limits) of these countries:

Tx Power (dBm) = EIRP Limit (dBm) + FL (dB) – G (dB)

where,

Tx Power = Output power measured at the antenna input

EIRP Limit = EIRP limits specified below

FL = Feeder loss including loss of connectors

G = Antenna Gain

Transmit output power can be reduced by using **Automatic Transmit Power Control (ATPC),** or manually setting the **Transmit Power Control (TPC)**. For information to automatically or manually set TPC, refer to **Software Management Guide** available at http://my.proxim.com.

Regulatory Domain	Frequency (MHz)	Max EIRP (dBm)	
		PTP Mode (QB)	PTMP Mode(MP)
US SKU			
United States 5GHz	5150 ~ 5250 (Non-DFS)	53	36(End Point A), 53(End Point B)
	5250 ~ 5350 (DFS)		
	5500 ~ 5600 (DFS)		
	5650 ~ 5725 (DFS)		
	5725 ~ 5850 (Non-DFS)		
United States 5.8GHz	5725 ~ 5850 (Non-DFS)	53	36(End Point A), 53(End Point B)

United States1 (5.3, 5.4 GHz)	5250 ~ 5350 (DFS)	30	30
	5500 ~ 5600 (DFS)		
	5650 ~ 5725 (DFS)		
United States2 (5.3, 5.8 GHz)	5250 ~ 5350 (DFS)	53	36(End Point A), 53(End Point B)
	5725 ~ 5850 (Non-DFS)		
United States3 (5.2, 5.8 GHz)	5150 ~ 5250 (Non-DFS)	53	36(End Point A), 53(End Point B)
	5725 ~ 5850 (Non-DFS)		

Regulatory Domain	Frequency (MHz)	Max EIRP (dBm)	
		PTP Mode (QB)	PTMP Mode(MP)
WD SKU			
World 5 GHz	5150 ~ 5925 (Non-DFS)	100	100
United States 5GHz	5150 ~ 5250 (Non-DFS)	53	36(End Point A), 53(End Point B)
	5250 ~ 5350 (DFS)		
	5500 ~ 5600 (DFS)		
	5650 ~ 5725 (DFS)		
	5725 ~ 5850 (Non-DFS)		
United States 5.8GHz	5725 ~ 5850 (Non-DFS)	53	36(End Point A), 53(End Point B)
United States1 (5.3, 5.4 GHz)	5250 ~ 5350 (DFS)	30	30
	5500 ~ 5600 (DFS)		
	5650 ~ 5725 (DFS)		
United States2 (5.3, 5.8 GHz)	5250 ~ 5350 (DFS)	53	36(End Point A), 53(End Point B)
	5725 ~ 5850 (Non-DFS)		
United States3 (5.2, 5.8 GHz)	5150 ~ 5250 (Non-DFS)	53	36(End Point A), 53(End Point B)
	5725 ~ 5850 (Non-DFS)		
Canada 5 GHz	5250 ~ 5350 (DFS)	30	30
	5470 ~ 5600 (DFS)		
	5650 ~ 5725 (DFS)		
Europe 5.4 GHz	5470 ~ 5600 (DFS)	30	30
	5650 ~ 5725 (DFS)		
Europe 5.8 GHz	5725 ~ 5875 (DFS)	36	36

IMPORTANT! You must add external attenuation pad if the calculated EIRP is over the limit. If you are at the TPC limit, reduce the power and continue with the attenuation.

2.1.2 Antenna Gain Configuration

When using external antenna, the professional installer should ensure to configure proper antenna gain so that the radio does not exceed the EIRP allowed per regulatory domain.

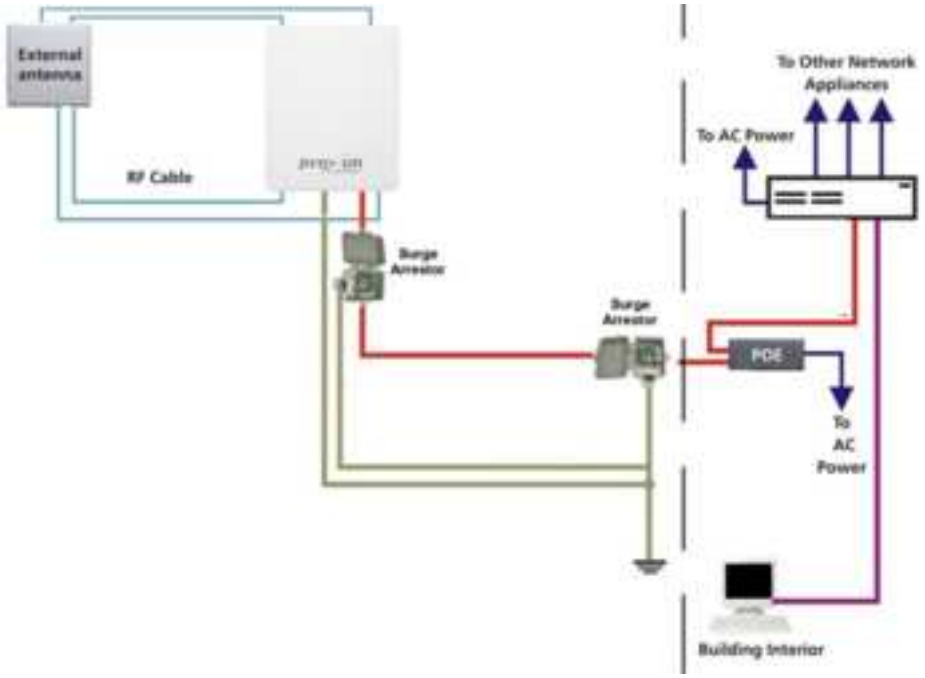

Calculate the antenna gain as follows:

Antenna Gain to be configured = **Antenna Gain of the antenna used** - **Cable Loss**

Example: Consider an example where the device is operating in United States 5.3 GHz with the EIRP 30 dBm. The antenna gain of the antenna used is 23 dBi and the cable loss is 1dB.

Given this case, Configurable Antenna Gain = [23 dBi – 1 dB] = 22 dBi

Maximum Radio Power = EIRP – Configured Antenna Gain

= 30 dBm – 22 dBi

= 8 dBm

With this configuration, the ATPC feature will limit the radio power to a maximum of 8 dBm to avoid exceeding EIRP limit of 30 dBm.

Canada - Certification

A

Given below are the **Industry Canada** certification details for the following product:

- AP-9200R

USA - Certification

B

Given below are the USA certification details for the following product:

- AP-9200R

ETSI - Certification

C

Given below is the product with the ETSI Certification:

- AP-9200R

UL - Certification

D

Given below is the product with the authorization to use UL Mark:

- AP-9200R

CB - Test Certificate

E

Given below is the CB Test certification for the following product:

- AP-9200R