Brighton Design
Rev 3 A/W., May 1, 1998
Modified DSS chassis and Rev B power supply

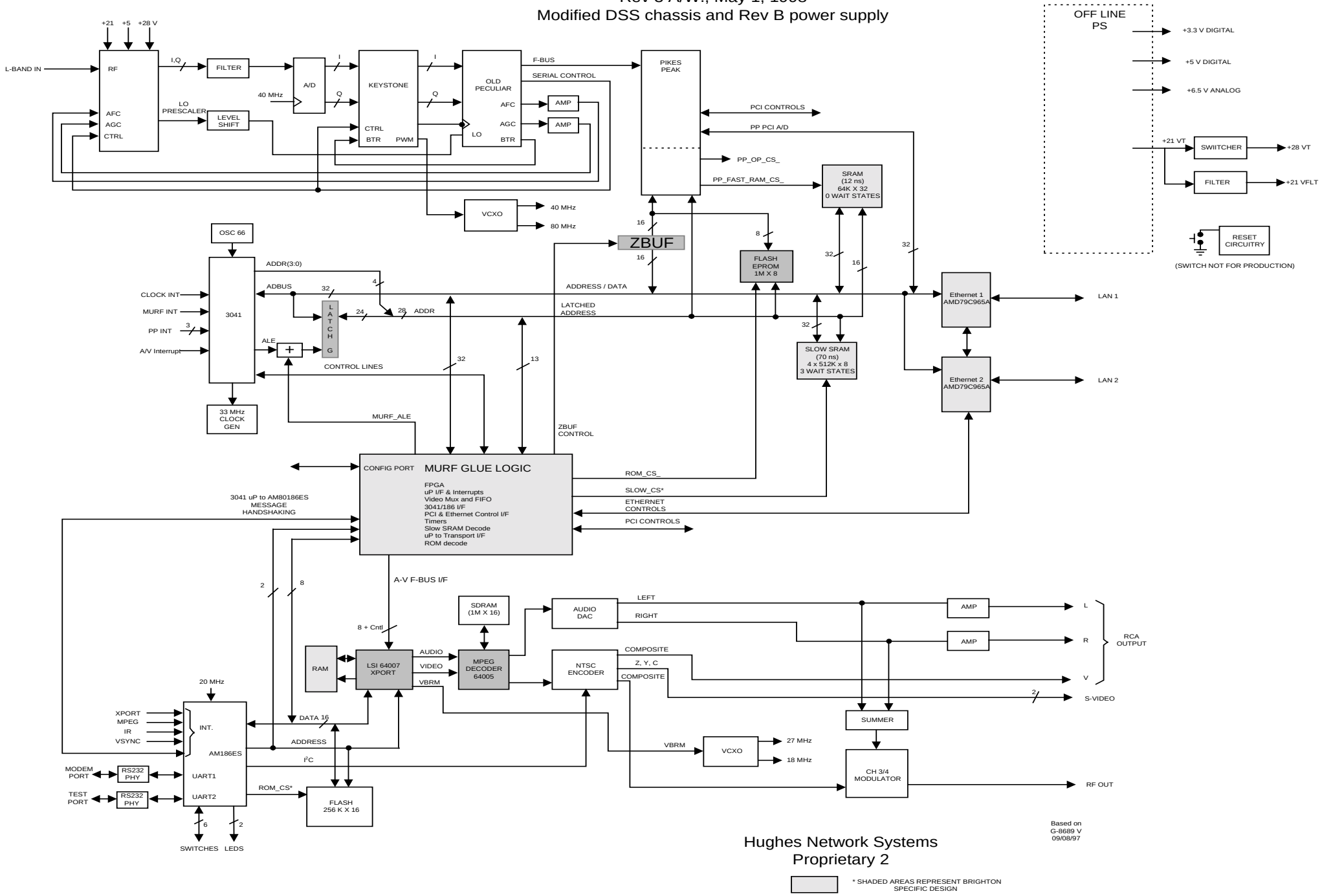

Based on
G-8689 V
09/08/97

Hughes Network Systems
Proprietary 2

* SHADED AREAS REPRESENT BRIGHTON SPECIFIC DESIGN