	IC400
0-10, 0-11, 3-01, 3-02	S-AU27AM(K3)
0-14, 3-03, 3-04	S-AU27AL(K3)
2-71, 2-72, ⚠ 2-73, 2-74	M57729H-22
0-12, 0-13	S-AU27AH(K1)
0-15, 0-16, 3-05	M68769H-22
0-17	M68769SH
0-18, 3-07	M68769L

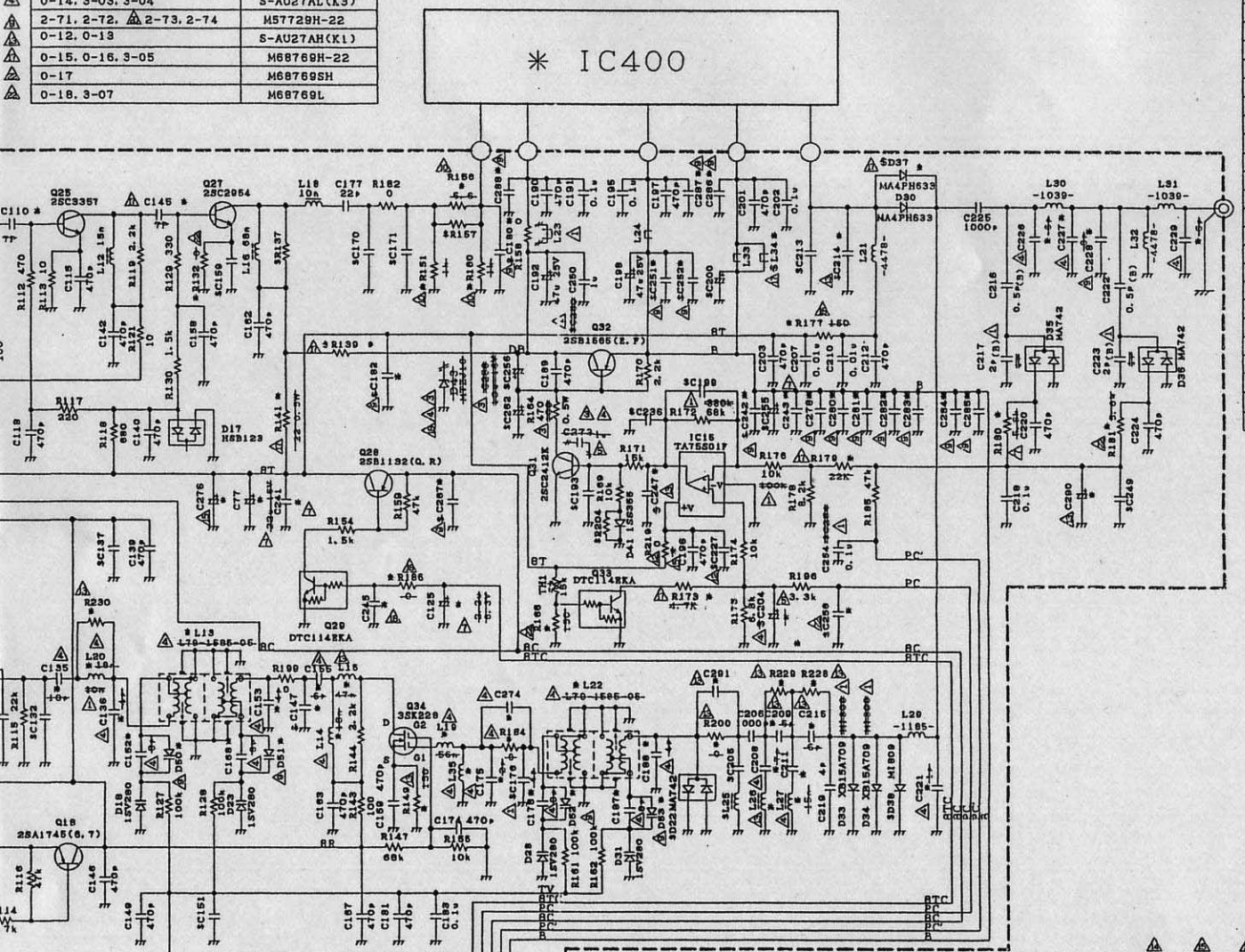

USE FOR	SYMBOL	REVISION NO		CODE	ISSUED	DATE
X57-596*-**	⚠ X 15	33906	33955		T. Matsuoka	99-08-20
	⚠ X 3	34169	34191		T. Matsuoka	99-09-02
	⚠ X 4	34264	34317		W. Fukiya	99-09-09
	⚠ X 65	改版設完			T. ONUKI	99-09-24
	⚠ X 4	34693			W. Fukiya	99-09-28
	⚠ X 1	34993			W. Fukiya	99-10-20
	⚠ X 28	35222			W. Fukiya	99-11-02
	⚠ X 2	35312			W. FUKIYA	99-11-08
	⚠ X 102	改版設完			K. MIYAZAKI	99-11-25
	⚠ X 8	35564			W. FUKIYA	1999-12-06
	⚠ X 4	35690			W. FUKIYA	1999-12-09
	⚠ X 19	35832			T. ONUKI	2000-01-07
	⚠ X 40	改版設完			K. TOOTA	2000-01-26
	⚠ X 4	36296	36383		T. Matsuoka	2000-02-01
	⚠ X 14	36591			T. Matsuoka	2000-02-22
	⚠ X 16	36709			T. Matsuoka	2000-02-28
	⚠ X 24	改版設完			Y. KUBO	2000-03-28
	⚠ X 14	37534			W. FUKIYA	2000-04-25
	⚠ X 11	37464	37815		W. FUKIYA	2000-05-15
	⚠ X 11	改版設完			W. FUKIYA	2000-07-27
	⚠ X 3	39200			T. Matsuoka	2000-08-08
	⚠ X 21	改版設完			Y. KUBO	2000-08-31
	X					
	X					
	X					

	Q15	Q35	CP1	CF2	R151	R156	R160	R210	W1	R219	R221	R228	R229	R230	C147	C209	C211	C214	C215	C247	C291	R149
0-10	3SK228	DTC144EKA	L72-0959	L72-0973	1k	5.6	1k	22k	O	#1	#1	-	-	-	-	5p	18p	-	6p	-	-	150
0-11	3SK228	DTC144EKA	L72-0959	L72-0973	1k	5.6	1k	22k	O	#1	#1	-	-	-	-	5p	18p	-	6p	-	-	150
3-01	3SK228	DTC144EKA	L72-0959	L72-0973	1k	5.6	1k	22k	O	#1	#1	-	-	-	-	5p	18p	-	6p	-	-	150
3-02	3SK228	DTC144EKA	L72-0959	L72-0973	1k	5.6	1k	22k	O	#1	#1	-	-	-	-	5p	18p	-	6p	-	-	150
0-14	3SK228	DTC144EKA	L72-0959	L72-0973	390	12	390	22k	O	#1	#1	-	-	-	-	5p	18p	-	6p	-	-	150
3-03	3SK228	DTC144EKA	L72-0959	L72-0973	390	12	390	22k	O	#1	#1	-	-	-	-	5p	18p	-	6p	-	-	150
3-04	3SK228	DTC144EKA	L72-0959	L72-0973	390	12	390	22k	O	#1	#1	-	-	-	-	5p	18p	-	6p	-	-	150
⚠ 2-71	SGM2014AM	-	-	L72-0973	1k	5.6	1k	22k	#2	O	O	-	-	-	-	5p	18p	-	6p	-	-	150
⚠ 2-72	SGM2014AM	-	-	L72-0959	1k	5.6	1k	22k	#2	O	O	-	-	-	-	5p	18p	-	6p	-	-	150
⚠ 0-12	3SK228	DTC144EKA	L72-0959	L72-0973	1k	5.6	1k	O	#2	O	O	O	O	O	1.5p	-	-	1p	-	1000p	10p	-
⚠ 0-13	3SK228	DTC144EKA	L72-0959	L72-0973	1k	5.6	1k	O	#2	O	O	O	O	O	1.5p	-	-	1p	-	1000p	10p	-
⚠ 0-15	3SK228	DTC144EKA	L72-0959	L72-0973	1k	5.6	1k					-	-	-	-	5p	18p	-	6p	-	-	150
⚠ 0-16	3SK228	DTC144EKA	L72-0959	L72-0973	1k	5.6	1k					-	-	-	-	5p	18p	-	6p	-	-	150
⚠ 3-05	3SK228	DTC144EKA	L72-0959	L72-0973	1k	5.6	1k					-	-	-	-	5p	18p	-	6p	-	-	150
⚠ 2-73	SGM2014AM	-	-	L72-0973	1k	5.6	1k					-	-	-	-	5p	18p	-	6p	-	-	150
⚠ 2-74	SGM2014AM	-	-	L72-0959	1k	5.6	1k					-	-	-	-	5p	18p	-	6p	-	-	150